STEAM BOILER WITH McDONNELL & MILLER LOW WATER CUT OFF

SCHEMATIC WIRING DIAGRAM

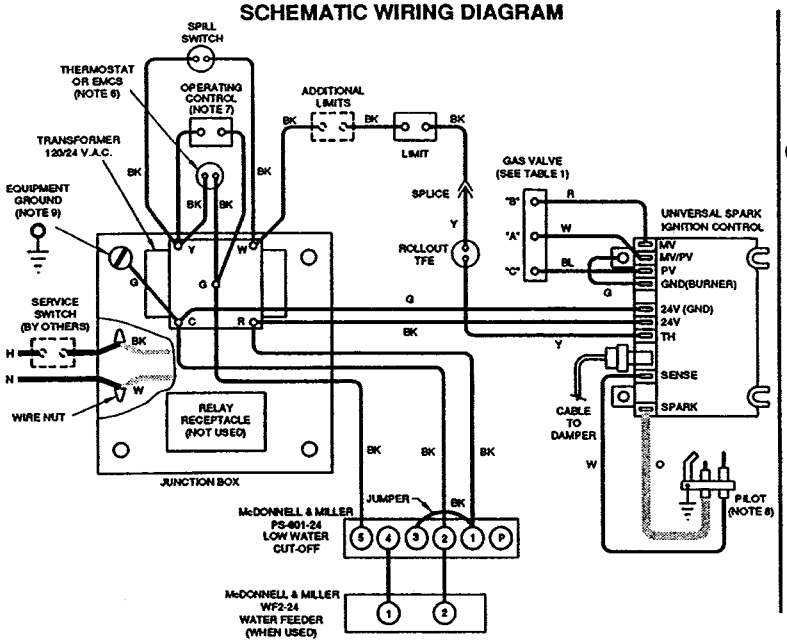

LADDER WIRING DIAGRAM

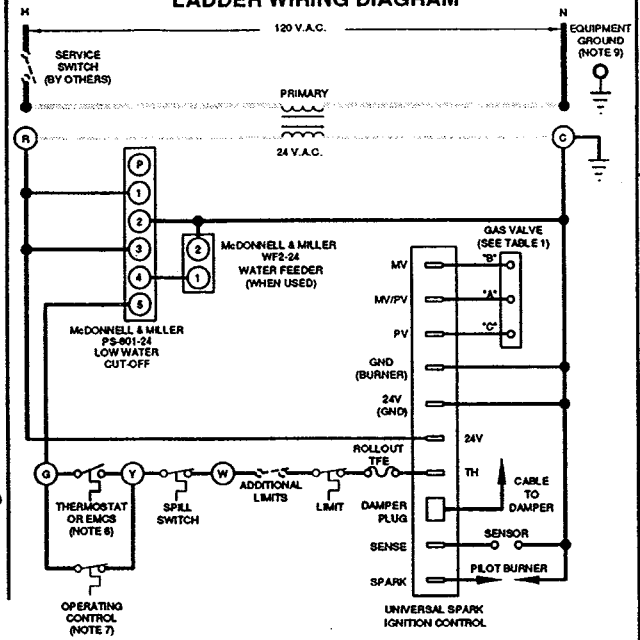

STEAM BOILER WITH HYDROLEVEL LOW WATER CUT OFF

SCHEMATIC WIRING DIAGRAM

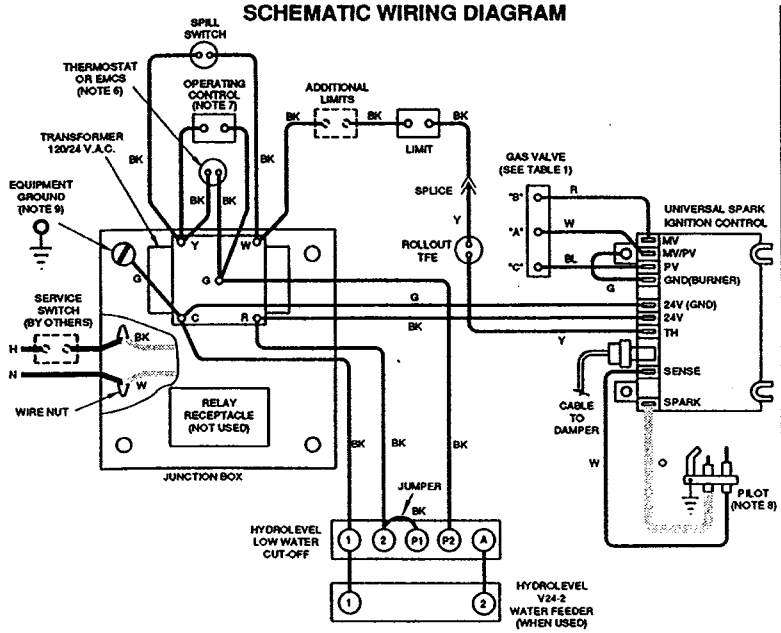

LADDER WIRING DIAGRAM

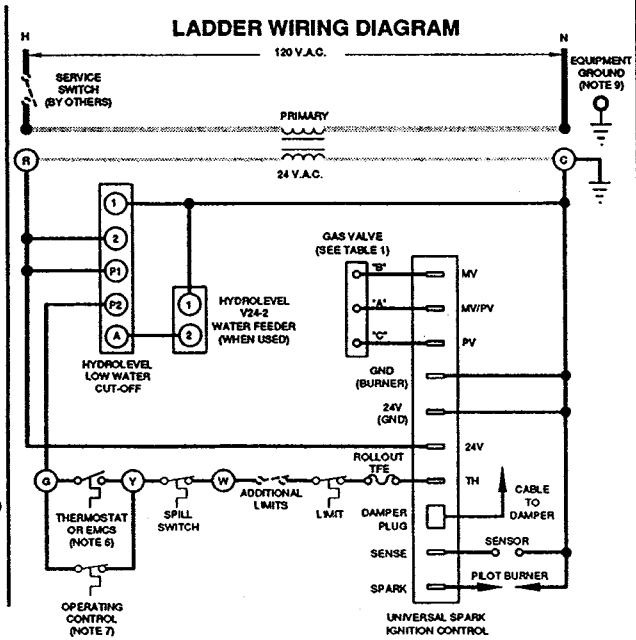

EG
30 thru 75

- Intermittent Pilot
- Natural Gas
- Steam, With or Without Tankless Heater
- Probe Type Low Water Cut Off

NOTES

WARNING

ELECTRICAL SHOCK HAZARD, CAN CAUSE SEVERE INJURY OR DEATH. DISCONNECT POWER BEFORE INSTALLING AND/OR SERVICING.

1. ALL WIRING MUST BE INSTALLED IN ACCORDANCE WITH:
   A. U.S.A. - NATIONAL ELECTRICAL CODE AND ANY OTHER NATIONAL, STATE, OR LOCAL CODE REQUIREMENTS HAVING JURISDICTION.
   B. CANADA - C.S.A. C22.1 CANADIAN ELECTRICAL CODE PART 1 AND ANY OTHER NATIONAL, PROVINCIAL, OR LOCAL CODE REQUIREMENTS HAVING JURISDICTION.
2. ALL WIRING MUST BE:
   A. U.S.A. - N.E.C. CLASS 1.
   B. CANADA - C.S.A. C22.1 C.E.C. PART 1.
3. IF ORIGINAL ROLLOUT TFE WIRE AS SUPPLIED WITH THE APPLIANCE MUST BE REPLACED, TYPE 200°C WIRE OR ITS EQUIVALENT MUST BE USED. IF OTHER ORIGINAL WIRE AS SUPPLIED WITH THE APPLIANCE MUST BE REPLACED, TYPE 105°C OR ITS EQUIVALENT MUST BE USED.
4. REFER TO CONTROL COMPONENT INSTRUCTIONS PACKED WITH BOILER FOR APPLICATION INFORMATION.
5. ALL CONTACTS SHOWN WITHOUT POWER APPLIED - OFF SHELF CONDITION.
6. THERMOSTAT - SET ANTICIPATOR TO MATCH AMPERE DRAW OF GAS VALVE PLUS IGNITION CONTROL MODULE.
   EMCS - FOR EMCS CONNECTION IN PLACE OF THERMOSTAT, REFER TO EMCS INSTALLATION/OPERATING MANUAL.
7. REQUIRED WITH TANKLESS HEATER.
8. PILOT LEADWIRES ARE NOT FIELD REPLACEABLE. REPLACE PILOT ASSEMBLY IF NECESSARY.
9. ⏚ DENOTES FIELD INSTALLED CHASSIS GROUND.

TABLE 1: GAS VALVE TERMINAL DESIGNATIONS

GAS VALVE MODEL	"A"	"B"	"C"
HONEYWELL VR8440	TR	TH	TH-TR
HONEYWELL VR8204, VR8304	MV/PV	MV	PV
WHITE-RODGERS 36E	2	1	3
WHITE-RODGERS 36C	2-4 *	1	3
ROBERTSHAW 7200	C	M	P

* FACTORY JUMPERED

LOW VOLTAGE FIELD
HIGH VOLTAGE FIELD
LOW VOLTAGE FACTORY
HIGH VOLTAGE FACTORY
IGNITION CABLE

WEIL-McLAIN
A Division of The Marley Company
Michigan City, Indiana 46360

PART NUMBER 550-224-100/0392WM