WEIL-McLAIN

EVERGREEN® Pro

110/155/220/299/300/399 Series 2
Condensing Gas Boiler

Boiler Manual

- Installation
- Startup
- Maintenance
- Parts

⚠ WARNING

This manual must only be used by a qualified heating installer/service technician. Read all instructions, including this manual and all other information shipped with the boiler, before installing. Perform steps in the order given. Failure to comply could result in severe personal injury, death or substantial property damage.

Part number 550-100-579/0526

Contents

Abbreviations 3
Tools 3

Section 1 - Safety

Hazard Definitions 5
Please Read Before Proceeding 6

Section 2 - Installation

The Evergreen® Pro Gas-fired Water Boilers 8
The EVG 110 Gas-fired Water Boilers 9
The EVG 155 Gas-fired Water Boilers 10
The EVG 220-399 Gas-fired Water Boilers 11
Boiler Location 12
Prepare Boiler Location 15
Wall-Mounting the Boiler. 16
Floor Stand Assembly- EVG 110-155. 19
Boiler Hydrostatic Test 20
Converting Boiler to Propane - EVG 110 22
Converting Boiler to Propane - EVG 155 25
Gas Conversions - 220-399 28
Gas Piping - Sizing Gas Lines 33
Gas Piping 34
Venting & Air Piping - General 35
Commonwealth of Massachusetts Installations 39
Vent Termination Requirements 40
Boiler Room Air Openings 41
Vent and Air Piping and Boiler Connections. 42
DIRECT VENT - Sidewall with Separate Pipes 44
DIRECT VENT - Sidewall Concentric. 46
DIRECT VENT - Sidewall with W-M Vent/Air Plate. . . . 48
DIRECT VENT - Vertical with Separate Pipes 50
DIRECT VENT - Vertical Concentric. 52
DIRECT VENT - Vertical Vent/Sidewall Air. 54
Concentric Termination, Typical (sidewall or vertical). . 56
DIRECT Exhaust - Kit Option 57
Installation instructions 57
Install Water Piping. 58
Direct Connect System Piping - Single Boiler System . 63
Primary/Secondary System Piping - Single Boiler System 65
Install Condensate Line (Evg 110/155). 69
Install Condensate Line (EVG 220/299/300/399). 70

Section 3 - Electrical

Field Wiring. 73
Wiring Diagram - Schematic. 84
Wiring Diagram - Ladder. 86
Zoning with the Evergreen® Pro Control. 88

⚠ WARNING

DO NOT SERVICE THE BOILER WITHOUT A Evergreen® PRO MAINTENANCE KIT AVAILABLE

The maintenance kit includes components that may have to be replaced when accessing or disassembling parts of the boiler. Failure to replace damaged components and to use only the parts specifically intended for the boiler can result in severe personal injury, death or substantial property damage. See **Figure 124, page 166** for part number.

Section 4 - Operation

Control Setup and Operation 91
Control Settings Menus 97
EXPRESS SETUP - Example A 98
EXPRESS SETUP - Example B 100
EXPRESS SETUP - Example C. 102
NAVIGATION Menus 104
CONTRACTOR Menu 106
BOILER SETTINGS Menus 107
PUMP SETTINGS Menus. 108
SYSTEM SETTINGS Menus 109
BOILER PRIORITY Menus. 110
AUX Pump/Output 114
DIAGNOSTICS Menu. 115
SERVICE Menus 117
Startup - Fill The System 118
Startup - Final Checks 120
Check-Out/Startup Verification 127
Annual Startup and General Maintenance 128
Annual Startup 129

Section 5 - Maintenance

Maintenance. 141
Cleaning Heat Exchanger Flue Side, 110. 142
Cleaning Heat Exchanger Flue Side, 155 145
Cleaning Heat Exchanger Flue Side (220-399) 148

Section 6 - Troubleshooting

Troubleshooting 153

Section 7 - Parts

Accessory Parts 166
Replacement Parts. 168

Section 8 - Service Information

Dimensions. 190
Ratings - Evergreen® Pro Boilers 192
Ratings - Multiple Evergreen® Pro Boilers. 194
Installation and Service Certificate 196
Read Configuration Settings. 197
Maintenance Log 199

Abbreviations

Table 1 Common abbreviations

Abbreviation	Description
AHD	Additional Heat Demand
AMP	Ampere or Amperage
ANSI	American National Standards Institute
BMS	Building Management System
BTUH	British Thermal Unit per Hour
CAD	Combustion Air Damper
CH	Comfort Heat
CP	Consumer Protection
CSA	Canadian Standards Association
DHW	Domestic Hot Water
LWCO	Low Water Cut-Off
MBH	Thousands of Btuh
NFPA	National Fire and Protection Agency
ODT	Outdoor Temperature
P/T	Pressure and Temperature
VAC	Volts Alternating Current
VDC	Volts Direct Current
WWSD	Warm Weather Shut Down

Tools

Table 2 Tools

Tools Needed	Used For	Purpose
Flat blade screwdriver	Wiring on terminal blocks, adjust gas valve setting (110/155)	I, M
Phillips Screwdriver	Door removal and other serviceable items	I, M
5/16" Socket	Burner Access Panel removal (220-399)	M
2.5 & 4mm Allen wrench	To adjust gas valve settings (220 - 399)	I, M
3mm Allen wrench	For removing ignition electrode screws	M
8mm wrench	To remove blower	M
10mm wrench	To remove heat exchanger cover plate	M
T20 long-handled Torx driver	To remove burner screw (110) and mixer/venturi	M
Large crescent wrench	To remove gas valve	M
Multimeter	Measurements on sensors and electrical components	M
Manometer (Inclined or digital)	Measure the INLET gas pressure to the boiler	I, M
Combustion analyzer (Digital preferred)	Combustion testing and boiler adjustments	I, M
Contact thermometer	Checking surface temperatures of heat exchanger and pipes	I, M
Pipe wrenches	Water and gas piping installation and maintenance	I, M
Maintenance kit	ALWAYS have this kit on hand when performing maintenance in case replacement is required.	M

Purpose:

I = Install, **M =** Maintenance

This page intentionally left blank.

Section 1
Safety

Hazard Definitions

The following defined terms are used throughout this manual to bring attention to the presence of hazards of various risk levels or to important information concerning the life of the product.

DANGER

Indicates presence of hazards that will result in severe personal injury, death or substantial property damage.

WARNING

Indicates presence of hazards that can result in severe personal injury, death or substantial property damage.

CAUTION

Indicates presence of hazards that will or can result in minor personal injury or property damage.

NOTICE

Indicates special instructions on installation, operation or maintenance that are important but not related to personal injury or property damage.

1

Please Read Before Proceeding

WARNING

Installer:

- Read all instructions, including this manual and all other information shipped with the boiler, before installing. Perform steps in the order given.

User:

- This manual is for use only by a qualified heating installer/service technician. Refer to User's Information Manual for your reference.
- Have this boiler serviced/inspected by a qualified service technician, at least annually.

Failure to comply with the above could result in severe personal injury, death or substantial property damage.

NOTICE

Write in the Consumer Protection (CP) number in the space provided on the Installation certificate on **page 196** if not already shown.

When calling or writing about the boiler, please have the boiler model number from the boiler rating label and the CP number from the boiler jacket.

Consider piping and installation when determining boiler location.

Any claims for damage or shortage in shipment must be filed immediately against the transportation company by the consignee.

DANGER

If any part of a boiler, burner or its controls has been sprayed with or submerged under water, either partially or fully, DO NOT attempt to operate the boiler until the boiler has been either replaced or completely repaired, inspected, and you are sure that the boiler and all components are in good condition and fully reliable.

Otherwise, by operating this boiler, you will cause a fire or explosion hazard, and an electrical shock hazard, leading to serious injury, death, or substantial property damage. See the instructions at right.

Saltwater Damage – The exposure of boiler components to saltwater can have both immediate and long-term effects. While the immediate effects of saltwater damage are similar to those of freshwater (shorting out of electrical components, washing out of critical lubricants, etc.), the salt and other contaminants left behind can lead to longer term issues after the water is gone due to the conductive and corrosive nature of the salt residue. Therefore, Weil-McLain equipment contaminated with saltwater or polluted water will no longer be covered under warranty and should be replaced.

Electrical Damage – If any electrical component or wiring came into contact with water, or was suspected to have come into contact with water, replace the boiler with a new Weil-McLain boiler.

WARNING

Failure to adhere to the guidelines below can result in severe personal injury, death or substantial property damage

Expansion Tank

- Relieve pressure from the system before isolating the expansion tank.

When Servicing Boiler –

- To avoid electric shock, disconnect all electrical supplies to the boiler before performing maintenance.
- To avoid severe burns, allow boiler to cool before performing maintenance.
- This boiler contains ceramic fiber and fiberglass materials. Refer to the WARNING and instructions on **page 118**.

Carbon Monoxide Detector –

- The installer must verify that at least one carbon monoxide alarm has been installed and is operational within a residential living space or home following the alarm manufacturer's instructions and applicable local codes before putting the appliance into operation.

Boiler Operation –

- Do not block flow of combustion or ventilation air to boiler.
- Should overheating occur or gas supply fail to shut off, do not turn off or disconnect electrical supply to circulator. Instead, shut off the gas supply at a location external to the appliance.

Combustion Air –

- DO NOT install combustion air intake where there is a risk of combustion air contamination.

Surge Protector –

- Provide surge protection in the boiler power supply. This will reduce the possibility of damage to the boiler control.

Boiler Water –

- The heat exchanger is made of stainless steel, and requires that system water chemistry be within the limits in this manual. **ADDITIONAL CHEMICAL TREATMENT MAY BE NECESSARY**. See **page 118** for details.
- Thoroughly flush the system (**BEFORE** connecting boiler) to remove sediment. The high-efficiency heat exchanger can be damaged by build-up or corrosion due to sediment. Install a strainer or other sediment removal equipment if necessary.
- Do not use petroleum-based cleaning or sealing compounds in boiler system. Gaskets and seals in the system may be damaged. This can result in substantial property damage.
- Continual fresh make-up water will reduce boiler life. Mineral buildup in heat exchanger reduces heat transfer, overheats the stainless steel heat exchanger, and causes failure. Addition of oxygen carried in by make-up water can cause internal corrosion. Leaks in boiler or piping must be repaired at once to prevent make-up water. Use this boiler ONLY in a closed-loop system.
- Do not add cold water to a hot boiler. Thermal shock can cause the heat exchanger to crack.

Freeze Protection Fluids –

- NEVER use automotive or standard glycol antifreeze. Use only freeze-protection fluids made for hydronic systems. Follow all guidelines given by the antifreeze manufacturer. Thoroughly clean and flush any replacement boiler system that has used glycol before installing the new boiler. Use only the products listed by WM Technologies for use with this boiler. See **page 109** for details.

CAUTION

Frozen Water Damage Hazard

Residences or buildings that are unattended in severely cold weather, boiler system components failures, power outages, or other electrical system failures could result in frozen plumbing and water damage in a matter of hours. For your protection, take preventative actions such as having a security system installed that operates during power outages, senses low temperature, and initiates an effective action. Consult with your boiler contractor or a home security agency.

Commonwealth of Massachusetts

When the boiler is installed within the Commonwealth of Massachusetts:

- This product must be installed by a licensed plumber or gas fitter.
- If antifreeze is used, a reduced pressure back-flow preventer device shall be used.
- Sidewall vent air installations – see instruction on **page 50**.

Section 2
Installation

This page intentionally left blank.

The Evergreen® Pro Gas-fired Water Boilers

1. **Stainless Steel Firetube Heat Exchanger**
2. **Heat Exchanger Access Cover/Burner Mounting Plate**
3. **Blower**
   The advanced blower design and air inlet silencer on Evergreen® Pro boilers result in very quiet operation.
   Air enters the boiler enclosure through the air intake adapter (item 19), flows through the enclosure, enters the air inlet silencer (item 5), then enters the venturi (item 6) where it mixes with gas before entering the blower. The blower pulls air through these components and then pushes it through the cover plate to the burner (item 12).
4. **Gas Valve**
   The automatic gas valve references the pressure in the cabinet and allows gas to flow when the control (item 16) applies power. A manual gas shut off valve is shipped loose with the boiler. It allows shutting off the gas supply for servicing or shut down. See instructions in this manual for manual gas valve installation.
5. **Air Inlet Silencer**
   The horn-shaped air inlet silencer significantly reduces fan noise, providing exceptionally quiet operation.
6. **Venturi**
   When air flows through the venturi, a negative pressure is created. This causes gas to flow from the gas valve into the venturi, where it is mixed with the air. The gas/air mixture then continues into the blower.
7. **Boiler Out Temperature Sensor:**
   This dual sensor monitors boiler outlet water temperature The control adjusts boiler firing rate so the outlet water temperature is correct, based on the calculated (if outdoor reset used – see **page 179**) or fixed target temperature.
8. **Boiler In Temperature Sensor**
   This sensor monitors return water temperature to the boiler. The control reduces or increases boiler input, depending on how close the return water temperature is to the outlet water temperature.
9. **Electronic Display**
   The electronic color touch screen display is used to configure boiler settings and monitor boiler operation. This display allows changing display mode, selecting and adjusting control settings, and resetting the control after lockout.
10. **Flue Adapter (fits 3" PVC, 3" (Duravent), and 3" (110 / 155) fits 4" PVC, 4" PP (Duravent), and 4" SS (Duravent)**
11. **Flue Pipe**
12. **Burner (not shown)**
    Made with high-grade stainless steel construction, the burner uses pre-mixed air and gas. The burner and control provide modulating firing.
13. **Boiler Outlet Pipe**
14. **Boiler Inlet Pipe**
15. **Gas Line**
    This stainless steel flexible gas line connects the incoming gas line to the gas valve. The gas line has a ½" NPT (110/155), 3/4" NPT (220 - 399) connection for installation.
16. **Control Module (see important information page 87)**
17. **Communication Board**
    The communication board provides boiler-to-boiler communication and Building Management System (BMS) interface.
18. **High Voltage Terminal Strip**
19. **Air Intake Adapter (fits 3" PVC (110/155); 4" PVC (220 -399))**

20a. **Electrical Entrances (line voltage)**
    The top left side knockouts are designated for line voltage wiring only. Ensure all wiring entrances are sealed.

20b. **Electrical Entrances (low voltage)**
    The bottom right side knockouts are designated for low voltage wiring only. Ensure all wiring entrances are sealed.

21. **Boiler Drain Valve (not shown)**
    Shipped loose for field piping. Pipe drain valve on reducing tee at the lowest point of return piping to boiler. See instructions, **page 21** in this manual.
22. **Condensate Trap Nozzle**
    The outlet at the bottom of the condensate collection dish. This is where condensate is discharged from the boiler. The condensate trap assembly attaches here.
23. **Flue Gas Condensate Drain Trap Assembly and Bracket (110/155 only) (not shown)**
    The condensate trap assembly and bracket are field-installed, condensate drain trap is connected to the condensate trap nozzle as shown in this manual.
24. **Jacket Door**
    The jacket door is sealed to the boiler assembly around its entire perimeter.
25. **Front Door Latches**
    Two (2) latches secure the door in place.
26. **Door Retention Screw (110/155 only)**
27. **Ignition Electrode/Flame Sensor**
    The burner flame is ignited by applying a high voltage to the ignition electrode. This causes a spark (from electrode to ground). After ignition, the electrode measures flame signal. (110/155 only).
28. **Flame Inspection Window**
    The quartz glass window provides a view of the burner surface, the flame, and the ignition electrode (110/155 only).
29. **Flue Gas Dual Sensor**
    This dual sensor monitors the flue gas exit temperature. The **Evergreen® Pro** control will shut down the boiler if flue gas temperature gets too hot. This protects the flue pipe and the heat exchanger from overheating.
30. **Transformer**
    The 120V/24V transformer provides 24V to low voltage control circuitry.
    Do **NOT** splice wiring into transformer.
31. **Air Baffle**
    The air baffle protects internal boiler components by diverting any incoming moisture or debris away from critical components. It must be temporarily removed while servicing the heat exchanger.
32. **Floor Stand Assembly (110/155 only)**
    The provided stand allows for the **Evergreen® Pro** boiler to be either wall hung or floor standing.
33. **On/Off Switch (220-399 only)**
34. **Flame Sensor (220-399 only)**
    After ignition, this measures the flame signal to provide a safe combustion at all times.
36. **Leveling Legs**
37. **Receptacle (220 - 399 only)**
38. **Air Pressure Switch (220-399 only)**
    The Air Pressure Switch is a Normally Closed switch which monitors flue pressure and at the maximum pressure of 3.25" W.C. will open, causing a contol fault indicating a blockage of sort.

The EVG 110 Gas-fired Water Boilers

EVG 110 Interior

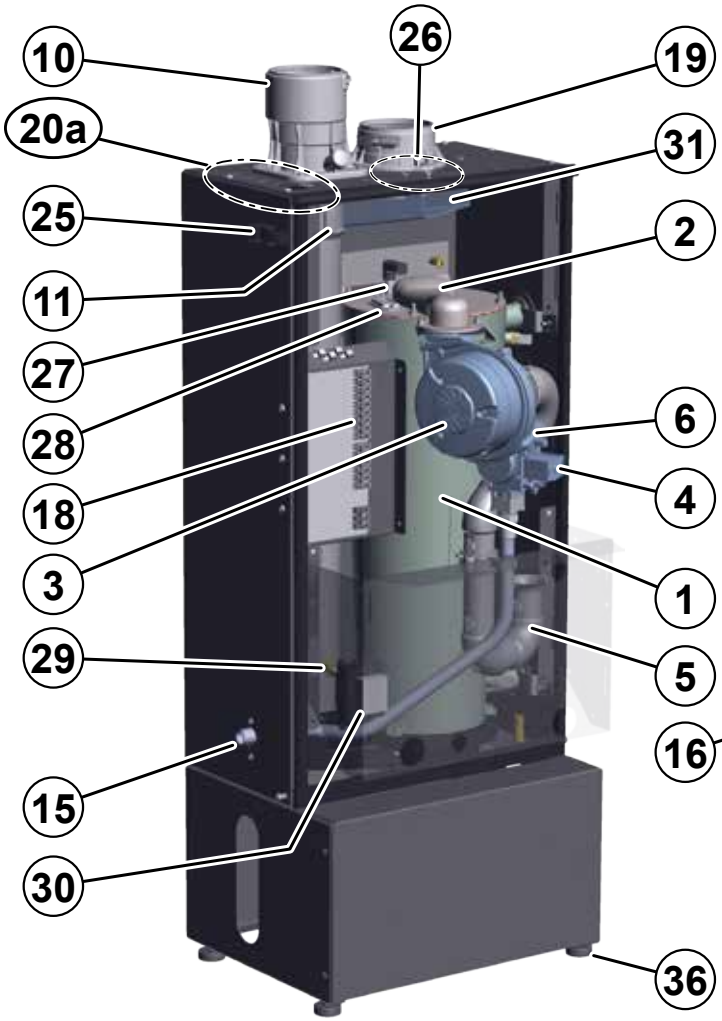

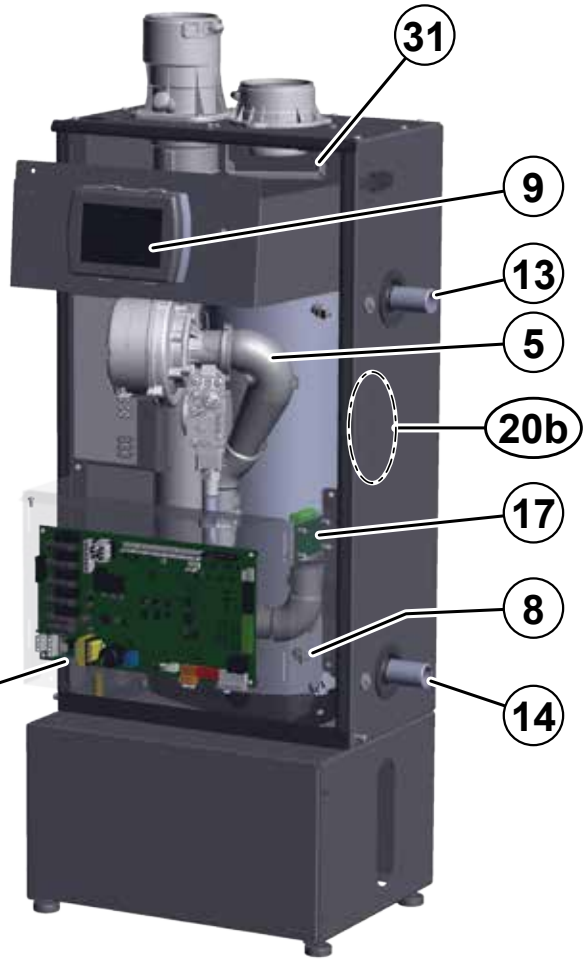

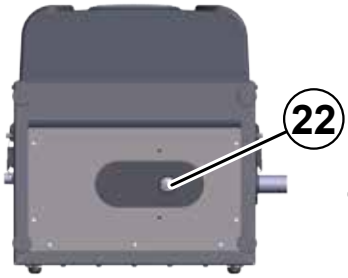

EVG 110 Bottom

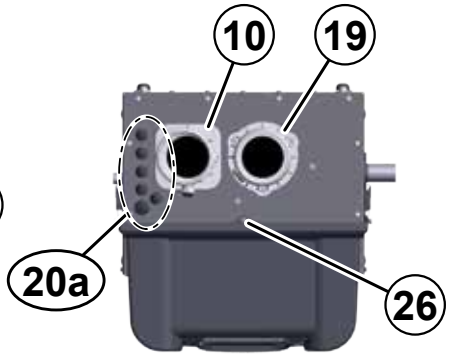

EVG 110 Top

EVG 110 Front

The EVG 155 Gas-fired Water Boilers

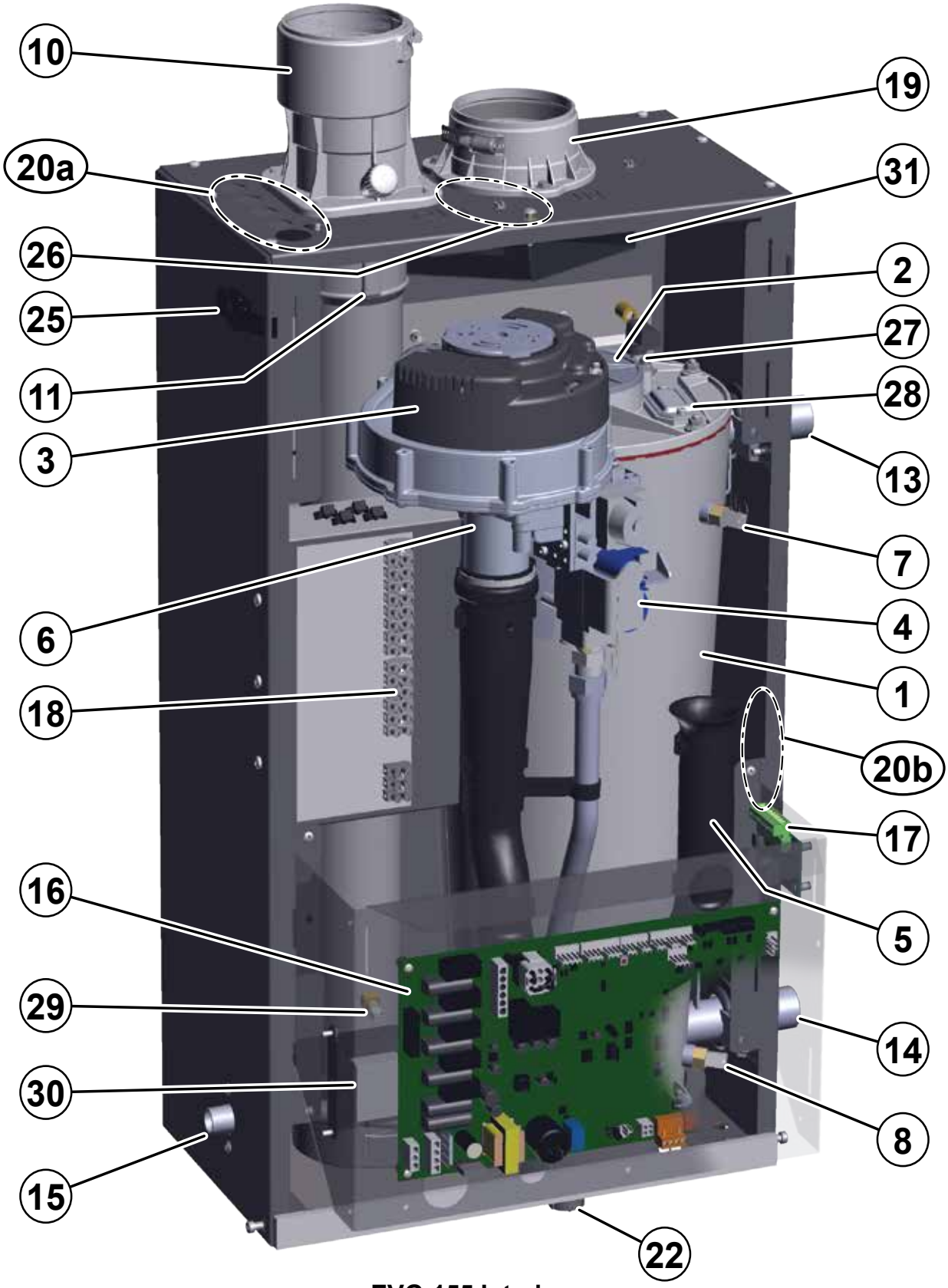

EVG-155 Interior
(some components omitted for clarity)

The EVG 220-399 Gas-fired Water Boilers

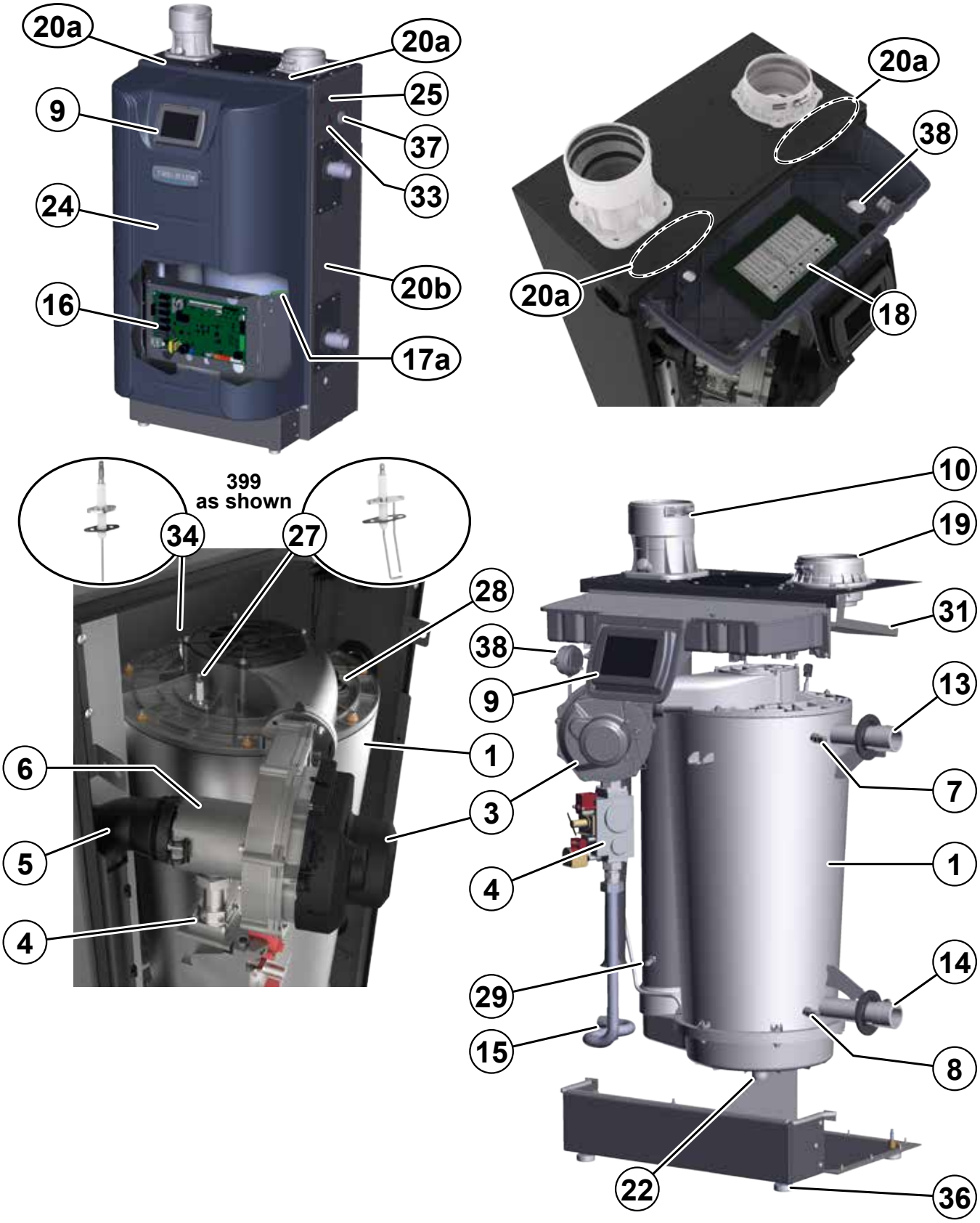

Boiler Location

Installations Must Comply with:

- Local, state, provincial, and national codes, laws, regulations and ordinances.
- National Fuel Gas Code, ANSI Z223.1/NFPA 54 – latest edition.
- National Electrical Code ANSI/NFPA 70 – latest edition. Electrical installation and grounding must be in accordance with CSA C22.1, Part 1, Canadian Electrical Code, and/or local codes.
- For Canada only: CAN/CSA B149.1, Natural Gas and Propane Installation Code, and any local codes.
- Where required by the authority having jurisdiction, the installation must conform to the Standard for Controls and Safety Devices for Automatically Fired Boilers, ANSI/ASME CSD-1.

NOTICE

The Evergreen® Pro boiler gas manifold and controls met safe lighting and other performance criteria when boiler underwent tests specified in ANSI Z21.13 – latest edition.

Before Locating the Boiler, Check:

1. The Evergreen® Pro boiler can be floor-standing or wall mounted.
2. Wall construction - If the boiler is wall-mounted, make sure the wall construction is suitable to carry the weight of the boiler and components. See **page 16** for instructions.
3. The boiler is suitable for INDOOR installation only.
4. Check for nearby connection to:
   - System water piping
   - Gas supply piping
   - Condensate drain
   - Venting connections
   - Electrical power
5. Check area around boiler. Remove any combustible materials, gasoline and other flammable liquids.

WARNING

Failure to keep boiler area clear and free of combustible materials, gasoline and other flammable liquids and vapors can result in severe personal injury, death or substantial property damage.

6. The Evergreen® Pro boiler must be installed so that gas control system components are protected from dripping or spraying water or rain during operation or service.
7. If new boiler will replace existing boiler, check for and correct system problems, such as:
   - Sediment or corrosion in system piping - clean and flush piping BEFORE connecting the new boiler. See **page 118**.
   - System leaks causing oxygen corrosion or heat exchanger cracks from hard water deposits.
   - Incorrectly-sized expansion tank.
   - Lack of freeze protection in boiler water causing system and boiler to freeze and leak.

Residential Garage Installation

Precautions

1. Take the following special precautions when installing the boiler in a residential garage. If the boiler is located in a residential garage:
   - Mount the boiler with its burner and igniter are at least 18 inches above the floor. Follow the National Fuel Gas Code, ANSI Z223.1 for U. S. installations, or Natural Gas and Propane Installation Code, CSA B149.1 and B149.2 for Canadian installations.
   - Locate or protect the boiler so it cannot be damaged by a moving vehicle.
   - Ensure that the installation complies with all applicable codes.
   - Prevent boiler water and condensate from freezing.

Provide Air Openings to Room

Evergreen® Pro Boiler Alone in Boiler Room

1. No air ventilation openings into boiler room are needed if direct vented and clearances around boiler are at least equal to the SERVICE clearances shown in **Figure 1, page 13**.
2. For spaces that DO NOT supply the minimum service clearances, provide two openings as shown in **Figure 1, page 13**. Each opening must provide 1 square inch free area per 1,000 Btuh of boiler input.

WARNING

- The space must be provided with combustion/ventilation air openings correctly sized for all appliances located in the same space as the Evergreen® Pro boiler.
- Reinstall boiler jacket door after servicing. The boiler jacket door must be securely fastened to the boiler to prevent boiler from drawing air from inside the boiler room. This is particularly important if the boiler is located in the same room as other appliances.
- Failure to comply with the above warnings could result in severe personal injury, death or substantial property damage.

Evergreen® Pro Boiler in Same Space with Other Gas or Oil-Fired Appliances

1. Follow the sizing requirements shown in **Figure 42, page 41**.

Vent and Air Piping

1. The **EVG** boiler requires a special vent system, designed for pressurized venting. The boilers are rated ANSI Z21.13 Category IV (pressurized vent, likely to condense in the vent). See instructions beginning on **page 35**.
2. You must also install air piping from outside to the boiler air intake adapter. The resultant installation is categorized as direct vent (sealed combustion). Note prevention of combustion air contamination on **page 35** when considering vent/air termination.
3. Direct exhaust venting can be done with the approved Weil-McLain Direct Exhaust Kit, please see **page 57** for additional installation information and **page 166** for kit information.
4. Vent and air must terminate near one another unless otherwise specified in this manual. Vent and air piping may be routed vertically through the roof or out a side wall, following the options given in this manual. You may use any of the vent/air piping methods covered in this manual. Do not attempt to install the **EVG** boiler using any other means.
5. Be sure to locate the boiler such that the vent and air piping can be routed through the building and properly terminated. The vent/air piping lengths, routing and termination method must all comply with the methods and limits in instructions beginning on **page 35**.

Boiler Location (continued)

Clearances - Evergreen® Pro 110/155

Provide clearances for service access - RECOMMENDED

1. See **Figure 1** for recommended service clearances.
2. If you do not provide minimum service clearances shown, it might not be possible to service the boiler without removing it from the space.
3. Clearance D, **Figure 1** allows for the installation of piping as shown in **Figure 12, page 21** plus a close nipple and elbow.

WARNING

Closet or small-enclosure installations which do not provide at least these recommended clearances require the specially-sized and placed air openings shown in **Figure 2**.

Figure 1 **RECOMMENDED** service clearances (**all dimensions are in inches**)

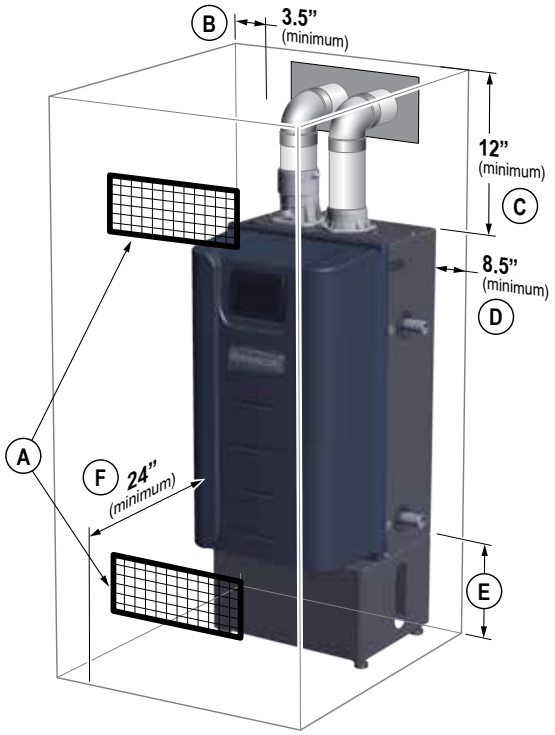

A. Provide combustion air/ventilation openings per **Figure 42, page 41** or as otherwise directed in this manual or by applicable codes. NOTE: If the installation does not provide the minimum clearances in this illustration, then the enclosure must have air openings located and sized per **Figure 2**.

B. Left side service clearance = 3.5 inches minimum.

C. Service clearance above top of boiler = 12 inches minimum.

D. Right side service clearance = 8.5 inches minimum.

E. Service clearance below the boiler = 12 inches minimum for wall hung installation, 0 inches minimum for floor standing installation.

F. Service clearance in front of the boiler = 24 inches minimum.

NOTICE

ADDITIONAL service clearance may be needed, depending on how piping is routed to the boiler.

Provide clearances from combustible materials - REQUIRED

1. See **Figure 2** for REQUIRED minimum clearances. ALL installation must provide at least these minimums.
2. Hot water pipes - at least ½ inch from combustible materials.
3. Vent pipe - at least 3/16 inches from combustible materials.
4. Clearance D, **Figure 2** allows for the installation of a reducer bushing (155 only) and elbow. Other piping may require additional clearance.
5. See **Figure 1** for service clearance minimums.

WARNING

Closet or small-enclosure installations which do not provide at least the recommended service clearances shown in **Figure 1** require the specially-sized and placed air openings shown in **Figure 2**.

Figure 2 **REQUIRED** minimum clearances (**all dimensions are in inches**)

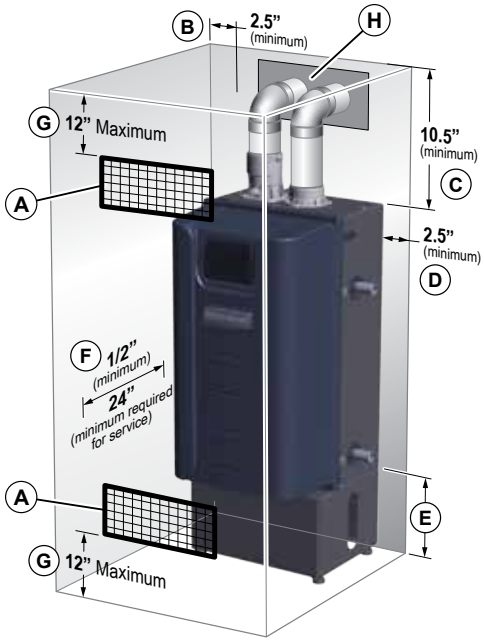

A. Provide combustion air/ventilation openings per **Figure 42, page 41** or as otherwise directed in this manual or by applicable codes. NOTICE If the installation does not provide the minimum clearances in **Figure 1**, then the enclosure MUST HAVE air openings located per **Figure 2**, above. Each of these air openings must have free area of at least 1 square inch per 1,000 MBH of boiler input.

B. Left side clearance to combustibles =2.5 inches minimum.

C. Top of boiler clearance to combustibles = 13 inches minimum.

D. Right side clearance to combustibles = 2.5 inches minimum.

E. Bottom of boiler clearance to combustibles = 7 inches minimum (must be 18 inches above floor for garage installations) for wall hung installation, 0 inches minimum for floor standing installation.

F. Clearance in front of the boiler = 0.5 inches, but **24 inches minimum required for service.**

G. Air openings must be located in the FRONT of the enclosure, as shown. They must be no more than 12 inches from the floor or ceiling, as shown.

H. Vent pipe must be minimum 3/16 inch from combustibles. Opening in combustible wall, floor, ceiling or roof must be 3/8 inches larger than flue pipe diameter, fitted with corrosion resistant steel thimble, or larger if required by codes or as specified by vent pipe manufacturer.

Boiler Location (continued)

Clearances - Evergreen® Pro 220/299/300/399

Provide clearances for service access - RECOMMENDED

1. See **Figure 3** for recommended service clearances.
2. If you do not provide minimum service clearances shown, it might not be possible to service the boiler without removing it from the space.

WARNING

Closet or small-enclosure installations which do not provide at least these recommended clearances require the specially-sized and placed air openings shown in **Figure 4**.

Figure 3 **RECOMMENDED** service clearances (**all dimensions are in inches**)

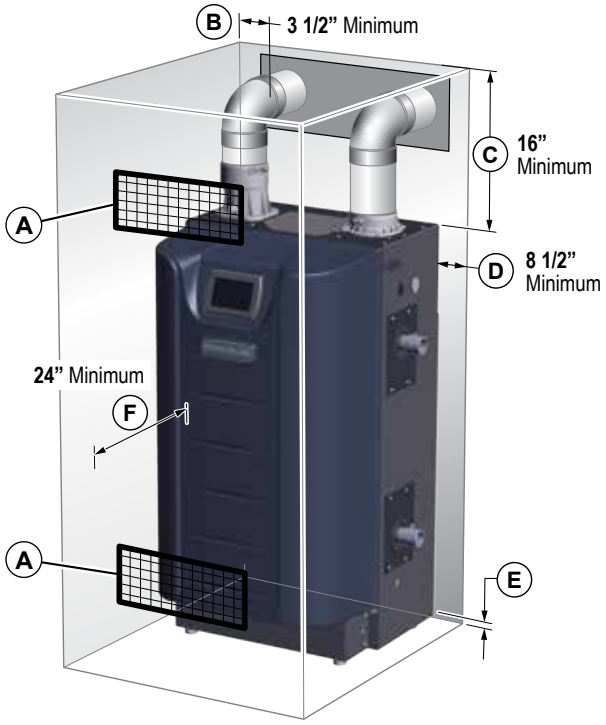

A. Provide combustion air/ventilation openings per **Figure 42, page 41** or as otherwise directed in this manual or by applicable codes. NOTE: If the installation does not provide the minimum clearances in this illustration, then the enclosure must have air openings located and sized per **Figure 4**.
B. Left side service clearance = 3.50 inches minimum.
C. Service clearance above top of boiler = 16 inches minimum.
D. Right side service clearance = 8.50 inches minimum.
E. Service clearance below the boiler = 0 inches minimum.
F. Service clearance in front of the boiler = 24 inches minimum.

NOTICE

ADDITIONAL service clearance may be needed, depending on how piping is routed to the boiler.

Provide clearances from combustible materials - REQUIRED

1. See **Figure 4** for REQUIRED minimum clearances. ALL installation must provide at least these minimums.
2. Hot water pipes - at least 1/2" from combustible materials.
3. Vent pipe - at least 3/16" from combustible materials.
4. See **Figure 3** for service clearance minimums.

WARNING

Closet or small-enclosure installations which do not provide at least the recommended service clearances shown in **Figure 3** require the specially-sized and placed air openings shown in **Figure 4**.

Figure 4 **REQUIRED** minimum clearances (**all dimensions are in inches**)

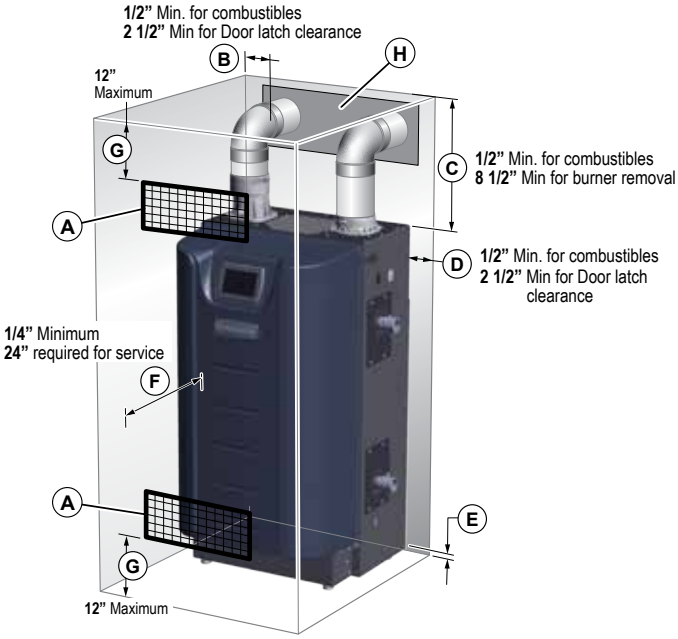

A. Provide combustion air/ventilation openings per **Figure 42, page 41** or as otherwise directed in this manual or by applicable codes. NOTICE If the installation does not provide the minimum clearances in **Figure 3**, then the enclosure MUST HAVE air openings located per **Figure 4**, above. Each of these air openings must have free area of at least 1 square inch per 1,000 MBH of boiler input.
B. Left side clearance to combustibles = 0.50 inches minimum, but 2.5" for door latch removal.
C. Top of boiler clearance to combustibles = 0.50 inches minimum, but 8.5" for burner removal.
D. Right side clearance to combustibles = 0.50 inches minimum, but 2.5" for door latch removal.
E. Bottom of boiler clearance to combustibles = 0 inches minimum (must be 18 inches above floor for garage installations).
F. Clearance in front of the boiler = 0.25 inches, but 24 inches minimum required for service.
G. Air openings must be located in the FRONT of the enclosure, as shown. They must be no more than 12 inches from the floor or ceiling, as shown.
H. Vent pipe must be minimum 3/16 inch from combustibles. Opening in combustible wall, floor, ceiling or roof must be 3/8" larger than flue pipe diameter, fitted with galvanized steel thimble, or larger if required by codes or as specified by vent pipe manufacturer.

Prepare Boiler Location

Flooring and Foundation

Flooring

1. The boiler is approved for installation on combustible flooring, but must never be installed on carpeting.

WARNING

Do not install boiler on carpeting even if foundation is used. Fire can result, causing severe personal injury, death or substantial property damage.

Foundation

1. Provide a solid foundation pad, at least 2 inches above the floor, if any of the following is true:
   - floor can become flooded.
   - the floor is dirt, sand, gravel or other loose material.
   - the boiler mounting area is severely uneven or sloped.
2. The minimum foundation size is:
   - Evergreen® Pro 110/155: 18 inches wide x 18 inches deep.
   - Evergreen® Pro 220/299/300/399: 24 inches wide x 24 inches deep.
3. Foundation may be of wood, brick or concrete (minimum 2 inches thick) construction.

If flooding is possible, elevate boiler sufficiently to prevent water from reaching boiler.

Remove Boiler from Crate

WARNING

- **The boiler is heavy**. Use caution not to drop the boiler or cause bodily injury while lifting and handling. Verify that the boiler is securely attached to prevent possibility of boiler falling after installation.
- After the boiler is removed from the shipping carton, **DO NOT** allow the boiler to sit on its bottom. This would cause pressure on protruding plastic, resulting in interior damage. Either lay the boiler on its back or leave on the styrofoam protective shipping base.

  Do not drop boiler or bump jacket on floor or pallet. Damage to boiler can result.

NOTICE

Cold weather handling - If boiler has been stored in a very cold location (below 0°F) before installation, handle with care until the plastic components come to room temperature.

The Evergreen® Pro boiler is generally easier to handle and maneuver after removing the shipping container.

Evergreen® Pro 110/155

1. Remove items 1, 2, 3 and 6 in **Figure 5**. Remove trim kit and parts from item 2.
2. **Leave the boiler resting on the styrofoam protective base** (item 6) and bottom cardboard cap (item 7), until ready to place on the wall. If removing the boiler from the shipping base, rest the boiler on its back, NOT on its bottom.

Figure 5 Evergreen® Pro 110/155 Boiler shipping container

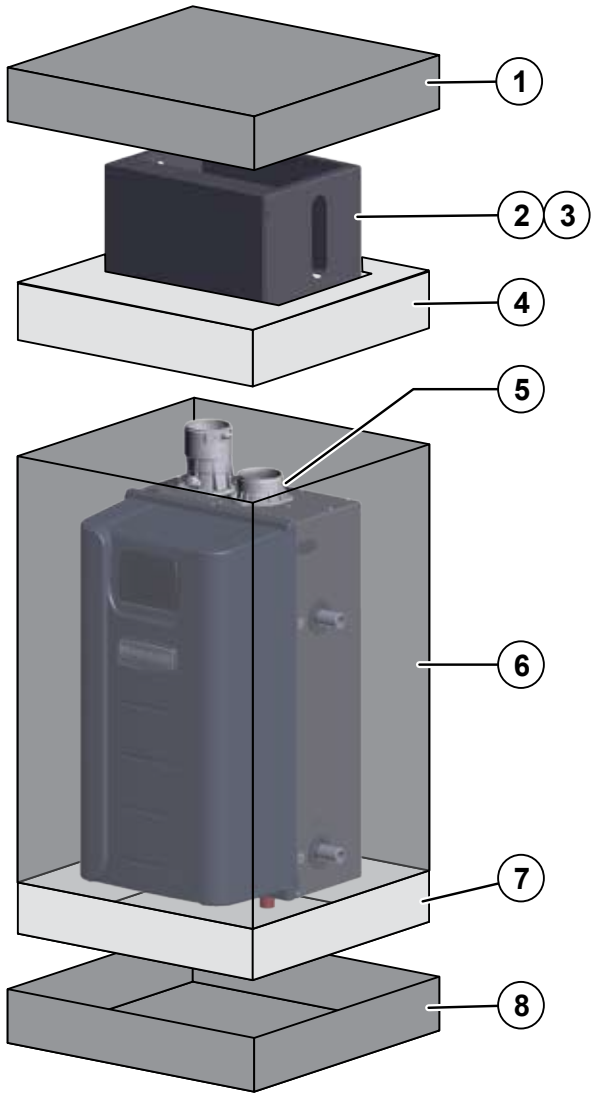

1. Cardboard cap, top
2. Floor stand assembly
3. Trim box (nestled inside Floor stand assembly)
4. Styrofoam protective cap
5. Boiler
6. Cardboard sleeve
7. Styrofoam protective base
8. Cardboard cap, bottom

Prepare Boiler Location

(continued)

Evergreen® Pro 220/299/300/399

1. Remove items 1, 2, 4, and 5 in **Figure 6**. Remove trim kit and parts from item 6.
2. After removing outer shipping carton from boiler, REMOVE jacket front door by opening door latches. Removing the door will prevent possible damage to the door during handling.
3. Remove the additional trim kits from inside the boiler.
4. To remove boiler from pallet (after removing jacket front door):
   a. Remove the lag screws securing the shipping brackets.
   b. Unscrew the two (2) rear boiler legs and remove the shipping brackets and discard. The shipping brackets are NOT to be used for wall mounting.
   c. Discard the cardboard protector insert on the rear of the boiler

Figure 6 Evergreen® Pro 220/299/300/399 Boiler shipping container

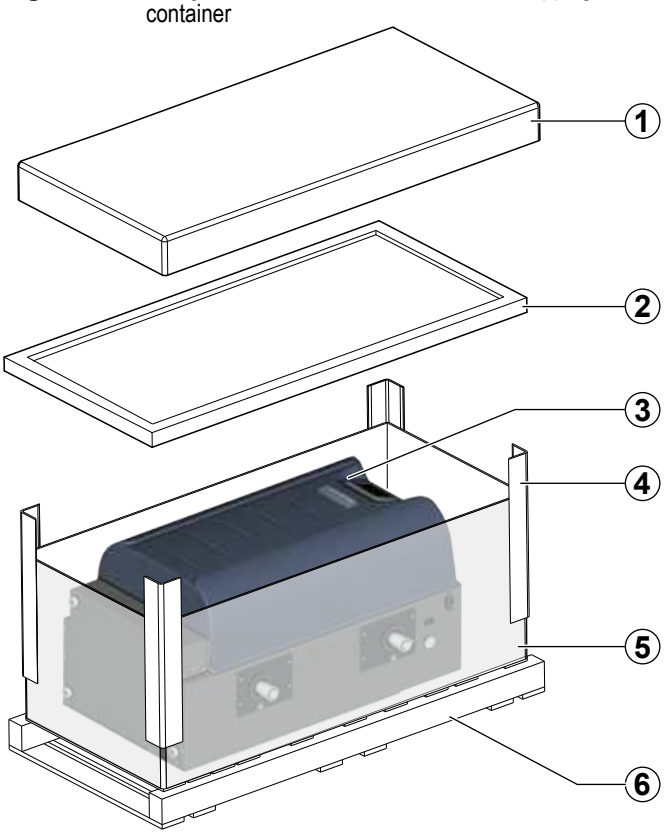

1. Cardboard cap, top
2. Cardboard support
3. Boiler
4. Cardboard corners
5. Cardboard outside sleeve
6. Pallet

Wall-Mounting the Boiler

Wall-Mounting Requirements

WARNING

- DO NOT attempt to attach the wall mount bracket using anchors or any means other than directly securing to the wall studs (or equivalent wood structure if studs are not on 16 inch centers).
- The wall must be vertically plumbed and capable of carrying the weight of the boiler and any attached piping components.

The Operating Weights for Evergreen® Pro Boilers are:

Model	Without Stand (lbs)	With Stand (lbs)
EVG 110	107	120
EVG 155	129	143
EVG 220	190	n/a
EVG 299/300	255	n/a
EVG 399	255	n/a

WARNING

Failure to comply with above and the procedure given below could result in severe personal injury, death or substantial property damage.

1. Stud spacing: Bracket holes are spaced for studs on 16 inch centers. For other stud spacing, provide secure, solid mounting surface on which to attach the boiler wall-mounting bracket. The mounting surface must not extend above the top of the boiler jacket.
2. Wood stud wall: Install bracket with lag screws (3/8" x 3") included in kit, only into the studs.
3. Metal stud wall: Secure bracket and spacer board to studs with 3/16 inch toggle bolts and 3/16 inch flat washers (not included with kit).

WARNING

Verify that the studs are suitable for carrying a wall-mounted load. Some metal studs are not designed for this purpose.

4. If the mounting wall has exposed studs, installer must provide a backer board to mount boiler. Boiler cannot be leveled without a backing surface.
5. Mount the boiler on the wall following these instructions. The boiler mounting studs (EVG 110-155) or boiler rear bracket (EVG 220-399) must engage with the wall-mount bracket. Make sure the bracket is not just resting on the edge of the of the mounting stud or washer (EVG 110-155) or the boiler rear bracket (EVG 220-399). Perform all procedures on previous pages before mounting this boiler.
6. For EVG 220-399 only: Boilers can be wall mounted ONLY if using the optional wall-mount kit available from Weil-McLain. This kit is not supplied with the boiler and must be purchased separately. The kit (see **page 166**) includes:
   a. Wall-mount bracket
   b. Lag screw, 3/8" hex head x 3" (2)

Wall-Mounting the Boiler (continued)

Install the Wall-Mount Bracket (by installer)

1. Locate the studs – must be on 16 inch centers. For other stud spacing, provide secure, solid mounting structure on which to attach the wall-mounting bracket.
2. Optional – If boiler is being mounted on drywall or similar surface, provide spacer boards to be installed as shown in **Figure 7**. The boards must be a minimum of ½" thick. Prepare upper board by tracing the mounting slots on the board, and drilling two ¼ through holes in the center of the outlines.
3. Place the wall-mount bracket on the wall so that the mounting slots are centered over the studs (see **Figure 7, page 17**). If using a backing board, skip this step.
4. Level the bracket using a level and trace the outline of the screw slots with a pencil. If using a backing board, skip this step.
5. Remove the wall-mounting bracket and drill ¼" diameter by 3" deep holes, centered in the bracket slot outlines. For metal stud walls using 3/16" toggle bolts, drill required clearance holes. If using a backing board, use the upper board as a template to drill two (2) ¼" by 3" deep holes into the wall studs.

Figure 7 Wall-mount bracket and studs

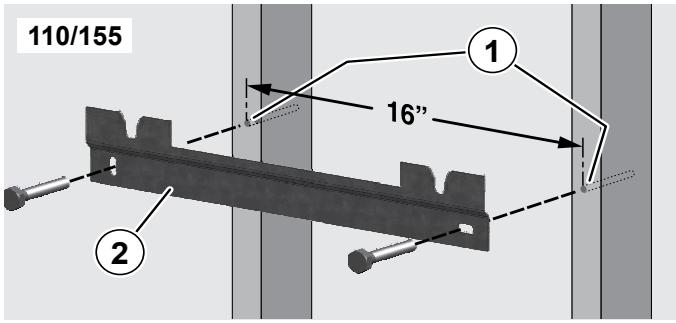

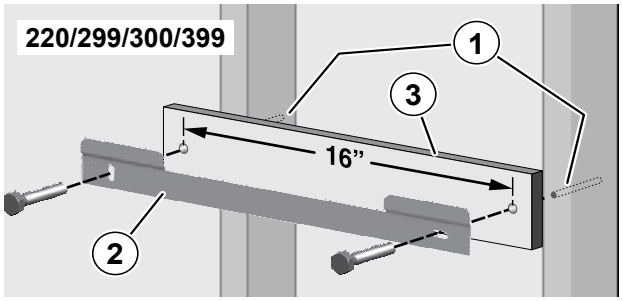

1. Studs - Pre-drill through the wall into the studs ¼ inch diameter x 3 inches deep for 3/8 inch lag screws - Studs must be on 16 inch centers. If studs are any other spacing, provide a secure, solid mounting surface on which to attach the boiler wall-mounting bracket.
2. Wall-mount bracket.
3. Provide a spacer board pre-drilled with two clearance holes, spaced on 16 inch centers. Board must be **minimum** ½ inch thick by 3½" high by 18 inches long. Clearance holes (2) should be ½" diameter for 3/8 inch lag bolts or ¼" diameter for 3/16 inch toggle bolts.

   RECOMMENDED for drywall or plaster lathe.

6. Position the bracket (and upper spacer board, if used) on the wall. Insert and loosely tighten the two (2) lag screws (or toggle bolts for metal studs).
7. Level the wall-mounting bracket and tighten lag screws so bracket is secured. For installations using a backing board, avoid over-tightening the screws to avoid damage to the wall surface.
8. If upper spacer board is used, install the lower spacer board as shown in **Figure 10, page 18**.
9. Once the wall-mount bracket is installed:
   a. For EVG 110-155, Measure 22 1/2 inches below the bottom edge of the wall-mount bracket. Strike a line or place a piece of masking tape with its top edge even with the 22 1/2 inch mark.
   b. For EVG 220-399, measure 35 inches below the bottom edge of the bracket and strike a line or place a piece of masking tape with the top edge even with the 35 inch mark. This line or tape will indicate if the boiler has been properly seated in the hanging bracket.
10. Obtain assistance to lift the boiler into position

⚠ WARNING

The boiler is heavy, and requires two people to lift and place. Wear non-slip rubber gloves to prevent possibility of cuts from sheet metal edges. The jacket door can be left on boiler, but boiler must ONLY be lifted from the bottom and rear of the sheet metal housing, NOT from the pipes or any plastic part.

11. Lift the boiler high enough that its mounting studs (EVG 110-155) or rear bracket (EVG 220-399) will be above the wall-mount bracket.
12. Slide the boiler down so that the back of the cabinet is in contact with the lag screw heads until the bottom of the boiler is below the line or tape place in step 9. If necessary, move boiler left or right until:
    a. EVG 110-115: the V-groove guides the studs fully into the slot
    b. EVG 220-399: the tabs on the wall-mounting bracket insert fully into the back of the cabinet.

⚠ WARNING

When mounting the boiler, use the method described in Step 9 to ensure the cabinet is fully seated on wall mounting bracket. If the bracket is not fully engaged, the boiler could fall. Failure to comply could result in severe personal injury, death, or substantial property damage.

13. Ensure boiler is level front-to-back.

⚠ WARNING

Ensure boiler is NOT pitched upward with the front of the boiler higher than the back of the boiler. This can prevent condensate from draining properly. Failure to comply could result in severe personal injury, death or substantial property damage.

Wall-Mounting the Boiler (continued)

Figure 8 Boiler mounting features

110/155

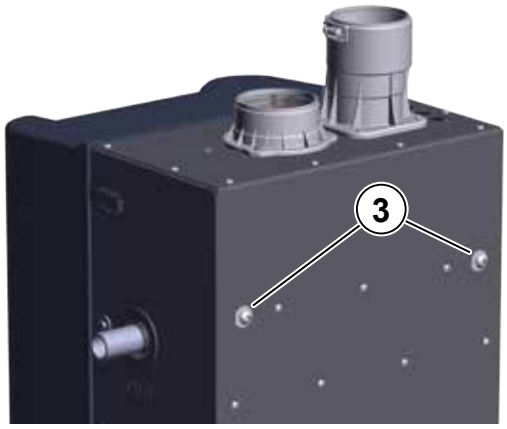

Figure 9 Place boiler on wall-mount bracket

110/155

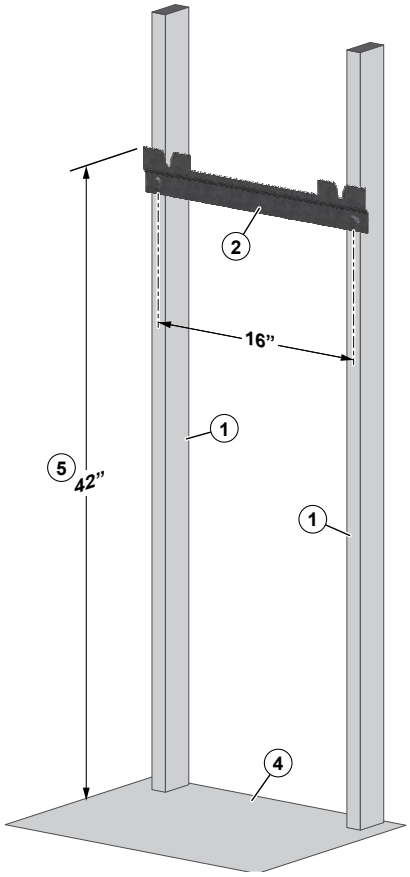

1. Studs - Pre-drill through the wall into the studs ¼ inch diameter x 3 inches deep - Studs must be on 16 inch centers. If studs are any other spacing, provide a secure, solid mounting surface on which to attach the boiler wall-mounting bracket.
2. Wall-mount bracket - secure wall mount bracket to wall as instructed on previous page.
3. Boiler mounting studs (**Figure 8** back of boiler) - The V-groove on the wall-mount bracket will help guide the studs into the slots. The studs are attached to the back of the boiler.
4. Floor surface
5. Minimum RECOMMENDED mounting height - for garage installations.

Figure 10 Place boiler on wall-mount bracket

220/299/300/399

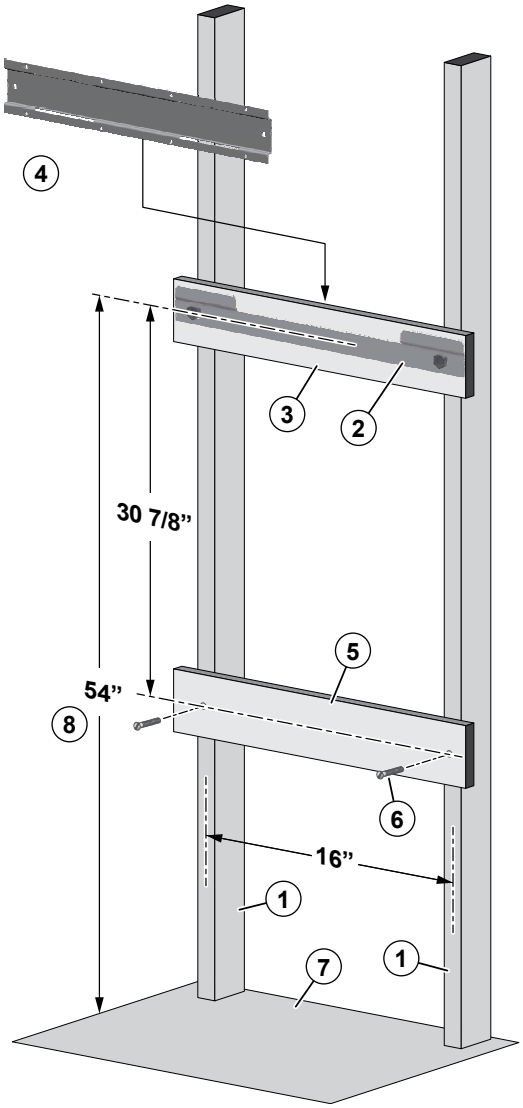

1. Studs - Pre-drill through the wall into the studs ¼ inch diameter x 3 inches deep - Studs must be on 16 inch centers. If studs are any other spacing, provide a secure, solid mounting surface on which to attach the boiler wall-mounting bracket.
2. Wall-mount bracket - secure wall mount bracket and space bar to wall as instructed on previous page.
3. Upper spacer board - (Recommended for drywall or plaster lathe)
4. Boiler mounting bracket - The two slots in the bracket on back of boiler must engage with the two tabs on the wall bracket. This piece is attached to the boiler. (The boiler is not shown to improve clarity.)
5. Lower space board - Provide lower spacer board pre-drilled with two clearance holes, spaced on 16 inch centers. Board must be minimum ½ inch thick by 3½" high by 18 inches long. Use minimum two flat-head wood screws by 2 inches long to secure the space board securely to the studs. Clearance holes should large enough to clear the shaft of the flat-head wood screws used to secure the board to the studs. (RECOMMENDED for drywall or plaster lathe).
6. Flat-head wood screws by 2" long.
7. Floor surface.
8. Minimum RECOMMENDED mounting height - for garage installations.

Floor Stand Assembly- EVG 110-155

Floor Standing

WARNING

The boiler is heavy and requires two people to lift and place upright. Use caution not to drop the boiler or cause bodily injury while lifting and handling. Wear non-slip gloves to prevent possibility of cuts from sheet metal edges.

For EVG 110-155 only: After the boiler is removed from the shipping carton, DO NOT allow the boiler to sit on its bottom, before stand is installed. Doing so may result in damage to the condensate dish.

EVG 110-155

1. Carefully remove boiler from styrofoam protective base and set on back. Remove door from front of boiler by loosening screw on top of boiler and unfastening latches on side of cabinet.
2. Remove four (4) 5/16" studs (A) from floor stand hardware trim bag. Install studs by hand in rivet nuts (B) on bottom of Evergreen® Pro boiler. See **Figure 11**.
3. Remove screws (C) from front access panel (D) from stand assembly using 5/16" driver.
4. Align holes in top of stand (E) with studs on bottom of boiler (F). Slide stand over studs. Remove 5/16" nuts (G) from trim bag. Install nuts on studs using ½" socket or wrench. Make sure to align sides of stand with cabinet before tightening down nuts. Do not overtighten.
5. Install the condensate trap assembly following instructions on **page 50**.
6. After confirming nuts are tightened, obtain assistance and lift the boiler into upright position.
7. Set boiler in place, plumb and level
   a. Adjust legs, if necessary to plumb and/or level boiler.

Note: Floor stand not used for EVG 220-399. For floor installation, set boiler on solid foundation. Use leveling legs to plumb and/or level boiler.

Figure 11 Floor stand assembly (front access panel removed)

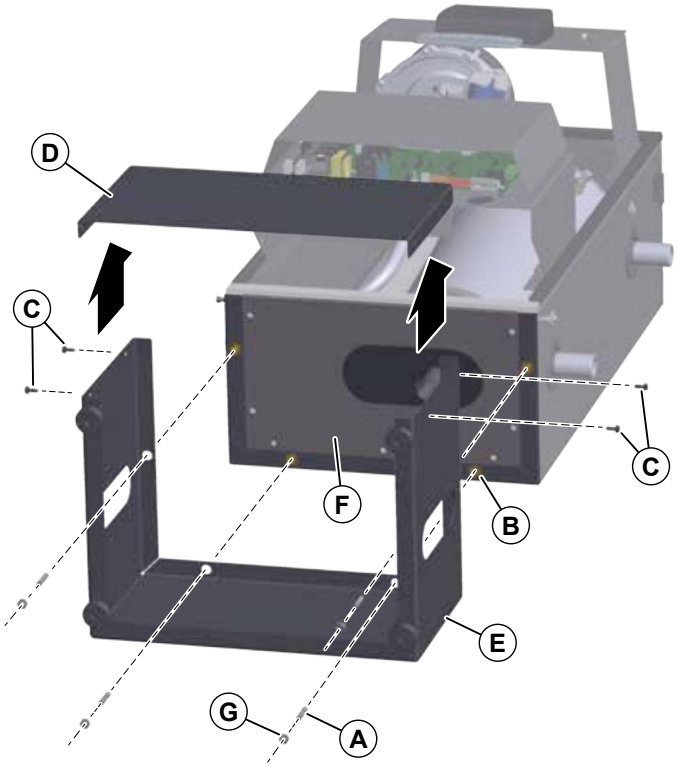

Boiler Hydrostatic Test

WARNING

- **DO NOT install a relief valve with a pressure higher than 30 PSIG for 110/155 and 80 PSIG for 220-399**. This is the maximum allowable relief valve setting for the boiler. Failure to comply could prevent the relief valve from operating as needed, resulting in possibility of severe personal injury, death or substantial property damage.
- **Use two wrenches when tightening any pipe connection to the boiler**. Failure to prevent the boiler pipes from turning could damage pipes or heat exchanger, resulting in possible severe personal injury, death or substantial property damage.

Hydrostatic Pressure Test

Pressure test the boiler before permanently attaching water or gas piping or electrical supply.

Install Pipe Fittings for Relief Valve and P/T Gauge

1. Install the reducer bushings, reducing tees, and close nipples, shipped loose with the boiler, located and oriented as shown in **Figure 12, page 21**.

NOTICE

Boilers installed in locations with less than the RECOMMENDED service clearances will need to adjust piping layout to meet space requirements.

2. Apply pipe dope to all fittings sparingly.

WARNING

- **DO NOT install the relief valve until after the hydrostatic test**. Temporarily install a ¾" pipe plug in the relief valve location as directed in these instructions. The plug must be removed after the test.
- **Connect the relief valve ONLY on the BOILER SUPPLY OUTLET, NOT** the boiler return. Connect the relief valve only as shown in this manual. Ensure relief valve is located above heat exchanger.

  Failure to comply with the above could prevent the relief valve from operating as needed, resulting in possibility of severe personal injury, death or substantial property damage.

3. Install the pressure/temperature gauge to the reducing tee as shown in **Figure 12, page 21**.

Install Fittings and Valves Required for Hydrostatic Testing

1. The following piping components (supplied by installer) are required for the test configuration:
   a. Two isolation shut-off valves [1" NPT (110), 1¼" NPT (155/220), or 1½" NPT (299-399)].
   b. Two close nipples [1" NPT (110), 1¼" NPT (155/220), or 1½" NPT (299-399)].
   c. ¾" NPT pipe plug.
2. **TEMPORARILY** insert a ¾" NPT pipe plug in the relief valve tapping. After the hydrostatic test, this plug must be removed and the relief valve must be installed.

Fill and Pressure Test

1. See **Figure 13, page 21** for use with the following instructions.
2. CLOSE the boiler drain valve (item 11). Connect a hose to fresh water supply and to the drain valve.
3. Place a bucket under the ends of the isolation valves (items 9 and 10) to catch water drippings.
4. CLOSE isolation valve item 10, then crack open the valve slightly. Leave isolation valve item 9 open.
5. Slowly open the boiler drain valve (item 11) and fresh water supply to fill boiler with water. The boiler and piping will fill quickly because of the low water content.
6. When water begins to flow from bottom isolation valve (item 10), close the valve.
7. Continue filling until water flows from top isolation valve (item 9), then close the valve.
8. When pressure on the pressure/temperature gauge (item 4) reaches at least 45 PSIG for a 30 PSIG relief valve, but no higher than 55 PSIG, CLOSE the boiler drain valve (item 11, 220 - 399 only): 75 PSIG for a 50 PSIG relief valve; or 120 PSIG for a 80 PSIG relief valve.
9. Hold at test pressure for 10 minutes.

WARNING

Do not leave boiler unattended. A cold water fill could expand and cause excessive pressure, resulting in severe personal injury, death or substantial property damage.

10. Make sure constant gauge pressure has been maintained throughout test. Check for leaks. Repair if found.

WARNING

- **Leaks must be repaired at once.** Failure to do so can damage boiler, resulting in substantial property damage.
- Do not use petroleum-based cleaning or sealing compounds in boiler system. Gaskets and seals in the system may be damaged. This can result in substantial property damage.

Drain and Remove Fittings

1. Disconnect fill water hose from water source.
2. Drain boiler through drain valve (item 11).

WARNING

Use caution when releasing pressure from the boiler. Rapid water flow could cause injury.

3. Remove hose after draining.
4. Remove nipples and valves unless they will remain for use in the system piping.
5. Remove plug and install relief valve as specified in the following WARNING.

WARNING

Remove plug from relief valve tee. Install the relief valve in the ¾" tee. See **page 61** or **page 66** to install relief valve discharge piping. Failure to install the boiler relief valve could result in severe personal injury, death or substantial property damage.

Boiler Hydrostatic Test (continued)

Figure 12 Install pipe fittings for relief valve and pressure/temperature gauge - **DO NOT mount relief valve until AFTER hydrostatic testing** *(see legend below)*

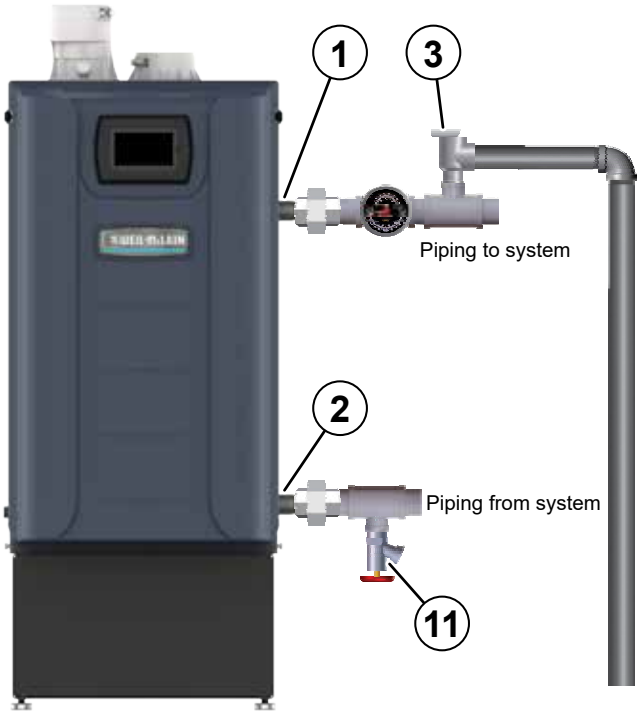

Figure 13 Install piping components required for hydrostatic test (*see legend below)*

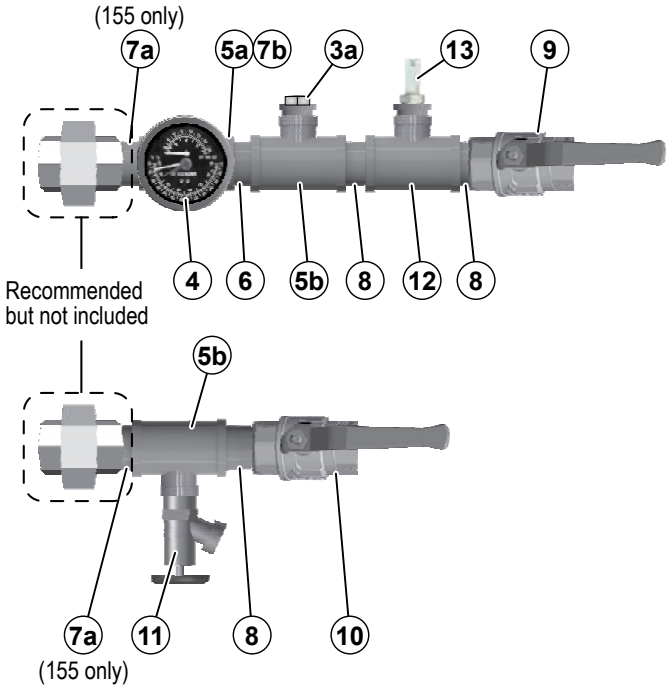

1. Boiler supply (outlet) connection, (male, 1" NPT on EVG 110-155, 1 ½" on EVG 220-399)
2. Boiler return (inlet) connection, (male, 1" NPT on EVG 110-155, 1 ½" on EVG 220-399)

3a. Boiler relief valve, shipped loose with boiler - DO NOT mount relief valve until AFTER hydrostatic testing.

3b. **TEMPORARILY ONLY** - Insert a ¾" NPT plug in the relief valve tapping of the reducing tee. **This MUST BE REMOVED after the test and the relief valve mounted here**.

4. Pressure/temperature gauge, shipped loose with boiler

5a. Reducing tee, NPT, 1 " x 1 " x ¼" on 110, 1 ¼" x 1 ¼" x ¼" on 155, 1 1/2" x 1 ¼" x ¼" on 220, 1 ½" x 1 ½" x ¾" on 299/300/399, shipped loose with boiler

5b. Reducing tee, NPT, 1 " x 1 " x ¾" on 110, & 1 ¼" x 1 ¼" x ¾" on 155, 1 ½" x 1 ¼" x ¾" on 220, 1 ½" x 1 ½" x ¾" on 299/300/399, shipped loose with boiler

6. Nipple, NPT 1" x close on 110, & 1 ¼" x close on 155/220, 1 ½" x close on 299/300/399, shipped loose with boiler

7a. Bushing, NPT, 1 ¼" x 1" on 155

7b. Bushing, NPT, ¾" x ¼" on 299/300/399, shipped loose with boiler

8. Nipple, NPT 1" x close on 110, & 1 ¼" x close on 155/220, 1 ½" x close on 299/300/399, by installer

9. Isolation valve on supply connection, by installer (1" NPT on 110, 1¼" NPT on 155/220, 1 ½" NPT on 299/300/399)

10. Isolation valve on return connection, by installer (1" NPT on 110, 1¼" NPT on 155/220, 1 ½" NPT on 299/300/399)

11. ¾" NPT boiler drain valve, shipped loose with boiler - after hydrostatic testing, move drain valve to lowest point on the return piping if not already there.

12. Reducing Tee, NPT 1" x 1" x ½" on 110, 1 ¼" x 1 ¼" x ½" on 155, 1½" x 1½" x ½" on 220-399. If alternative LWCO is used, reducing Tee with ¾" port is needed.

13. LWCO Sensor (½" NPT), shipped loose with boiler

Converting Boiler to Propane - EVG 110

Prepare Boiler for Propane - EVG 110 only (if required)

Propane Operation

⚠ WARNING

- **ALL Evergreen® Pro boilers must be converted for propane operation**.
- **Converting an existing natural gas-fired boiler for propane** - For a boiler already installed, you must turn off gas supply, turn off power and allow boiler to cool before proceeding. You must also completely test the boiler after conversion to verify performance and start up the boiler following instructions beginning on **page 99** of this manual.
- **Verify 110 propane gas orifice size** (See **Figure 14**). Verify when installing that the orifice size marking is correct. Orifices will be stamped as in illustration or "3.7" for model 110.
- Failure to comply could result in severe personal injury, death or substantial property damage.

Installing Propane Orifice - EVG 110 only

⚠ WARNING

- **If the boiler is already installed** - You must turn off electrical supply to the boiler and close the external manual gas shut-off valve to isolate the boiler during conversion. Allow the boiler to cool if it has been operating.
- Following conversion of an installed boiler, follow all instructions in this manual to start up the boiler and verify operation of the boiler and all system components.

1. Locate the propane orifice from the propane conversion kit bag.
2. Verify that the stamping on the orifice is correct for the model size (see **Figure 14**).
3. If the jacket door is not already removed, remove it.
4. Locate the gas valve and venturi (see **Figure 15**).
5. Release the gas line from the silencer bracket clip (item 5, **Figure 16, page 23**) and rotate it out of the way.
6. Use a T25-mm torx bit to remove the two (2) bolts (item 3) that secure the gas valve to the venturi.
7. See **Figure 16**. Carefully pull the gas valve down until it is free of the venturi. Securely support the gas valve - DO NOT leave it dangling.
8. Remove the rubber boot from the gas valve or venturi.
9. Insert the propane gas orifice into the rubber boot. Orifice must be seated into the inner groove inside the center of the rubber boot.

Figure 14 Propane gas orifice identification **EVG** 110 (may be stamped **3.7** only)

EVG-160

Figure 15 EVG 110 Gas valve and venturi

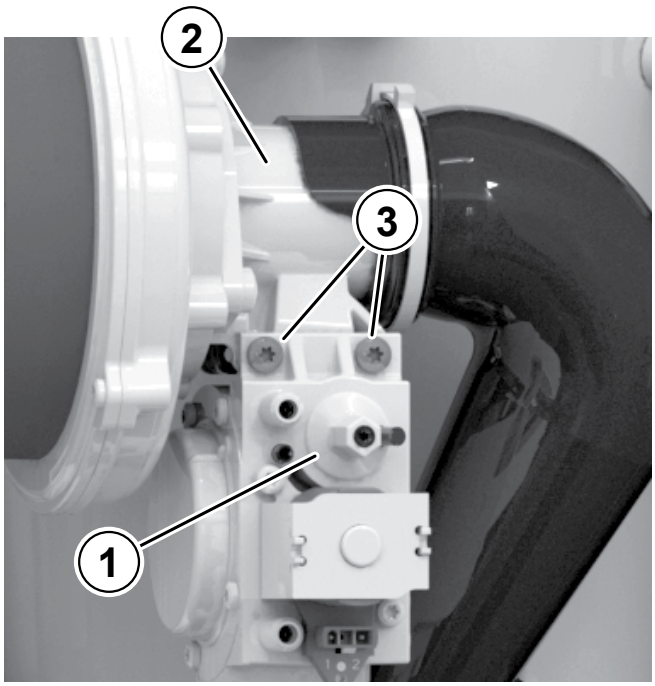

1. Gas valve
2. Venturi
3. Gas valve screws to venturi

⚠ WARNING

Support the gas valve after disconnecting it. DO NOT allow it to hang from the gas valve flex line. When re-attaching the gas valve, ensure the gas valve propane orifice is properly seated in rubber boot (item 6, **Figure 16, page 23**) and is in place and in good condition. Inspect the gas valve flex line to ensure it is undamaged and in good condition.

Converting Boiler to Propane - EVG 110 (continued)

Figure 16 EVG 110 - Installing the propane gas orifice (some details omitted for clarity)

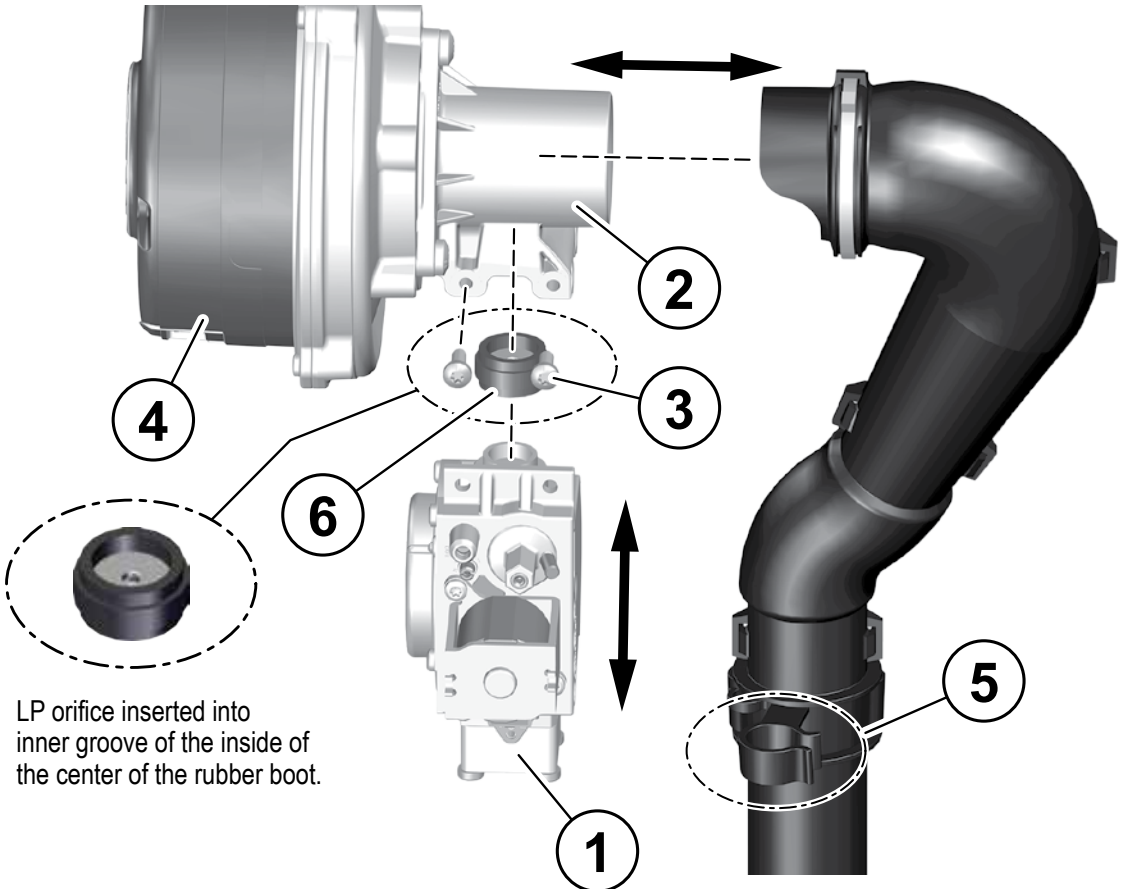

10. Install the rubber boot (item 6) guaranteeing that it is firmly seated on the gas valve opening.

DANGER

When re-attaching the gas valve, ensure the gas valve rubber boot (item 6, **Figure 16**) is in place and in good condition. Failure to comply will cause a gas leak, resulting in severe personal injury or death.

11. Reposition gas valve onto the venturi and reinstall the gas valve retention bolts (item 3). Make sure the rubber boot is fully seated on both the gas valve and venturi.
12. Swing the silencer bracket clip (item 5) back into position and snap on to the gas line.

WARNING

DO NOT ATTEMPT TO MEASURE VALVE OUTLET PRESSURE. The valve could be damaged by manometer fluid contamination. Failure to comply could result in severe personal injury, death or substantial property damage.

13. After installation is complete, attach the propane conversion label (in conversion kit bag) next to the boiler rating plate.

LEGEND for Figure 16

1. Gas valve
2. Venturi
3. Bolts (2) for attaching gas valve to venturi
4. Blower
5. Air silencer bracket clip
6. Propane orifice with boot

Converting Boiler to Propane - EVG 110 (continued)

14. Perform complete start-up sequence (beginning on page 118), including check for gas leaks and checking for proper operation.
15. Reinstall jacket door.
16. When boiler has not been fired, follow instructions on the initial screens to select propane as the gas type. If natural gas was already selected in the boiler control, the gas type parameter will need to be adjusted. In the contractor menu, under the Boiler Settings menu, adjust the Fuel Type setting to 'Propane', see Figure 33, page 31.
17. Before firing, verify that the Boiler Settings are for propane, “Max Rate” for the input (priority) used to fire the boiler is set at 100%. Also verify that the “Min Rate” is set to 10% or the minimum rate allowed (if above 2000 ft. elevation). Adjust control settings if not at proper rate. Verify that boiler is operating at the expected firing rate at both high- and low-fire during combustion analysis.

⚠ WARNING

The jacket door must be in place during operation. DO NOT operate the boiler with the jacket door removed except for inspection and testing as directed in this manual.

Figure 17 **Evergreen®** fuel type setting screen

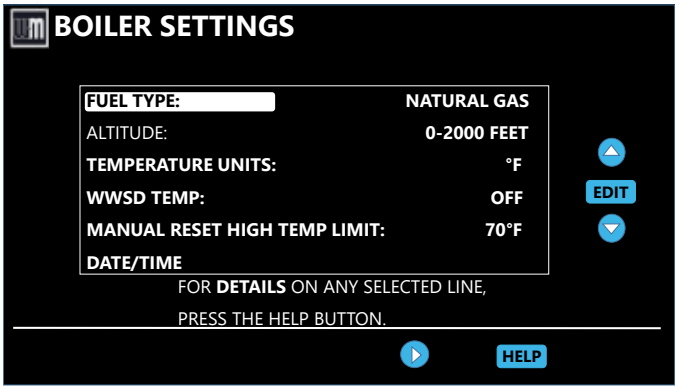

Figure 18 Evergreen® Pro 110 Natural and Liquefied Petroleum (Propane) gas conversion kit

Evergreen® Pro 110 Natural Gas to Propane Gas conversion kits

EVG 110 LP P/N 540-131-088 NG to Propane Gas Conversion Kit Contents:	
Orifice Gas Liquefied Petroleum (Propane) 3.7mm Inside Diameter	1
Label Gas Conversion	1
Instructions Conversion Nat to LP Gas	1

Converting Boiler to Propane - EVG 155

Prepare Boiler for Propane - EVG 155 only (if required) Propane Operation

WARNING

- **ALL Evergreen® Pro boilers must be converted for propane operation**.
- **Converting an existing natural gas-fired boiler for propane** - For a boiler already installed, you must turn off gas supply, turn off power and allow boiler to cool before proceeding. You must also completely test the boiler after conversion to verify performance and start up the boiler following instructions beginning on **page 118** of this manual.
- **Verify propane gas orifice size** - See **Figure 19**. Verify when installing that the orifice size marking is correct. Orifice will be stamped as in illustration.

  Failure to comply could result in severe personal injury, death or substantial property damage.

Installing Propane Orifice - EVG 155 only

WARNING

- **If boiler is already installed** - You must turn off electrical supply to the boiler and close the external manual gas shut-off valve to isolate the boiler during conversion. Allow the boiler to cool if it has been operating.
- Following conversion of an installed boiler, follow all instructions in this manual to start up the boiler and verify operation of the boiler and all system components.

1. Locate the propane orifice from the propane conversion kit bag.
2. Verify that the stamping on the orifice is correct for the model size (see **Figure 19**).
3. If the jacket door is not already removed, remove it.
4. See **Figure 22, page 27** and **Figure 23, page 27** for the following.
5. Locate the gas valve and venturi (items 1 and 3).
6. Release the gas line to silencer bracket (item 6) from the gas line and rotate it forward out of the way.
7. Use a 5mm hex wrench to remove the three (3) Allen screws (item 2) that secure the gas valve to the venturi.
8. See **Figure 23, page 27**. Carefully pull the gas valve to the right until it is free of the venturi. Securely support the gas valve - DO NOT leave it dangling.

Figure 19 Propane gas orifice identification **EVG** 155

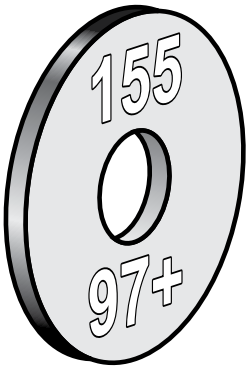

WARNING

Support the gas valve after disconnecting from the venturi. DO NOT allow it to hang from the gas valve flex line. When re-attaching the gas valve, ensure the gas valve grommet (item 8, **Figure 23, page 27**) is in place and in good condition. Inspect the gas valve flex line to ensure it is undamaged and in good condition.

9. Insert the propane gas orifice (item 7) into the gas valve opening as shown in **Figure 23, page 27**.
10. Make sure that the rubber grommet (item 8) is firmly seated in the gas valve opening.

DANGER

When re-attaching the gas valve, ensure the gas valve grommet (item 8, **Figure 23, page 27**) is in place and in good condition. Failure to comply will cause a gas leak, resulting in severe personal injury or death.

11. Reposition gas valve onto the venturi and reinstall the gas valve retention screws (item 2).
12. Swing the gas line to silencer bracket (item 6) back into position and snap onto the gas line.

WARNING

DO NOT ATTEMPT TO MEASURE VALVE OUTLET PRESSURE. The valve could be damaged by manometer fluid contamination. Failure to comply could result in severe personal injury, death or substantial property damage.

13. After installation is complete, attach the propane conversion label (in conversion kit bag) next to the boiler rating plate.
14. Perform complete start-up sequence (beginning on **page 88**), including check for gas leaks and checking for proper operation.
15. Reinstall jacket door.

Converting Boiler to Propane - EVG 155 (continued)

16. When boiler has not been fired, follow instructions on the initial screens to select propane as the gas type. If natural gas was already selected in the boiler control, the gas type parameter will need to be adjusted. In the contractor menu, under the Boiler Settings menu, adjust the Fuel Type setting to 'Propane', see **Figure 33, page 31.**
17. Before firing, verify that the Boiler Settings are for propane, “Max Rate” for the input (priority) used to fire the boiler is set at 100%. Also verify that the “Min Rate” is set to 10% or the minimum rate allowed (if above 2000 ft. elevation). Adjust control settings if not at proper rate. Verify that boiler is operating at the expected firing rate at both high- and low-fire during combustion analysis. Refer to **Figure 104** for proper low-fire rate based on altitude settings.

Figure 20 Evergreen® fuel type setting screen

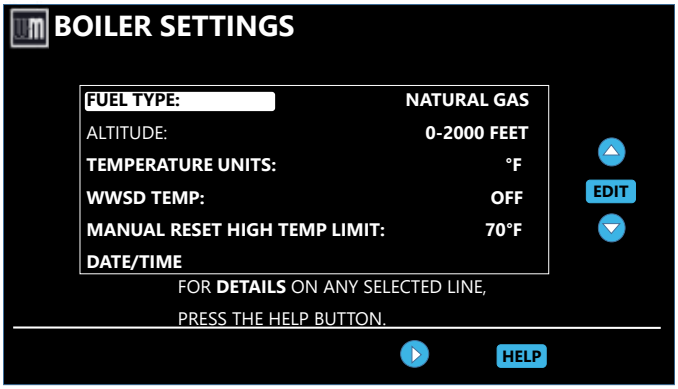

Figure 21 Evergreen® Pro 155 Natural and Liquefied Petroleum (Propane) gas conversion kit

Evergreen® Pro 155 Natural Gas to Propane Gas conversion kits

EVG 155 LP P/N 540-202-839 NG to Propane Gas Conversion Kit Contents:	
Orifice Gas Liquefied Petroleum (Propane) Round .2235 Inches	1
Instructions Conversion Nat to LP Gas	1

Converting Boiler to Propane - EVG 155 (continued)

Figure 22 Installing the propane gas orifice (some details omitted for clarity)

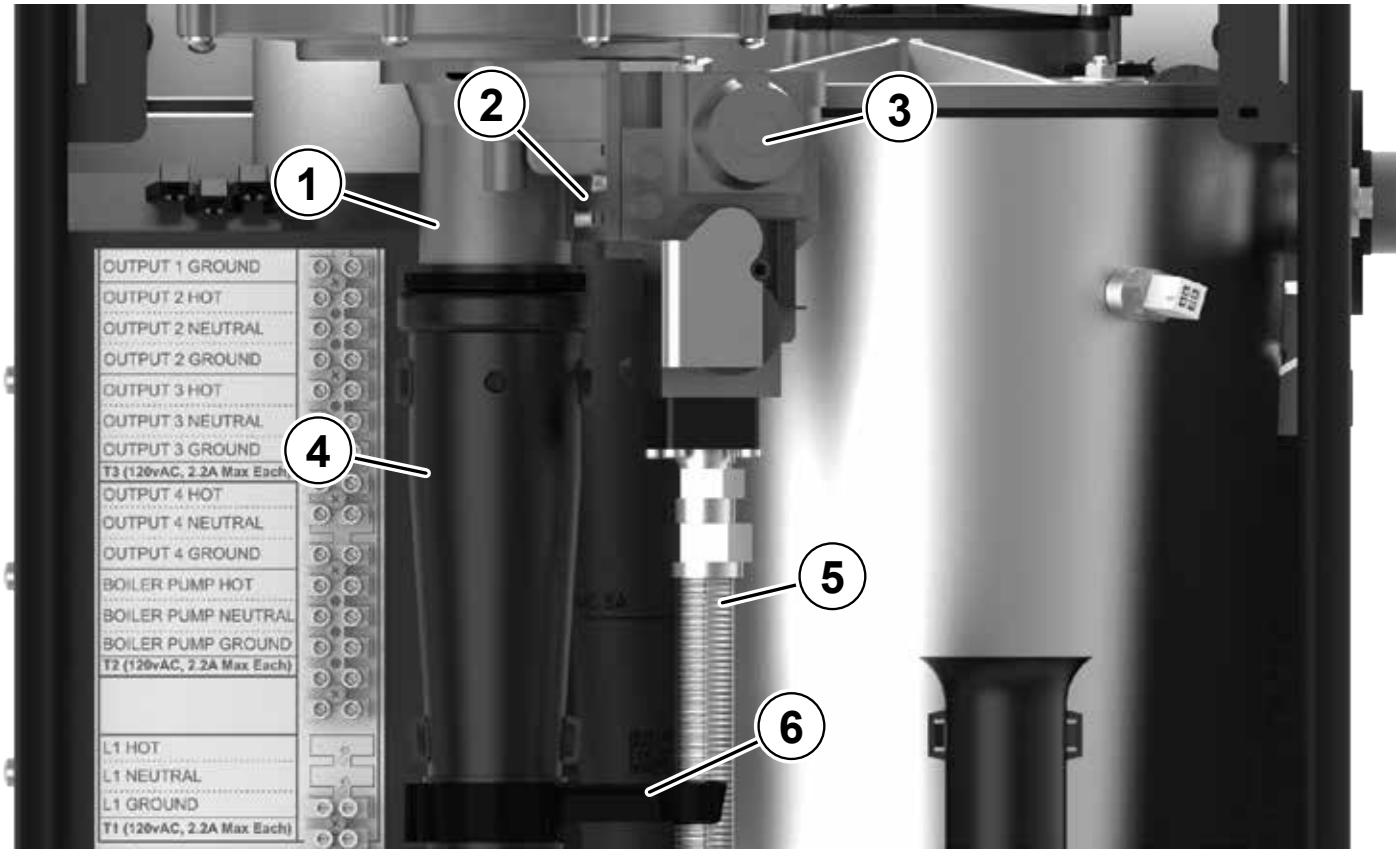

LEGEND for Figure 22 and Figure 23

1. Venturi (leave venturi attached to blower)
2. (3) hex-head screws, 5 mm hex (remove and retain)
3. Gas valve
4. Air silencer (leave connected to venturi)
5. Flexible gas line
6. Gas line to silencer bracket (rotate forward before disconnecting gas valve from venturi
7. Propane orifice (in propane conversion kit envelope)
8. Rubber grommet (must be installed in valve for all applications) - make sure grommet is properly seated in valve before inserting the propane orifice

WARNING

The jacket door must be in place during operation. DO NOT operate the boiler with the jacket door removed except for inspection and testing as directed in this manual.

Figure 23 Gas valve and venturi

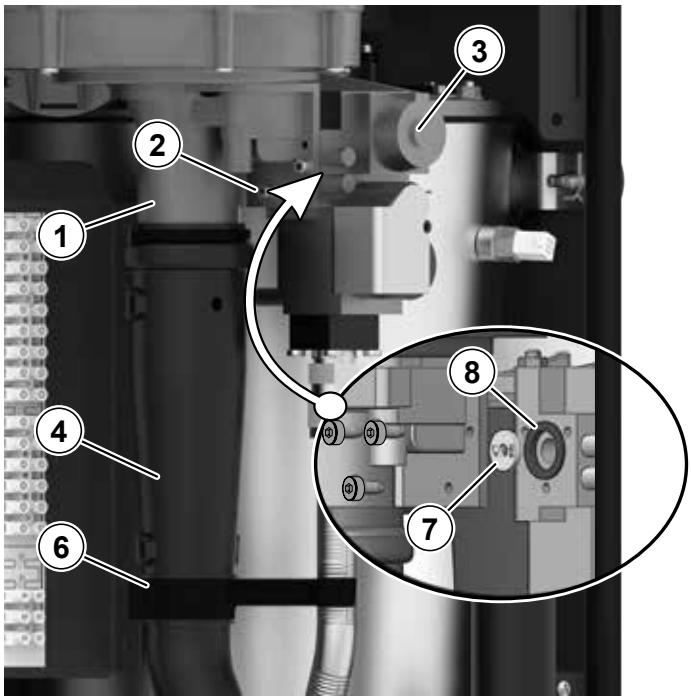

Gas Conversions - 220-399

Prepare Boiler for Propane - Evergreen® Pro 220/299/300/399 (if required)

Propane Operation

⚠ WARNING

- **ALL** Evergreen® Pro **boilers must be converted for propane operation**.
- **Converting an existing natural gas-fired boiler for propane** - For a boiler already installed, you must turn off gas supply, turn off power and allow boiler to cool before proceeding. You must also completely test the boiler after conversion to adjust gas valve to proper setting, verify performance, and start up the boiler following instructions beginning on **page 118** of this manual.
- **Verify propane gas venturi -** See **Figure 25, page 29** Propane Gas (LP) gas venturi will have a black label and will be clearly labeled "LP".

  Must change control settings to proper gas type.

  Failure to comply could result in severe personal injury, death or substantial property damage.
- This conversion kit shall be installed by a qualified service agency in accordance with the manufacturer's instructions and all applicable codes and requirements of the authority having jurisdiction. If the information in these instructions is not followed exactly, a fire, an explosion or production of carbon monoxide may result causing property damage, personal injury or loss of life. The qualified service agency is responsible for the proper installation of this kit. The installation is not proper and complete until the operation of the converted appliance is checked as specified in the manufacturer's instructions.

Figure 24 Natural and Liquefied Petroleum (Propane) gas conversion kits

Natural Gas to Propane Gas conversion kits

EVG 220 LP P/N 383-900-322 NG to Propane Gas Conversion Kit contents:	
Venturi - Liquefied Petroleum (Propane) Gas	1
Orifice Gas Liquified Petroleum (Propane) 220 EVGS2	1
Screw Pan Hd T20 M4x12 w/Square Cone Lock Washer	3
Washer .89 ID x 1.19 OD Garlock	1
O-Ring 3mm x 70mm Black	1
Gasket 1-Lips EPDM Ring 60 Dia mm	1
Label Gas Conversion	1
Instructions Conversion Nat to LP Gas	1

Natural Gas to Propane Gas conversion kits (continued)

EVG 299/300 LP P/N 383-900-323 NG to Propane Gas Conversion Kit Contents:	
Venturi - Liquefied Petroleum (Propane) Gas	1
Orifice Gas Liquified Petroleum (Propane) 299/300 EVGS2	1
Screw Pan Hd T20 M4x12 w/Square Cone Lock Washer	3
Washer .89 ID x 1.19 OD Garlock	1
O-Ring 3mm x 70mm Black	1
Gasket 1-Lips EPDM Ring 60 Dia mm	1
Label Gas Conversion	1
Instructions Conversion Nat to LP Gas	1

EVG 399 LP P/N 383-900-324 NG to Propane Gas Conversion Kit contents:	
Venturi - Liquefied Petroleum (Propane) Gas	1
Orifice Gas Liquified Petroleum (Propane) 399 EVGS2	1
Screw Pan Hd T20 M4x12 w/Square Cone Lock Washer	3
Washer .89 ID x 1.19 OD Garlock	1
O-Ring 3mm x 70mm Black	1
Gasket 1-Lips EPDM Ring 60 Dia mm	1
Label Gas Conversion	1
Instructions Conversion Nat to LP Gas	1

Gas Conversions - 220-399 (continued)

WARNING

- Follow all instructions in proper order.
- Do not tamper with venturi. DO NOT change or modify venturi in any way.
- Dispose of an uninstalled venturi; do not leave in the building.
- Caution – the gas supply shall be shut off prior to disconnecting the electrical power, before proceeding with the conversion.
- Whenever the venturi is removed, all gaskets must be replaced with new gaskets.

Pipe Sizing for Propane Gas

1. Contact gas supplier to size pipes, tanks and 100% lockup gas pressure regulator.

Installing Propane Venturi

1. Propane venturi will have a black label identifying venturi part number. See **Figure 24, page 28** for correct part number.
2. Verify that the label on the propane venturi is correct for the model size (see **Figure 25** below).
3. If the jacket front door was not already removed, remove it.
4. Locate the blower and venturi (see **Figure 27**).
5. Gently pull on both silencer retaining clips (**Figure 27**, item 2) and remove air silencer from front of venturi (item 3).

Figure 25 Propane gas venturi label identification (Black label)

Boiler Model	Part Number	Gas Type	Venturi Ø
EVG 220	383-900-322	LPG	30
EVG 299/300	383-900-323	LPG	34
EVG 399	383-900-324	LPG	38

Figure 26 Natural gas venturi label identification (White label)

Boiler Model	Part Number	Gas Type	Venturi Ø
EVG 220	383-900-054	NG	30
EVG 299/300	383-900-055	NG	34
EVG 399	383-900-056	NG	38

LEGEND for Figures 27, 28, 29 and 30

1. Air Silencer
2. Air silencer clips (2)
3. Venturi
4. Blower
5. Gas valve
6. Gas pipe
7. Swivel nut
8. Fiber Washer
9. Propane Gas (LP) Orifice

Figure 27 Air silencer removal

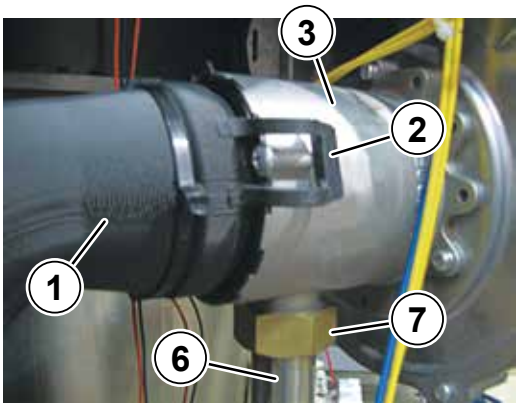

Label Wires Before Removing

CAUTION

Label all wires prior to disconnection when servicing controls. Wiring errors can cause improper and dangerous operation.

6. Disconnect wire harness from gas valve.
7. Loosen swivel nut (**Figure 27**, item 7) on venturi-gas valve connection (item 6). See **Figure 28**. Gently set gas valve a side.

Figure 28 Gas pipe loosened for propane conversion

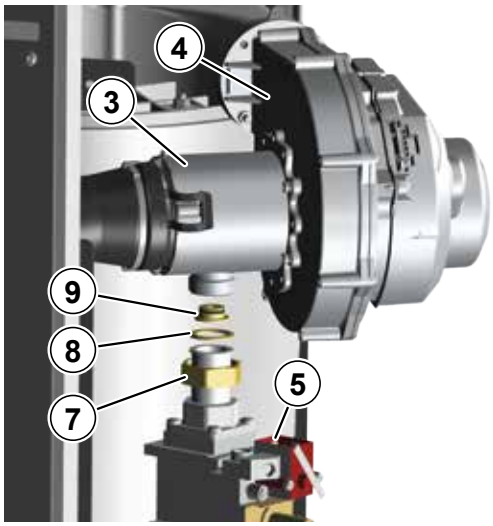

Gas Conversions - 220-399 (continued)

WARNING

Use two wrenches when tightening gas piping at boiler, using one wrench to prevent the boiler gas line connection from turning. Failure to support the boiler gas connection pipe to prevent it from turning could damage gas line components.

Figure 29 Removal of Natural gas venturi

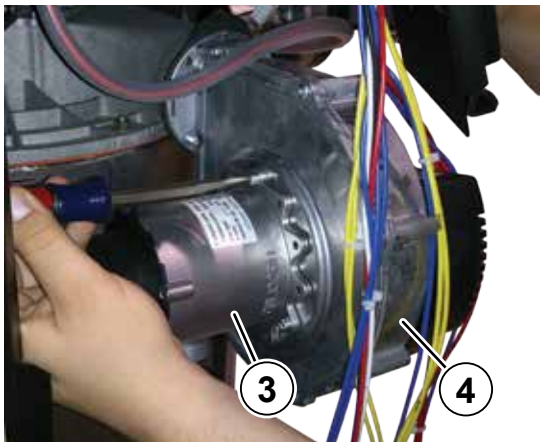

8. Remove three (3) T20 Torx screws holding the venturi, (item 3) in place. Remove venturi, o-ring, and inspect blower surface. Discard old o-ring and fiber washer, see **Figure 29**.
9. Install new propane venturi and o-ring from conversion kit.
10. Ensure o-ring is seated properly in groove on blower.
11. Insert three (3) new Torx screws from conversion kit to hold venturi in place. Torque screws to no more than 23 inch-pounds.
12. When Propane gas (LP) orifice is included in kit, install orifice (Item 9) into venturi gas inlet, see **Figure 28**.
13. Reassemble gas pipe with new fiber washer from conversion kit to the venturi connection, using two wrenches to tighten swivel nut. Replace silencer gasket and re-attach air silencer to venturi. See **Figure 30**.

Figure 30 Installing the new propane gas venturi

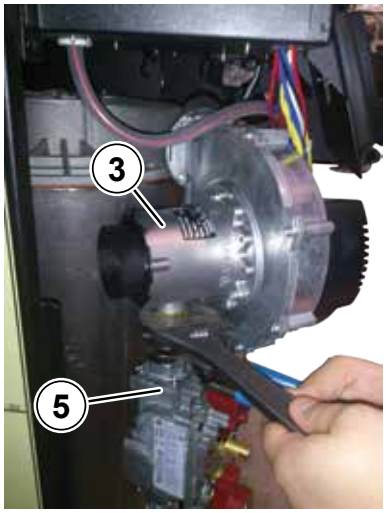

DANGER

Inspect the gas pipe fitting connections on the gas valve and new venturi (item 3, **Figure 30**). Check the seal of the connections. Failure to comply will cause a gas leak, resulting in severe personal injury or death.

WARNING

Do not check for gas leaks with an open flame - use bubble test. Failure to use bubble test or check for gas leaks can cause severe personal injury, death or substantial property damage.

14. Prior to the boiler's first ignition, adjust the throttle adjustment screw by first turning the screw clockwise (↻) until it bottoms out – do not apply any additional or excess torque. Adjust the throttle screw in a counterclockwise (↺) direction with precisely the number of turns listed in **Table 1** or **Table 2** according to the boiler model/size and whether Propane Gas (LP) orifice is provided in kit.

    Note: If a Propane Gas (LP) orifice is included in purchased kit, it is highly recommended to use the orifice for throttle adjustment safety.

Table 1. Course adjustment settings - Throttle and offset adjustments to be made prior to first ignition, by size. (without Propane Gas (LP) orifice)

Boiler Model	Throttle Turns (Counterclockwise ↺ from Bottom-out Position)	Offset Turns (Counterclockwise ↺ Factory NG Position)
EVG 220 Propane Gas (LP)	5/8	1/2
EVG 299/300 Propane Gas (LP)	1-3/8	3/8
EVG 399 Propane Gas (LP)	1-5/8	3/8

Use these adjustments when Propane Gas (LP) orifice is not included in kit.

Table 2. Course adjustment settings - Throttle and offset adjustments to be made prior to first ignition, by size. (with orifice)

Boiler Model	Throttle Turns (Counterclockwise ↺ from Bottom-out Position)	Offset Turns (Counterclockwise ↺ Factory NG Position)
EVG 220 Propane Gas (LP)	1 3/4	1/2
EVG 299/300 Propane Gas (LP)	2 1/2	3/8
EVG 399 Propane Gas (LP)	2 3/4	3/8

* See latest Propane Gas (LP) kit instructions for adjustment details when using Propane Gas (LP) gas orifice.

Gas Conversions - 220-399 (continued)

Note: Please refer to the gas conversion instructions for gas valve adjustments.

15. After the throttle has been adjusted coarsely, the offset regulating screw must be adjusted. Remove the sealed, slotted cap protecting the white offset regulating screw before making adjustments. It is critical to be precise for the adjustment of the offset regulating screw. DO NOT attempt to bottom out the offset regulating screw as was done for the throttle adjustment. Adjustments to the offset regulating screw should be made from the factory-provided natural gas position.

Figure 31 Gas valve adjustment locations - ONLY for use by a qualified technician, using properly working, calibrated combustion test instruments.

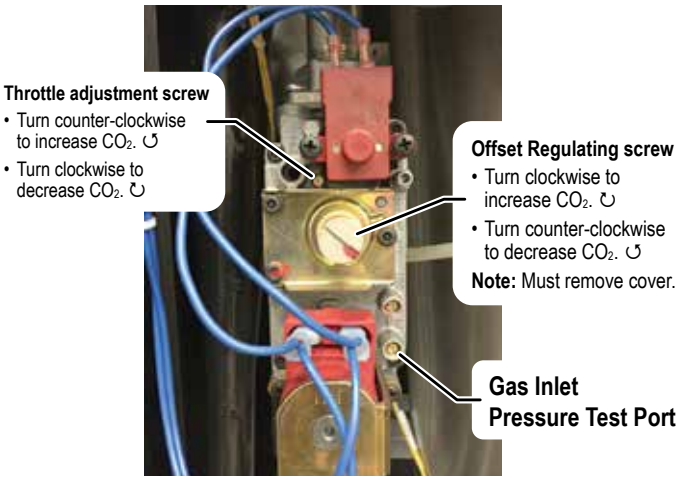

Adjust the Offset Regulating Screw using the following steps, referencing Figure 32:

a. Use a marker to mark the corner of one tip of the cross on the offset regulating screw and the corresponding location on the outside of the screw housing, as shown in **Figure 32**a.

b. Adjust the offset regulating screw in a counterclockwise (↺) direction with precisely the number of turns listed in **Table 1**, according to the boiler model/size.

16. Reconnect wire harness to gas valve.

Figure 32 Offset regulating screw adjustment - (a) Marking factory-provided NG position. (b) View after 3/4 turn CCW adjustment.

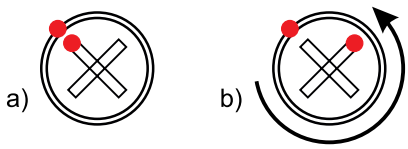

17. Restore electrical power, turn on gas by opening manual gas valve and check for leaks.

18. When boiler has not been fired, follow instructions on the initial screens to select propane as the gas type. If natural gas was already selected in the boiler control, the gas type parameter will need to be adjusted. In the contractor menu, under the Boiler Settings menu, adjust the Fuel Type setting to 'Propane', see **page 107**.

Figure 33 Evergreen® Pro fuel type setting screen

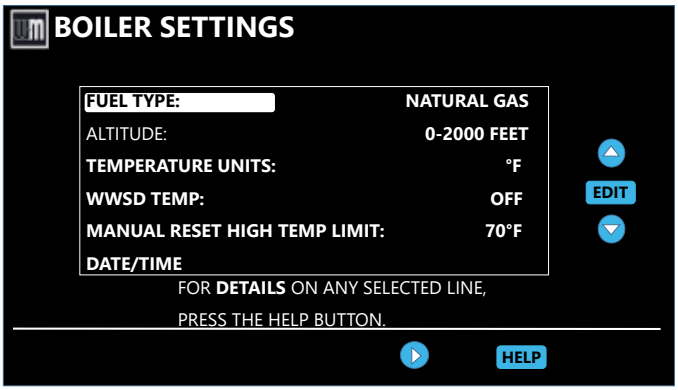

Table 3. Low-fire blower speeds - Minimum blower speed settings according to altitude settings.

Altitude Setting (ft.)	Lowest Rate for Altitude		
	220	299/300	399
0-2000	10%	10%	10%
2500	11%	11%	12%
3000	11%	11%	12%
3500	12%	11%	12%
4000	12%	12%	13%
4500	13%	12%	13%
5000	13%	12%	13%
5500	13%	13%	14%
6000	14%	13%	14%
6500	14%	13%	14%
7000	15%	14%	15%
7500	15%	14%	15%
8000	15%	14%	16%
8500	16%	14%	16%
9000	16%	15%	16%
9500	17%	15%	17%
10000	17%	15%	17%
10500	17%	16%	17%
11000	18%	16%	18%

19. Before firing, verify that the Boiler Settings are for propane, “Max Rate” for the input (priority) used to fire the boiler is set between 96% and 100%. Also verify that the “Min Rate” is set to 10% or the minimum rate allowed (if above 2000 ft. elevation). Adjust control settings if not at proper rate. Verify that boiler is operating at the expected firing rate at both high- and low-fire during combustion analysis. Refer to **Figure 104** for proper low-fire rate based on altitude settings.

Gas Conversions - 220-399 (continued)

20. Prior to turning on the boiler, review the procedure and control sequence for the operation of the **Manual Test Mode for Single and Multiple Boilers** starting on **page 133**. The procedure differs between boilers set as a single or multiple-boiler unit.

DANGER

The use of a flue gas analyzer is required to convert this unit and determine proper gas valve settings. Do not perform this conversion without a flue gas analyzer. Improper gas valve settings can cause severe personal injury, death, or property damage.

21. Do NOT allow the boiler to modulate freely until the combustion analysis and adjustment is complete. Turn on and connect properly working, calibrated combustion analyzer to the boiler flue pipe. Fire the boiler and force it to High Fire in Manual Test Mode. Adjust the high fire combustion first, using the throttle adjustment screw, to the CO_2 and CO ranges specified in **Figure 99, page 125**, by model size. Then, force the boiler to Low Fire and adjust the offset regulating screw to the CO_2 and CO ranges specified in **Figure 99, page 125**, by model size. Reinstall the slotted cap over the offset adjustment screw. Follow the full startup instructions found in this Boiler Manual including **"Re-check the Maximum and Minimum CO2 and CO rate" on page 126**.

22. The coarse adjustment prescribed by this manual should result in combustion settings that allow for ignition and are a starting point for further adjustment. If, after making the coarse adjustments prescribed above, the boiler will not light, turn the throttle screw only counterclockwise (↺) an additional 1/4 turn and attempt to light again. Repeat for a total of up to one full turn. If, after following the procedure above, the boiler still will not ignite or, during combustion analysis, the analyzer reads less than 1.0% O_2, contact Weil-McLain Technical Services for assistance.

23. Check for gas leaks and confirming proper performance.

Perform Boiler Manual Start-Up

Perform complete start-up sequence (beginning on **page 120**), including check for gas leaks and checking for proper operation.

After placing the boiler in operation, the ignition system safety shutoff device must be tested, **page 126**.

Install Front Door

WARNING

Install front door after servicing. The front door must be securely fastened to the boiler frame to prevent boiler from drawing air from inside the boiler room. This is particularly important if the boiler is located in the same room as other appliances. Failure to keep the door securely fastened could result in severe personal injury or death.

Figure 34 Installer conversion label

NOTICE THIS BOILER HAS BEEN CONVERTED TO PROPANE.

THIS MODEL _____ BOILER HAS BEEN CONVERTED

ON _____ (DATE OF CONVERSION) TO PROPANE GAS WITH A HIGH FIRE

% CO_2 OF _____ (% CO_2) CONVERSION KIT P/N: _____

BY _____ (NAME)

_____ (ADDRESS)

_____

WHO ACCEPTS THE RESPONSIBILITY FOR THE CORRECTNESS OF THIS CONVERSION.

NOTICE MINIMUM AND MAXIMUM GAS PRESSURE, MANIFOLD PRESSURE AND INPUT RATINGS DO NOT CHANGE WITH THIS CONVERSION. REFER TO THE RATING LABEL FOR THIS INFORMATION.

DANGER! DO NOT PERFORM THIS CONVERSION WITHOUT A FLUE GAS ANALYZER. THE PROPER USE OF A FLUE GAS ANALYZER IS REQUIRED TO DETERMINE PROPER GAS VALVE SETTINGS. IMPROPER GAS VALVE SETTINGS CAN CAUSE SEVERE PERSONAL INJURY, DEATH OR PROPERTY DAMAGE. SEE BOILER INSTALLATION MANUAL FOR GAS VALVE ADJUSTMENT INFORMATION.

AFFIX THIS LABEL AS CLOSE AS POSSIBLE TO THE RATING LABEL.

550-225-336 (0724)

Apply Installer Conversion Label

1. After installation is complete and boiler is set up for propane gas, fill out and attach the propane conversion label next to the boiler rating label (left side of cabinet).
2. Contractor/installer is responsible for completing the information required on label (provided in kit) and attaching installer conversion label next to the boiler rating label.

Gas Piping - Sizing Gas Lines

NOTICE

Boiler gas connection is ½" NPT for 110/155 and ¾" NPT for 220-399. Size gas lines large enough to provide gas to all connected appliances.

Natural Gas:

Pipe Sizing for Natural Gas

1. Size gas piping from meter outlet to entrance of boiler in accordance with **Figure 35** and **Figure 36**.
2. Use total input of all connected appliances. Divide total input in Btuh by 1,000 to obtain cubic feet per hour of natural gas.
   a. Pipe lengths in **Figure 35** are equivalent length of straight pipe. Convert pipe fittings to equivalent lengths using data from **Figure 36**.
   b. **Figure 35** is only for natural gas with specific gravity 0.60, with a pressure drop through the gas piping as listed in the table.
   c. For additional gas pipe sizing information, refer to ANSI Z223.1 NFPA 54 – latest edition (or Natural Gas and Propane Installation CAN/CSA B149.1 or B149.2 for Canadian installations).

Natural Gas Supply Pressure

1. Pressure required at gas valve inlet pressure port:
   a. Maximum: 14 inches (355 mm) w.c. with no flow (lockup).
   b. Minimum gas pressure, with gas flowing (verify during boiler startup, while boiler is at high fire):

      3½" (89 mm) w.c.

      Nominal gas pressure: 7.0" (178 mm) w.c.
2. Install 100% lockup gas pressure regulator in supply line if inlet pressure can exceed 14 inches (355 mm) w.c. at any time. Adjust lockup regulator for 14 inches (355 mm) w.c. maximum.

Propane Gas:

WARNING

You must follow the instructions, beginning on **page 22**, to operate the boiler on propane. Failure to comply could result in severe personal injury, death or substantial property damage.

Pipe Sizing for Propane Gas

1. Contact gas supplier to size pipes, tanks and 100% lockup gas pressure regulator.

Propane Supply Pressure

1. Adjust propane supply regulator provided by gas supplier for 14 inches (355 mm) w.c. maximum pressure.
2. Pressure required at gas valve inlet pressure port:
   a. Maximum: 14 inches (355 mm) w.c. with no flow (lockup).
   b. Minimum gas pressure, with gas flowing (verify during boiler startup, while boiler is at high fire):

      3½" (89 mm) w.c.

      Nominal gas pressure: 11.0" (279 mm) w.c.

Figure 35 Pipe capacity for 0.60 specific gravity natural gas; pipe length is in equivalent feet.

Gas pipe total length, feet	Capacity Cubic feet per hour, natural gas, 0.60 specific gravity Pressure drop 0.3 inches (7.6 mm) w.c.						
	½"	¾"	1"	1¼"	1½"	2"	2½"
10	132	278	520	1050	1600	3050	4800
20	92	190	350	730	1100	2100	3300
30	73	152	285	590	890	1650	2700
40	NA	130	245	500	760	1450	2300
50	NA	115	215	440	670	1270	2000
75	NA	105	175	360	545	1020	1650
100	NA	96	150	305	460	870	1400
150	NA	90	120	250	380	710	1130

Figure 36 Equivalent lengths of straight pipe for typical gas line fittings.

Pipe size inches	Equivalent length, feet	
	90° Elbow	Tee
½	1.55	3.10
¾	2.06	4.12
1	2.62	5.24
1¼	3.45	6.90
1½	4.02	8.04
2	5.17	10.30
2½	6.16	12.30

Gas Piping

⚠ WARNING

Evergreen® Pro boilers are shipped ready to operate on natural gas ONLY. You must convert the boiler to Propane Gas (LP) per the Gas Conversion section (starting on **page 28**) since 220-399 has mixer change, gas valve adjustments and control change to cover the boiler will be connected to propane. See **page 22**. Failure to comply could result in severe personal injury, death or substantial property damage.

Connecting Gas Supply Piping

1. Remove jacket door and refer to **Figure 37** to pipe gas to boiler.
   a. Place a pipe wrench on the gas line inside the jacket when tightening the gas line assembly to the boiler gas connection (item 1).
   b. Install steel pipe fittings and factory-supplied manual gas shut off valve as shown in **Figure 37**. All pipe fittings are supplied by the installer. The manual gas shut off valve is shipped loose with the boiler.
   c. In Canada - The manual gas shut off valve (item 2) must be identified by the installer.
2. Use pipe dope compatible with propane gases. Apply sparingly only to male threads of pipe joints so that pipe dope does not block gas flow.

⚠ WARNING

Failure to apply pipe dope as detailed above can result in severe personal injury, death or substantial property damage.

3. Connect gas supply piping to the ½" NPT 110/155, ¾" NPT for 220-399 manual gas shut off valve (item 2).
4. Support gas piping with hangers, not by boiler or its accessories.
5. Purge all air from gas supply piping.
6. Before placing boiler in operation, check boiler and its gas connection for leaks.
   a. During any pressure testing at less than 14 inches (355 mm) w.c., close the gas shutoff valve and disconnect system gas piping. At higher test pressures, disconnect boiler and gas valve from gas supply piping.

⚠ WARNING

- Do not check for gas leaks with an open flame - use bubble test. Failure to use bubble test or check for gas leaks can cause severe personal injury, death or substantial property damage.
- DO NOT adjust or attempt to measure gas valve outlet pressure. The gas valve is factory-set for the correct outlet pressure. This setting is suitable for natural gas and propane. Attempting to alter or measure the gas valve outlet pressure could result in damage to the valve, causing potential severe personal injury, death or substantial property damage.

Gas Pipe Sizing

1. See **page 33** for gas line sizing information.

Check Gas Pressure at Inlet to Boiler

1. See **Figure 97, page 124** (EVG 110), **Figure 98, page 125** (EVG 55), or **Figure 99, page 125** for location of the gas inlet pressure test port.

⚠ WARNING

Use two wrenches when tightening gas piping at boiler, using one wrench to prevent the boiler gas line connection from turning. Failure to support the boiler gas connection pipe to prevent it from turning could damage gas line components.

Figure 37 Connect gas supply piping

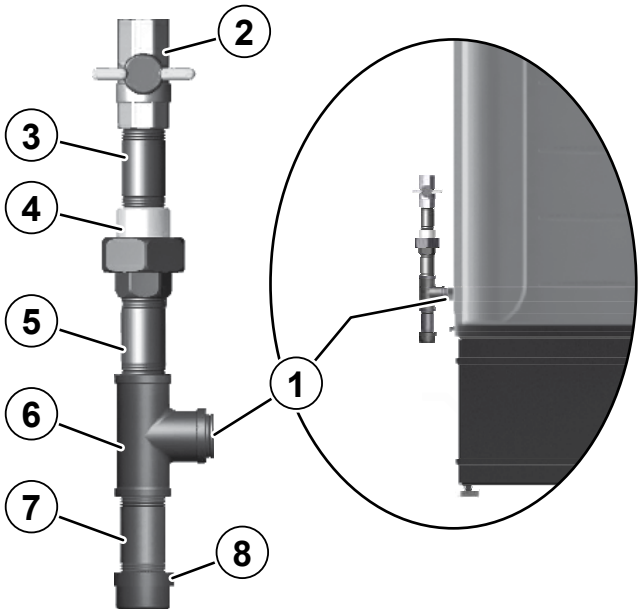

NOTE: 110/155 - ½" NPT, 220/299/300/399 - ¾" NPT

1. Boiler gas supply connection, male
2. Manual gas shut off valve, shipped loose with boiler

ALL OF THE FOLLOWING ARE SUPPLIED BY THE INSTALLER:

3. Nipple
4. Union
5. Nipple
6. Tee
7. Nipple, connection x 4", for drip leg
8. Cap

2. For natural gas or propane, the pressure required at gas valve inlet pressure port (verify minimum gas pressure when all gas appliances are in operation):
   a. Maximum: 14 inches (355 mm) w.c. with no flow (lockup) or with boiler on.
   b. Minimum gas pressure, with gas flowing (verify during boiler startup, while boiler is at high fire) : 3½" (89 mm) w.c.
   c. Nominal gas pressure: 7.0" (178mm) w.c.
3. Install 100% lockup gas pressure regulator in supply line if inlet pressure can exceed 14 inches (355 mm) w.c. at any time. Adjust lockup regulator for 14 inches (355 mm) w.c. maximum.

Venting & Air Piping - General

Any improper operation of the common venting system should be corrected so the installation conforms with the National Fuel Gas Code, ANSI Z223.1/NFPA 54 – latest edition, and/or the Natural Gas and Propane Installation Code, CAN/CSA B149.1. When resizing any portion of the common venting system, the common venting system should be resized to approach the minimum size as determined using the appropriate tables in Chapter 13 of the National Fuel Gas Code, ANSI Z223.1/NFPA 54 – latest edition, and/or the Natural Gas and Propane Installation Code, CAN/CSA B149.1.

DANGER

Do not install the Evergreen® Pro boiler into a common vent with any other appliance. This will cause flue gas spillage or appliance malfunction, resulting in possible severe personal injury, death or substantial property damage.

WARNING

- Existing common vent systems may be too large for the appliances remaining connected after the existing boiler is removed.
- Failure to follow all instructions can result in flue gas spillage and carbon monoxide emissions, causing severe personal injury or death.
- Use ONLY the venting materials and venting manufacturers' components and systems approved by Weil-McLain. Follow all instructions provided by the venting component and system manufacturer. Failure to do so can cause flue gas spillage and carbon monoxide emissions, resulting in severe personal injury or death.

Replacing a Boiler from an Existing Common Vent System

The Evergreen® Pro boiler cannot be common vented with any other appliance. When an existing boiler is replaced with an Evergreen® Pro boiler, the Evergreen® Pro boiler CANNOT use the existing common vent. The Evergreen® Pro boiler requires its own vent and air piping, as specified in this manual. This may cause a problem for the appliances that remain on the original common vent, because the vent may be too large.

Perform the test sequence below for each appliance remaining on the original common vent system. Operate each appliance individually with other appliances turned off. This procedure will test whether the common vent system can properly vent each appliance.

Existing Vent Test Procedure

(The following is intended to test whether the appliances remaining on an existing vent system will operate satisfactorily.)

1. Seal any unused openings in the common venting system.
2. Visually inspect the venting system for proper size and horizontal pitch and determine there is no blockage or restriction, leakage, corrosion or other deficiencies which could cause an unsafe condition.
3. Test vent system - Insofar as is practical, close all building doors and windows and all doors between the space in which the appliances remaining connected to the common venting system are located and other spaces of the building. Turn on clothes dryers and any appliance not connected to the common venting system. Turn on any exhaust fans, such as range hoods and bathroom exhausts, so they will operate at maximum speed. Do not operate a summer exhaust fan. Close fireplace dampers.
4. Place in operation the appliance being inspected. Follow the lighting instructions. Adjust thermostat so appliance will operate continuously.
5. Test for spillage at draft hood relief opening after 5 minutes of main burner operation. Use the flame of a match or candle, or smoke from a cigarette, cigar, or pipe.
6. After it has been determined that each appliance remaining connected to the common venting system properly vents when tested as outlined herein, return doors, windows, exhaust fans, fireplace dampers, and any other gas-burning appliance to their previous conditions of use.

WARNING

You must pipe combustion air to the boiler air intake unless using the Weil-McLain Direct Exhaust kit and meeting the Direct Exhaust requirements.

- Install air inlet piping for the Evergreen® Pro boiler as described in this manual.
- The air termination fitting must be installed with the clearances and geometry relative to the vent outlet depicted in this manual to ensure that flue products do not enter the air intake.
- Ensure that the combustion air will not contain any of the contaminants in **Figure 38**. Do not pipe combustion air near a swimming pool, for example. Avoid areas subject to exhaust fumes from laundry facilities. These areas will always contain contaminants.
- Contaminated combustion air will damage the boiler, resulting in possible severe personal injury, death or substantial property damage.

Figure 38 Corrosive contaminants and sources

Products to avoid
Spray cans containing chloro/fluorocarbons
Permanent wave solutions
Chlorinated waxes/cleaners
Chlorine-based swimming pool chemicals
Calcium chloride used for thawing
Sodium chloride used for water softening
Refrigerant leaks
Paint or varnish removers
Hydrochloric acid/muriatic acid
Cements and glues
Antistatic fabric softeners used in clothes dryers
Chlorine-type bleaches, detergents, and cleaning solvents found in household laundry rooms
Adhesives used to fasten building products and other similar products
Excessive dust and dirt

Areas likely to have contaminants
Dry cleaning/laundry areas and establishments
Swimming pools
Metal fabrication plants
Beauty shops
Refrigeration repair shops
Photo processing plants
Auto body shops
Plastic manufacturing plants
Furniture refinishing areas and establishments
New building construction
Remodeling areas
Garages with workshops

Venting & Air Piping - General (continued)

Venting with Flexible Polypropylene

For boilers allowed to utilize polypropylene vent systems.

Tests have determined that flex vent has a greater pressure drop than rigid polypropylene vent which changes the maximum allowable length of venting. Below are the equivalent lengths.

2

Table 3 Supplier and Size of Flex Pipe Vent Length - Equivalent

Flex Pipe Vent Length - Equivalent	
Duravent 3” diameter	1 foot equals 1.7 ft. 4 inches
Centrotherm 3” diameter	1 foot equals 2.3 ft. 4 inches

Example: Using 20 feet of Duravent 3”: 20’ x 1.7 = 34’ of equivalent length of straight pipe.

Knowing and identifying the correct equivalent length is essential to ensure the proper operation of our high efficiency boilers. The equivalent vent lengths for each specific size and manufacturer of venting.

Calculated equivalent feet shall not exceed maximum values listed in boiler manual.

All current boiler installations using polypropylene flex venting with concerns or questions should contact WM Technologies Technical Service for assistance, if our boiler is having operation issues that may be related to excess vent lengths.

Venting & Air Piping - General (continued)

Figure 39 Evergreen® Pro venting and air piping - DIRECT VENT ONLY - OPTIONS and PIPING LIMITS

NOTICE

The table below lists the acceptable vent/air pipe terminations described in this manual. Follow all instructions provided to install the vent/air system. **NOT SHOWN** below, but also approved, are the polypropylene piping and terminations listed in **Figure 40, page 38**. For these applications, use ONLY the manufacturers' parts listed and follow all instructions provided by the pipe manufacturer.

Maximum vent and air pipe length = 100 feet for all applications
(Minimum length for all applications is 2 feet)
(All applications include allowance for the termination fittings plus one elbow in air piping and one elbow in vent piping).

USE SWEEP ELBOWS ONLY

See **Figure 40, page 38** *for material specifications* | *See* **Figure 125, page 167** *for part/kit numbers*

Vent and air pipe sizes:
Maximum vent lengths apply for vent and air pipe.
Boilers will derate as vent/air pipe length increases - see rating data on **Figure 156, page 195** for derate amounts.

Evergreen® Pro Model	SIDEWALL termination						VERTICAL termination					
	Separate pipes [Note 1]		PVC or PP Concentric [Note 1]		3" Weil-McLain PVC vent/air cap [Note 1]		Separate pipes [Note 1]		PVC or PP Concentric [Note 1]		Vertical vent, Side Air [Note 1]	
	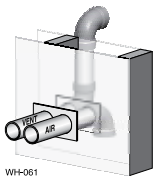		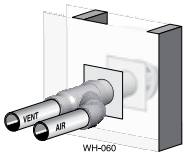				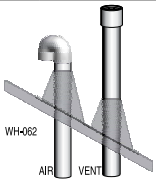		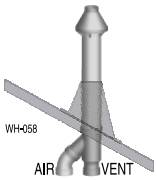		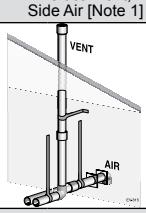	
	See page 44		See page 46		See page 48		See page 50		See page 52		See page 54	
	Size, inches	Materials Figure 40, page 38	Size, inches	Materials Figure 40, page 38	Size, inches	Materials Figure 40, page 38	Size, inches	Materials Figure 40, page 38	Size, inches	Materials Figure 40, page 38	Size, inches	Materials Figure 40, page 38
110	3	PVC/PVC-DWV CPVC, PP, SS	3	PVC Concentric only	–	–	3	PVC/PVC-DWV CPVC, PP, SS	3	PVC/PVC-DWV CPVC, PP, SS	3	PVC/PVC-DWV CPVC, PP, SS
155	3	PVC/PVC-DWV CPVC, PP, SS	3	PVC Concentric & PP**	3	PVC/PVC-DWV CPVC, PP, SS	3	PVC/PVC-DWV CPVC, PP, SS	3	PVC/PVC-DWV CPVC, PP, SS	3	PVC/PVC-DWV CPVC, PP, SS
	** Model 155 may be concentric sidewall vented using Centrotherm polypropylene pipe (Eco Systems InnoFlue® Single-wall) ONLY if using Centrotherm stainless steel concentric termination kit, part number ICWS3513.											
220	3	PVC/PVC-DWV CPVC, PP, SS	3	PVC Concentric only	3	PVC/PVC-DWV CPVC, PP	3	PVC/PVC-DWV CPVC, PP, SS	3	PVC/PVC-DWV CPVC, PP	3	PVC/PVC-DWV CPVC, PP, SS
	4	PVC/PVC-DWV CPVC, PP, SS	4	PVC Concentric only	4	PVC/PVC-DWV CPVC, PP	4	PVC/PVC-DWV CPVC, PP, SS	4	PVC/PVC-DWV CPVC, PP	4	PVC/PVC-DWV CPVC, PP, SS
299/ 300	4	PVC/PVC-DWV CPVC, PP, SS	4	PVC Concentric only	4	PVC/PVC-DWV CPVC, PP	4	PVC/PVC-DWV CPVC, PP, SS	4	PVC/PVC-DWV CPVC, PP	4	PVC/PVC-DWV CPVC, PP, SS
399	4	PVC/PVC-DWV CPVC, PP, SS	4	PVC Concentric only	4	PVC/PVC-DWV CPVC, PP	4	PVC/PVC-DWV CPVC, PP, SS	4	PVC/PVC-DWV CPVC, PP	4	PVC/PVC-DWV CPVC, PP, SS

WARNING

All elbows in vent and air piping must be sweep elbows ONLY. DO NOT use short-radius elbows. For 220 model, when transitioning to 4-inch to 3-inch, use tapered reducer with 4" PVC nipple (l ≥ 6"). Do not use 4-inch to 3-inch bushing. Bushing will not seal in boiler adapter.

For all models: Do not use Sweep Elbows directly in Adapters, they will not seal in boiler flue/exhaust adapter.

Equivalent feet for elbows (USE SWEEP ELBOWS ONLY) - deduct from max. equivalent length of piping (does not apply to termination fittings).

PVC • 7 feet per for each additional 90° sweep elbow or 5 feet per for each additional 45° elbow - If piping contains more than 1 elbow in air or vent piping, other than termination fittings.

	87° Elbow: PP	90° Elbow: PP	45° Elbow: PP		87° Elbow: PP	90° Elbow: PP	45° Elbow: PP	
PP •	Centrotherm	Duravent	Centrotherm	Duravent	Centrotherm	Duravent	Centrotherm	Duravent
	3" = 8'	3" = 7'	3" = 3'	3" = 3'	4" = 8'	4" = 12'	4" = 3'	4" = 5'

Note 1:	Material abbreviations: PP = polypropylene, SS = AL29-4C stainless steel If using polypropylene or stainless pipe other than Simpson-Duravent for the vent/flue adapter, provide adapters for 3" boiler connections. Terminations will require additional adapters if going to different size, material, or manufacturer from vent to termination. Terminations will require additional adapters if going to different size, material, or manufacturer from vent to termination, if required IPEX 3" PVC concentric vent kits can be used with standard PVC pipe, fittings and cement (ANSI/ASTM D1785) except if ULC S636 compliance is required. For ULC S636 compliance, all pipe, fittings and cement must be IPEX System 636. For UL 1738 compliance all pipe, fittings and cement must be IPEX System 1738. If using IPEX kits, use only IPEX product code listed in **Figure 125, page 167**. Contact Weil-McLain for ordering information and availability of Weil-McLain venting kits.
Note 2:	Use only Weil-McLain approved termination kits listed in **Figure 156, page 195**

Note: For Category IV installations, ensure the flue venting system is designed to maintain a slightly positive exhaust pressure which MUST not exceed **110:** 0.13" w.c.; **155:** 0.25" w.c.; **220:** 0.73" w.c.; **299/300:** 0.44"" w.c.; **399:** 0.86" w.c.

Venting & Air Piping - General (continued)

Figure 40 Vent and air piping materials - Use only the materials listed below, ensuring that all materials meet local codes (see **Figure 125, page 167** for part/kit numbers)

Item	Material	Standards for installations in:		
		United States	Canada (Note 2)	
Plastic piping materials		**Vent or air piping**	**Vent piping**	**Air piping**
Vent or air pipe & fittings	PVC schedule 40 (Note 1)	ANSI/ASTM D1785/UL1738/ ULC S636	ULC S636	ABS, PVC, PVC-DWV, CPVC or polypropylene
	PVC-DWV schedule 40 (Note 1)	ANSI/ASTM D2665	NA	
	CPVC schedule 40 (Note 1)	ANSI/ASTM F441/ULC S636	ULC S636	
	ABS-DWV schedule 40 (**Intake Only**)	ANSI/ASTM D2661	ULC S636	
PVC & ABS pipe cement & primer	PVC (Note 1)	ANSI/ASTM D2564/F656/ UL1738	ULC S636	Use only cement and primer suitable for piping material used
	CPVC (Note 1)	ANSI/ASTM F493	ULC S636	
	ABS schedule 40 (Note 1)	ANSI/ASTM D2235	ULC S636	
Polypropylene vent pipe, fittings, terminations and cement	Simpson-Duravent - Obtain all materials from M&G Simpson-Duravent Centrotherm Eco Systems InnoFlue® Single-wall - Obtain all materials from Centrotherm Note: See **page 166** for correct appliance adapters to be used.	See manufacturer's literature for detailed information ***MUST USE LOCKING COLLAR ON EVERY JOINT***	ULC S636	PVC, PVC-DWV, CPVC or polypropylene
AL29-4C stainless steel piping materials				
Vent pipe AL29-4C stainless steel	Heat Fab, Inc. - Saf-T-Vent® Z-Flex, Inc. - Z-Vent Dura-Vent - FasNSeal™ Metal-Fab, Inc. - CORR/GUARD Centrotherm Eco Systems - InnoFlue®	Certified for Category IV and direct vent appliance venting	Certified for Category IV and direct vent appliance venting	
Weil-McLain 3" or 4" stainless steel bird screens. *(purchase separately) - see* **Figure 125, page 167** *for part numbers*				

Note 1:
Weil-McLain concentric vent kits are made from PVC pipe and fittings.

Note 2:
System 636 PVC concentric terminations utilize PVC pipe/fittings certified to ULC S636.

If ULC S636 compliance is required, use only System 636 pipe, fittings and cement.

If UL1738 compliance is required, use only System 1738 pipe, fittings and cement.

WARNING

- DO NOT mix piping from different pipe manufacturers unless using adapters specifically designed for the purpose by the manufacturer.
- Every joint on **polypropylene vent piping must** include a locking collar.
- DO NOT use cellular core PVC (ASTM F891), cellular core CPVC, or Radel® (polyphenolsulfone) in venting systems.

WARNING

- DO NOT cover non-metallic vent pipe and fittings with thermal insulation.
- ADAPTERS - The boiler comes with a 3" or 4" 3-in-1 vent adapter as standard. This vent adapter allows the installation of 3" PVC schedule 40, CPVC schedule 40, PVC-DWV schedule 40, AL29-4C stainless steel (from Simpson-Duravent only) and Polypropylene 3" Duravent & Centrotherm (110/155 only) & 4" Duravent (220-399 only) can be used for vent connection. 4" Vent Adapter w/ Centrotherm requires an additional adapter. The inlet will only accept 3" PVC.
- ADAPTERS - AL29-4C piping - Install a PVC-to-stainless adapter supplied by the AL29-4C stainless pipe manufacturer at the 3" or 4" PVC boiler air inlet connection and at the termination (if using Weil-McLain plate or concentric PVC termination).
- ADAPTERS - Polypropylene piping - Provide adapters from polypropylene pipe to the 3" or 4" PVC air inlet connection at the boiler and at terminations, if required (Weil-McLain sidewall plate, for example).

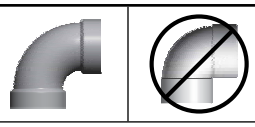

WARNING

USE SWEEP ELBOWS FOR ALL VENT AND AIR PIPING - DO NOT use short radius elbows for vent or air piping. Boiler performance could be affected.

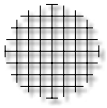

WARNING

ALL vent and air pipes require a **BIRD SCREEN at each termination**. Most kits do not include the bird screens. Purchase bird screens separately from Weil-McLain or vent kit supplier if not included. [Note - bird screening is integral to the 3" and 4" PVC Weil-McLain sidewall vent cap, available for purchase from Weil-McLain. No additional screening is required.]

Commonwealth of Massachusetts Installations

Commonwealth of Massachusetts - When the boiler is installed within the Commonwealth of Massachusetts, the boiler must be installed by a licensed plumber or gas fitter. Read and comply with the instructions below.

(a) **REQUIREMENTS:** For all sidewall horizontally-vented gas-fueled equipment installed in every dwelling, building or structure used in whole or in part for residential purposes, including those owned or operated by the Commonwealth and where the side wall exhaust vent termination is less than seven (7) feet above finished grade in the area of the venting, including but not limited to decks and porches, the following requirements shall be satisfied:

1. **INSTALLATION OF CARBON MONOXIDE DETECTORS**. At the time of installation of the side wall horizontal vented gas fueled equipment, the installing plumber or gas fitter shall observe that a hard wired carbon monoxide detector with an alarm and battery back-up is installed on the floor level where the gas equipment is to be installed. In addition, the installing plumber or gas fitter shall observe that a battery operated or hard wired carbon monoxide detector with an alarm is installed on each additional level of the dwelling, building or structure served by the side wall horizontal vented gas fueled equipment. It shall be the responsibility of the property owner to secure the services of qualified licensed professionals for the installation of hard wired carbon monoxide detectors.
   a. In the event that the side wall horizontally vented gas fueled equipment is installed in a crawl space or an attic, the hard wired carbon monoxide detector with alarm and battery back-up may be installed on the next adjacent floor level.
   b. In the event that the requirements of this subdivision can not be met at the time of completion of installation, the owner shall have a period of thirty (30) days to comply with the above requirements; provided, however, that during said thirty (30) day period, a battery operated carbon monoxide detector with an alarm shall be installed.
2. **APPROVED CARBON MONOXIDE DETECTORS**. Each carbon monoxide detector as required in accordance with the above provisions shall comply with NFPA 720 and be ANSI/UL 2034 listed and IAS certified.
3. SIGNAGE. A metal or plastic identification plate shall be permanently mounted to the exterior of the building at a minimum height of eight (8) feet above grade directly in line with the exhaust vent terminal for the horizontally vented gas fueled heating appliance or equipment. The sign shall read, in print size no less than one-half (1/2) inch in size, "GAS VENT DIRECTLY BELOW. KEEP CLEAR OF ALL OBSTRUCTIONS."
4. **INSPECTION**. The state or local gas inspector of the side wall horizontally vented gas fueled equipment shall not approve the installation unless, upon inspection, the inspector observes carbon monoxide detectors and signage installed in accordance with the provisions of 248 CMR 5.08(2)(a) 1 through 4.

(b) EXEMPTIONS: The following equipment is exempt from 248 CMR 5.08(2)(a)1 through 4:

1. The equipment listed in Chapter 10 entitled "Equipment Not Required To Be Vented" in the most current edition of NFPA 54 as adopted by the Board; and
2. Product Approved side wall horizontally vented gas fueled equipment installed in a room or structure separate from the dwelling, building or structure used in whole or in part for residential purposes.

(c) **MANUFACTURER REQUIREMENTS - GAS EQUIPMENT VENTING SYSTEM PROVIDED**. When the manufacturer of Product Approved side wall horizontally vented gas equipment provides a venting system design or venting system components with the equipment, the instructions provided by the manufacturer for installation of the equipment and the venting system shall include:

1. Detailed instructions for the installation of the venting system design or the venting system components; and
2. A complete parts list for the venting system design or venting system.

(d) **MANUFACTURER REQUIREMENTS - GAS EQUIPMENT VENTING SYSTEM NOT PROVIDED**. When the manufacturer of a Product Approved side wall horizontally vented gas fueled equipment does not provide the parts for venting the flue gases, but identifies "special venting systems", the following requirements shall be satisfied by the manufacturer:

1. The referenced "special venting system" instructions shall be included with the appliance or equipment installation instructions; and
2. The "special venting systems" shall be Product Approved by the Board, and the instructions for that system shall include a parts list and detailed installation instructions.

(e) **PLASTIC VENTING SYSTEMS.**

The only plastic piping which may be used for venting appliances shall be:

1. Allowed by the appliance manufacturer.
2. Listed to a national/international standard for plastic venting systems.
3. Product-accepted for that purpose by the board.

(f) **INSTALLATION INSTRUCTIONS.** A copy of all installation instructions for all Product Approved side wall horizontally vented gas fueled equipment, all venting instructions, all parts lists for venting instructions, and/or all venting design instructions shall remain with the appliance or equipment at the completion of the installation.

Vent Termination Requirements

Figure 41 The vent termination must be located to meet all requirements below (also applies to vertical vent terminations). The minimum distance from adjacent public walkways, adjacent buildings, openable windows and building in the National Fuel Gas Code, ANSI Z223.1/NFPA 54 and/or the Natural Gas and Propane Installation Code, CAN/CSA B149.1. The vent termination clearances below are for U.S.A., for Canadian vent termination clearances please refer to the requirements of CAN/CSA B149.1 Natural Gas and Propane Installation Code. Consideration should be given to avoid possible damage caused by vent plumes and condensate when choosing a venting configuration and location. Maintain a minimum clearance of 4 ft. (1.22m) horizontally from, and in no case above or below, unless a 4 ft. (1.22m) horizontal distance is maintained, from electrical meters, gas meters, regulators, and relief equipment.

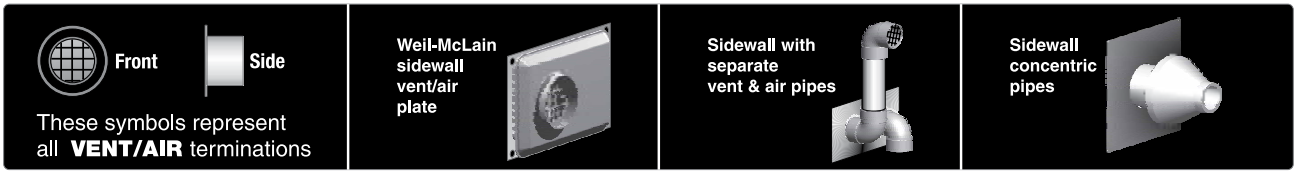

MINIMUM CLEARANCES

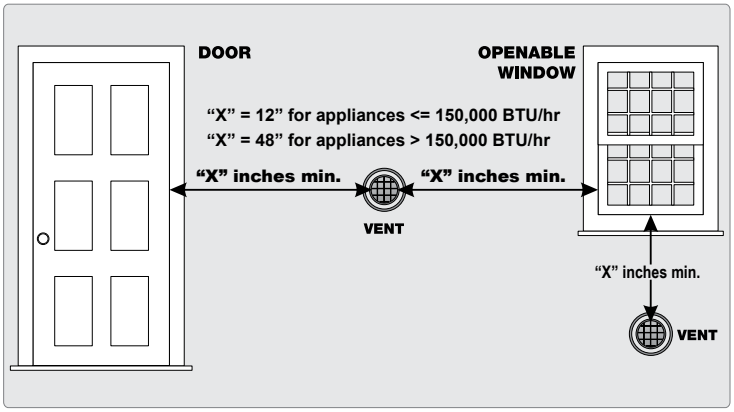

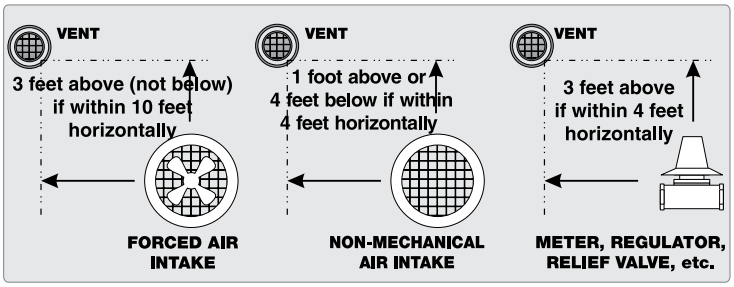

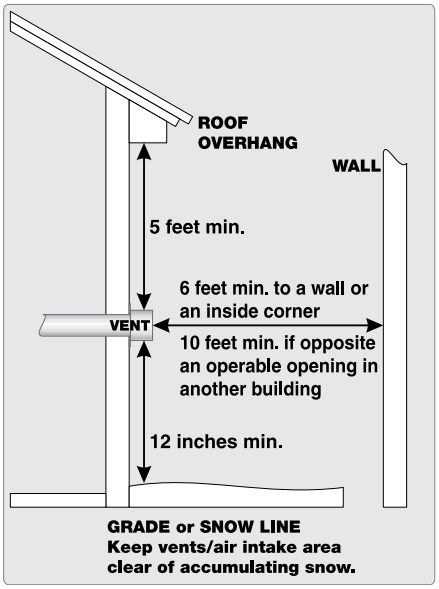

DO NOT TERMINATE:

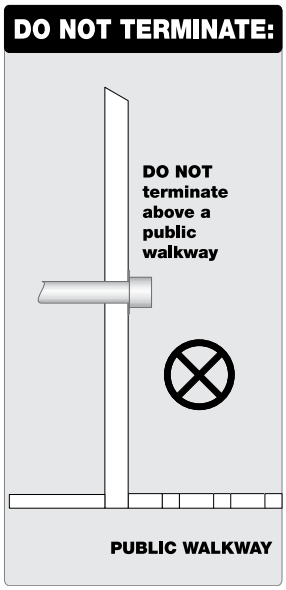

DO NOT TERMINATE:

Boiler Room Air Openings

Figure 42 Combustion and ventilation air openings for Direct Vent installations, also follow the National Fuel Gas Code, ANSI Z223.1/NFPA 54 - latest edition, and/or Natural Gas and Propane Installation Code, CAN/CSA B149.1 or applicable provisions of the local building codes.

WARNING

The **Evergreen® Pro** boiler CANNOT be in the same space with other appliances if clearances around the Evergreen® Pro are less than the recommended service clearances shown in **Figure 1, page 13**.

Air Openings The required air opening sizes below are FREE AREA, after reduction for louver obstruction. Note the exception below for large spaces.	Evergreen® Pro boiler WITH other appliances in room	Evergreen® Pro boiler WITHOUT other appliances in room
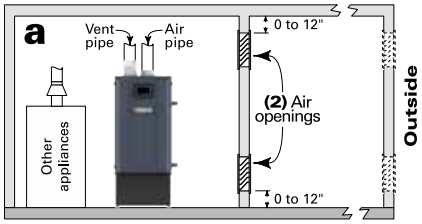	**TWO** openings, each at least: **1** square inch per 1,000 Btuh of all other appliances in the room (Unless specified otherwise by appliance manufacturer)	**NO** openings are required if the boiler installation provides at least the recommended service clearances shown in **Figure 1, page 13**. **If the space is smaller than Figure 1, page 13, provide openings ONLY as shown in Figure 2, page 13.** Each opening must have a free area no less than 1 square inch per 1,000 Btuh input of the boiler.
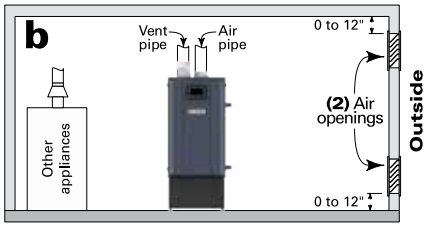	**TWO** openings, each at least: **1** square inch per 4,000 Btuh of all other appliances in the room - OR - **ONE** opening **, each at least: **1** square inch per 3,000 Btuh of all other appliances in the room (Unless specified otherwise by appliance manufacturer)	
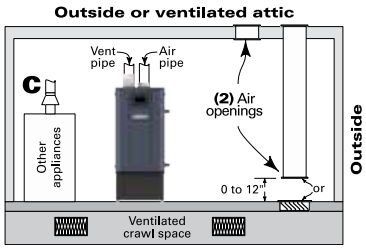	**TWO** openings, each at least: **1** square inch per 4,000 Btuh of all other appliances in the room - OR - **ONE** opening **, each at least: **1** square inch per 3,000 Btuh of all other appliances in the room (Unless specified otherwise by appliance manufacturer)	
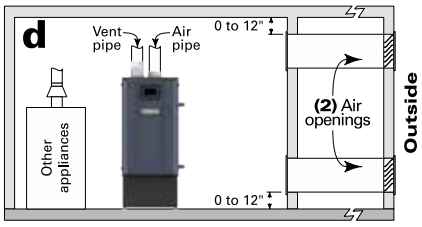	**TWO** openings, each at least: **1** square inch per 2,000 Btuh of all other appliances in the room - OR - **ONE** opening **, each at least: **1** square inch per 3,000 Btuh of all other appliances in the room (Unless specified otherwise by appliance manufacturer)	
**** NOTICE:** **Requirements for using the SINGLE air opening option.**	A single combustion air opening can be used for cases (b), (c) or (d) above (EVG with other appliances in room only), sized as listed, provided that: • The single opening must communicate directly to the outdoors or to a space that communicates directly with outdoors (NOT to an interior space). • The top of the opening must be within 12 inches of the ceiling. • The free area of the opening must be at least equal to the sum of the areas of all equipment vent connectors in the space.	
SPECIAL EXCEPTION FOR LARGE SPACES (EVG WITH other appliances in room only):	NO combustion air openings are needed if the boiler (and other appliances) are installed in a space with a volume NO LESS than 50 cubic feet per 1,000 Btuh of all appliances in the space. That is, total the input of all appliances in MBH (1,000's of Btuh), then multiply this total times 50. The building MUST NOT be of tight construction. **Example:** For a total input of 110 MBH (110,000 Btuh), the minimum volume would be 50 x 110 = 5,500 cubic feet.	

Vent and Air Piping and Boiler Connections

Follow Termination Instructions

1. Read and follow all instructions for the termination type used before proceeding with this page. Follow all instructions provided by vent pipe manufacturer.

WARNING

Use only materials from the manufacturers listed in **Figure 40, page 38**. Do not use Street Elbows directly in the Boilers Vent Adapter. A pipe nipple must be used and bottomed out in the Adapter's Vent Pipe Stop.

Installing Vent and Air Piping

Polypropylene

For polypropylene applications, see venting and air piping notes on **page 44**.

NOTICE

For locations with regulatory or code requirements to use only listed plastic or polymeric venting systems, the use of ULC S636 listed venting systems are allowed. See **Figure 39, page 37** and **Figure 40, page 38**.

AL29-4C S.S.

For AL29-4C vent pipe applications, See venting and air piping notes on **page 44**.

1. Work from the boiler to vent or air termination. Do not exceed the lengths given in the previous pages for either the air or vent piping.
2. See **Figure 43** for attaching vent (and air) pipes at the boiler. Air connections must be 3" (110/155) or 4" (220/299/300/399) PVC or CPVC only. Vent connections can be 3" or 4" PVC schedule 40, CPVC schedule 40, PVC-DWV schedule 40, AL29-4C stainless steel (from Simpson-Duravent only) and Polypropylene (from Simpson-Duravent & Centrotherm 3" venting only. 4" Centrotherm needs an adapter) piping without the need for extra adapters.
3. Cut pipe to required lengths.
4. Dry assemble entire vent or air piping to ensure proper fit before assembling any joint.
5. Maintain minimum clearance of 3/16 inch between vent pipe and any combustible wall or material.
6. Seal wall or floor penetration openings following local code requirements.
7. Assembling PVC or CPVC: (Polypropylene AL29-4C S.S. - follow pipe manufacturer's instructions for preparation and assembly)
   a. Deburr inside and outside of pipe ends.
   b. Chamfer outside of each pipe end to ensure even cement distribution when joining.
   c. Clean all pipe ends and fittings. Dry thoroughly.
   d. For each joint:
      - Handle fittings and pipes carefully to prevent contamination of surfaces.
      - Apply primer liberally to both joint surfaces - pipe end and fitting socket.
      - While primer is still damp, lightly apply approved cement to both surfaces in a uniform coating.
      - Apply a second coat to both surfaces. Avoid using too much cement on sockets to prevent cement buildup inside.
      - With cement still wet, insert pipe into fitting, twisting ¼ turn. Make sure pipe is fully inserted.
      - Wipe excess cement from joint. Check joint to be sure a smooth bead of cement shows around the entire joint.

Figure 43 Boiler vent and air connections

110/155

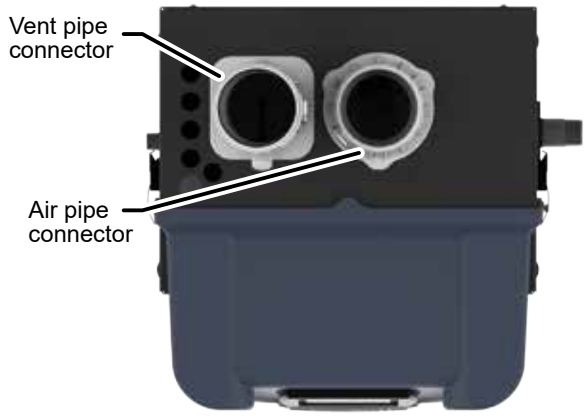

220/299/300/399

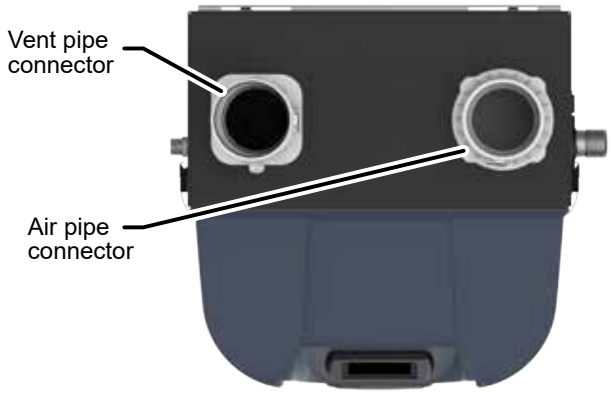

Vent and Air Piping and Boiler Connections (continued)

WARNING

ADAPTERS - For EVG 110-155: Use adapters if using other than 3 inch PVC/CPVC on inlet. For EVG 220-399: Use adapters if using other than 4 inch PVC/CPVC on inlet This is required for different materials.

1. Air connections must be 3" (110/155) or 4" (220/299/300/399) PVC or CPVC only. Vent connections can be 3" or 4" PVC schedule 40, CPVC schedule 40, PVC-DWV schedule 40, AL29-4C stainless steel (from Simpson-Duravent only) and Polypropylene (from Simpson-Duravent & Centrotherm 3" venting only. 4" Centrotherm needs an adapter) piping without the need for extra adapters.
2. Clean and deburr inside and outside of both ends of air and vent pipes. Chamfer boiler end of vent pipe for ease of insertion.

WARNING

The vent pipe end must be smooth and chamfered to prevent possible damage to sealing gasket in vent pipe adapter.

3. Inspect vent or air adapter (above) - verify no obstructions or foreign objects inside.
4. Loosen clamp screw.
5. Measure from end of pipe according to the chart below. Make a mark with felt-tip pen.

3"			4"		
PVC or CPVC	PP	Duravent SS	PVC or CPVC	PP	Duravent SS
2-5/16"	3-½"	4-3/16"	2-5/16"	3-5/16"	4-1/2"

6. Loosen adapter clamp screw.
7. Apply small amount of silicon grease to end of pipe to ease insertion.
8. Insert pipe into adapter.
9. Slide pipe down until the mark on the pipe is reached.

WARNING

Do not apply excessive force or bend the adapter or flue/air pipe when inserting. The adapter or seal could be damaged. If any portion of the vent or air system is damaged, it must be replaced.

10. Secure vent or air pipe by tightening the adapter clamp securely. Do not overtighten.
11. The seal is accomplished with the internal gasket. The clamp is only to hold the pipe in place.

WARNING

220 model only - When transitioning to 4 inch to 3 inch, use tapered reducer with 4" nipple (6" Length or greater). Do NOT use 4 inch to 3 inch bushing. Bushing will NOT seal in boiler adapter.

WARNING

USE SWEEP ELBOWS FOR ALL VENT AND AIR PIPING - DO NOT use short radius elbows for vent or air piping. Boiler performance could be affected.

DIRECT VENT - Sidewall with Separate Pipes

Allowable Vent/Air Pipe Materials & Lengths

WARNING

Use only the vent materials and kits listed in **Figure 40, page 38**. Provide pipe adapters if specified.

1. Locate the termination such that the total air piping and vent piping from the boiler to the termination will not exceed the maximum length given in **Figure 39, page 37**.

Polypropylene

For polypropylene applications, comply with any additional requirements in the vent system manufacturer's instructions. 3" PP Duravent & Centrotherm (110/155 only) & 4" Duravent (220-399 only) PP can be used for vent connection. Install a locking collar at every joint.

Note: A PVC to PP adapter at the Air Intake is required when using PP for air piping

Provide 4" transitions at the boiler connections if using 3" piping (220 only).

Refer to **page 166** for a list of compliant adapters.

4" to 3" (220 only) PP adapter must have smooth, straight section of pipe to insert in to the boiler vent and air connections and must fit and seal tightly. PP adapters with their own seal which would interfere with the internal seal of the boiler vent or air connections must not be used.

Additional vent and air transition pieces at termination may be required if different material and/or size is used for termination.

NOTICE

For locations with regulatory or code requirements to use only listed plastic or polymeric venting systems, the use of ULC S636 listed venting systems are allowed. See Figure 26, page 25 and Figure 27, page 26.

AL29-4C S.S.

For AL29-4C vent pipe applications, comply with any additional requirements in the vent system manufacturer's instructions.

3" Simpson Duravent (110/155 only), 4" Simpson Duravent (220-399 only) can be used at the vent connection. All other stainless steel manufacturer's venting will require a transition piece as per manufacturer's recommendation when transitioning from PVC to SS.

Note: A PVC to SS adapter at the Air Intake is required when using SS for air piping.

Additional vent and air transition pieces at termination may be required if different material and/or size is used for termination.

Provide 4" transitions at the boiler connections if using 3" piping (220 only).

Refer to **page 166** for a list of compliant adapters.

Determine Termination Location

1. The air and vent terminations must be installed as shown in **Figure 44** and **Figure 46, page 45**.
2. The terminations must comply with clearances and limitations shown in **Figure 41, page 40**.
3. Locate the terminations so they are not likely to be damaged by foreign objects, such as stones or balls, or subject to buildup of leaves or sediment.

WARNING

Do not exceed the maximum lengths of the outside vent piping shown in **Figure 44**. Excessive length exposed to the outside could cause freezing of condensate in the vent pipe, resulting in potential boiler shutdown. In extremely cold climates, install an insulated chase around the vent piping, particularly if using longer lengths. The chase must allow for inspection of the vent pipe, and insulation must be protected from water.

Figure 44 INSTALLATION SEQUENCE - Separate pipes sidewall

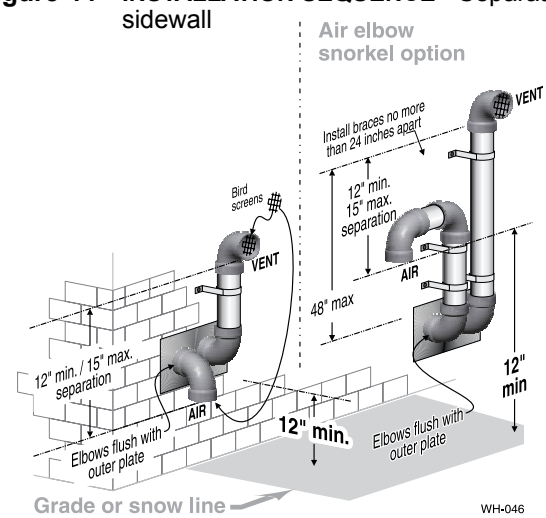

Step 1 Read and follow all instructions in this manual. **DO NOT proceed with vent/air installation until you have read page 19 through page 24.** Polypropylene AL29-4C S.S. See notices at left.

Step 2 Install the boiler in a location that allows proper routing of all vent and air piping to the selected sidewall location.

Step 3 Make sure the selected sidewall termination location complies with **Figure 41, page 40**. (Multiple boiler sidewall plates must also comply with **Figure 45, page 45**.)

Step 4 Use only the vent materials listed in **Figure 40, page 38**. Provide pipe adapters where required. Vent piping and air piping lengths must not exceed the values shown in **Figure 39, page 37**.

Step 5 Prepare the sidewall penetrations and secure the sidewall plates as instructed in this section. See **"Prepare Wall Penetrations" on page 45**. Polypropylene AL29-4C S.S. See notices at left.

Step 6 The air piping must terminate in a **down-turned elbow** as shown above. The vent piping must terminate in an **elbow pointed outward or away from the air inlet** as shown above. See illustration above.

Step 7 Install vent and air piping between the boiler and the sidewall openings. Slope horizontal piping downward toward the boiler at least 1/4 inch per foot. See page 38 for general guidelines. Polypropylene AL29-4C S.S. See notices at left.

Step 8 Install pipe supports every 5 feet on both the horizontal and vertical runs. Install a hanger support within 6 inches of any upturn in the piping, or per vent pipe manufacturer's instructions. Polypropylene AL29-4C S.S. See notices at left.

Step 9 Attach the vent termination exterior piping: Use either of the configurations shown above, as needed to ensure clearance above grade or snow line.

Step 10 Individual external vent and air pipes having a total length of up to 4 feet (each) do not require an insulated enclosure to be installed around the piping. The vent and air pipes must be secured with braces, and all clearances and lengths must be maintained. Space braces no further than 24 inches apart.

Step 11 Individual external vent and air pipes having a total length greater than 4 feet (each) must have an insulated enclosure installed around the vent and air pipes to reduce the risk of condensate freezing inside of the exposed piping. The vent and air terminations must exit through the enclosure as shown in the illustration above, maintaining all required clearances.

WARNING

USE SWEEP ELBOWS FOR ALL VENT AND AIR PIPING - DO NOT use short radius elbows for vent or air piping. Boiler performance could be affected.

DIRECT VENT - Sidewall with Separate Pipes (continued)

Polypropylene AL29-4C S.S. See notices on previous page.

Multiple Vent/Air Terminations

1. When terminating multiple boilers, terminate each vent/air connection as described in this manual.

WARNING

All vent pipes and air inlets must terminate at the same height to avoid possibility of severe personal injury, death or substantial property damage.

2. Place wall penetrations to obtain minimum clearances shown in **Figure 45, page 45** for U. S. installations. For Canadian installations, provide clearances required by CSA B149.1 or B149.2 Installation Code and a ULC S636 compliant vent kit.
3. The air inlet of a boiler is part of a direct vent connection. It is not classified as a forced air intake with regard to spacing from adjacent boiler vents.

Prepare Wall Penetrations

1. Air pipe penetration:
   a. Cut a hole for the air pipe. Size the air pipe hole as close as desired to the air pipe outside diameter.
2. Vent pipe penetration:
   a. Cut a hole for the vent pipe. For either combustible or noncombustible construction, size the vent pipe hole at least 0.4" larger than the vent pipe diameter.
   b. Insert a corrosion resistant metal thimble in the vent pipe hole as shown in **Figure 46**.
3. Use the provided paper template for correct location of hole centers.
4. Use of a sidewall termination plate is REQUIRED.
   a. Kits for several vent sizes are available from Weil-McLain. See **"VENT/AIR PARTS AND KITS (PVC or STAINLESS STEEL)" on page 166**.
   b. Plate may be field fabricated from corrosion resistant material of sufficient strength. Plate must allow venting to maintain minimum clearance to combustibles.

WARNING

Ensure that the plate material is strong enough to prevent the termination from being pushed inward if struck or pushed from the outside.

5. Follow all local codes for isolation of vent pipe when passing through floors or walls.
6. Seal exterior openings thoroughly with exterior caulk.

Termination and Fittings

1. Prepare the vent termination elbow and the air termination elbow by inserting bird screens. (See **Figure 44, page 44**.) Bird screens must be purchased separately. See the parts list at the end of this manual for part numbers.
2. Secure the elbows so they will butt against the sidewall termination plate.
3. When completed, the air termination coupling must be oriented at least 12 inches below the vent termination and at least 12 inches above grade or snow line as shown in **Figure 44, page 44**.
4. You can orient the vent termination elbow either directly outward or 90 degrees away from the air inlet elbow as shown in **Figure 44, page 44**.
5. Maintain the required dimensions of the finished termination piping as shown in **Figure 44, page 44**.
6. For multiple boiler terminations, see **Figure 45**.
7. Do not extend exposed vent pipe outside of building more than shown in this document. Condensate could freeze and block vent pipe.

NOTICE

If extending the vent and air pipes out from the wall, install a coupling on each pipe. Mount the piping with the coupling flush with the outer plate.

Figure 45 Multiple separate pipes sidewall terminations - maintain vertical spacing between vent and air fittings shown in **Figure 44, page 44**

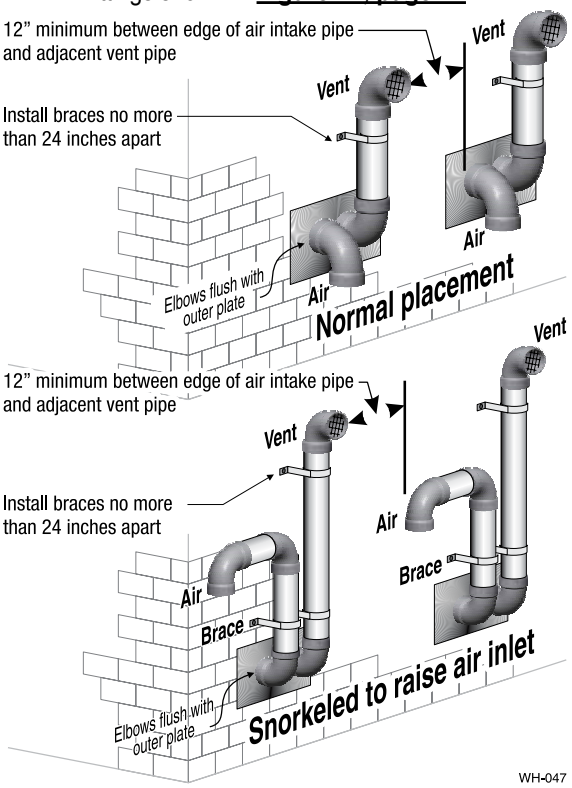

Figure 46 Sidewall termination assembly - using separate pipes

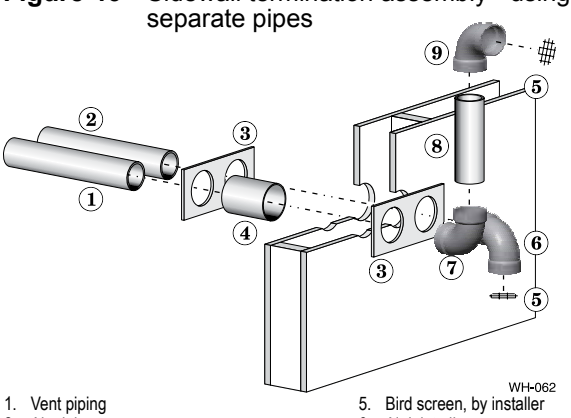

1. Vent piping
2. Air piping
3. Sidewall termination plates: for 3" PVC, use plates supplied with boiler in W-M vent/air plate kit; for 3" AL29-4C, purchase optional sidewall separate pipes plate kit
4. Corrosion resistant thimbles, by installer
5. Bird screen, by installer
6. Air inlet elbow
7. Elbow
8. Nipple
9. Elbow (vent termination)

DIRECT VENT - Sidewall Concentric

Allowable Vent/Air Pipe Materials & Lengths

1. The concentric termination kit must be purchased separately.

WARNING

Use only the vent materials and kits listed in **Figure 40, page 38**, **Figure 124, page 166** & **Figure 125, page 167**. Provide pipe adapters if specified.

2. Locate the termination such that the total air piping and vent piping from the boiler to the termination will not exceed the maximum length given in **Figure 39, page 37**.
3. This termination requires a 45-degree elbow that is not supplied with the termination kit. The maximum vent/air pipe lengths include allowance for this elbow.

Polypropylene

For polypropylene applications, see venting and air piping notes on **page 44**.

AL29-4C S.S.

For AL29-4C vent pipe applications, See venting and air piping notes on **page 44**.

Determine Termination Location

1. The concentric termination kit must be installed as shown in **Figure 49, page 47**.
2. The termination must comply with clearances and limitations shown in **Figure 41, page 40**.
3. Locate the termination so it is not likely to be damaged by foreign objects, such as stones or balls, or subject to buildup of leaves or sediment.

Multiple Vent/Air Terminations

1. When terminating multiple boilers, install each concentric termination as described in this manual.

WARNING

All vent pipes and air inlets must terminate at the same height to avoid possibility of severe personal injury, death or substantial property damage.

2. Place wall penetrations to obtain minimum clearance as shown in **Figure 48, page 47** for U. S. installations. For Canadian installations, provide clearances required by CSA B149.1 or B149.2 Installation Code and a ULC S636 compliant vent kit.
3. The air inlet of a boiler is part of a direct vent connection. It is not classified as a forced air intake with regard to spacing from adjacent boiler vents.

Figure 47 **INSTALLATION SEQUENCE** - Concentric horizontal

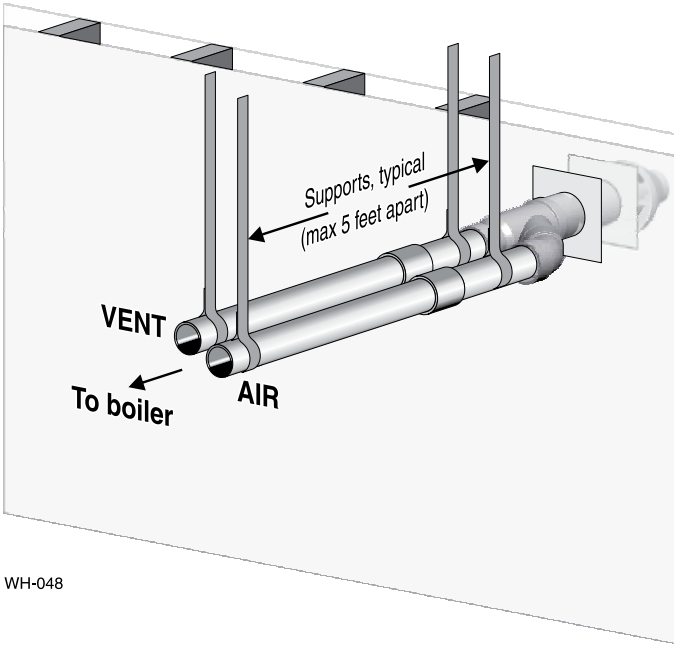

Step 1 Read and follow all instructions in this manual. **DO NOT proceed with vent/air installation until you have read page 35 through page 41.** Polypropylene AL29-4C S.S. See notices at left.

Step 2 Install the boiler in a location that allows proper routing of all vent and air piping to the selected sidewall location.

Step 3 Make sure the selected sidewall termination location complies with **Figure 41, page 40**. (Multiple boiler concentric terminations must also comply with **Figure 48, page 47**.)

Step 4 Use only the vent materials listed in **Figure 40, page 38**. Provide pipe adapters where required.

Step 5 Vent piping and air piping lengths must not exceed the values shown in **Figure 39, page 37**.

Step 6 The concentric termination must be assembled and installed before piping from the boiler to the termination.

Step 7 Prepare the sidewall penetration - assemble the concentric termination kit and secure the cover plates as instructed in this section. Provide the supports indicated and mount the termination assembly. See **"Install Termination - Concentric Pipes" on page 47**. Polypropylene AL29-4C S.S. See notices at left.

Step 8 Install vent and air piping between the boiler and the concentric vent/air termination. Slope horizontal piping downward toward the boiler at least 1/4 inch per foot. See **page 42** for general guidelines.

Step 9 Install pipe supports every 5 feet on both the horizontal and vertical runs. Polypropylene AL29-4C S.S. See notices at left.

Step 10 Install a hanger support within 6 inches of any upturn in the piping. Polypropylene AL29-4C S.S. See notices at left.

WARNING

USE SWEEP ELBOWS FOR ALL VENT AND AIR PIPING - DO NOT use short radius elbows for vent or air piping. Boiler performance could be affected.

Direct Vent - Sidewall Concentric (continued)

Polypropylene AL29-4C S.S. See notices on previous page.

Install Termination - Concentric Pipes

1. Assemble the vent termination as described for concentric terminations, on **page 56**.

WARNING

If necessary, you can shorten the lengths of the inner and outer pipes for a shorter finished assembly. But you must ensure the pipes butt correctly at both ends. Failure to properly assemble the concentric termination can result in flue gas recirculation, causing possible severe personal injury or death.

2. Wall penetration:
   a. Preferably, use a thimble with a 5½-inch hole (4" Concentric Kit) or a 4½-inch hole (3" Concentric Kit). If not using a thimble, carefully use a hole saw to cut a hole not larger than 5¾ or 4¾ inches in diameter through the wall. The finished hole must provide a solid stop for the rain cap ribs, as shown in the inset to **Figure 49**.

WARNING

Ensure that the wall material is strong enough to prevent the rain cap from being pushed inward if struck or pushed from the outside.

3. Secure the termination in place so the rain cap will butt against the outside wall or outer thimble plate as shown in **Figure 49**.
4. Before beginning vent and air piping from the boiler to the concentric termination, mount and secure the concentric termination as shown in **Figure 49**.

WARNING

- The vent and air piping must be securely supported, and must not rest its weight on the boiler fittings. Failure to properly support the vent and air piping could result in vent piping damage, resulting in possible severe personal injury, death or substantial property damage.

  The supports/bracing used must support the termination assembly to prevent slippage or movement. See instructions provided with concentric kit for details.

  The clamps used on the outside of the termination pipe must not cut into the pipe or contain sharp edges that could cause a crack to form.
- When inserting the partially-assembled termination kit through the wall penetration, wrap plastic or other protection over the end of the exposed assembly to prevent debris from entering the pipes. If the air passages become blocked, the boiler will not operate. Once the rain cap has been cemented to the assembly, there is no way to correct the problem. The assembly would have to be replaced if it were cut to be removed and cleaned. Altering the assembly in any way could result in severe personal injury or death due to toxic flue product emissions.
- If using AL29-4C stainless vent pipe, use the vent pipe manufacturer's PVC adapter if connecting to a PVC concentric vent attachment.

5. After the assembly has been positioned in the opening and all supports have been attached, install a bird screen (purchased separately if not included with the kit) and rain cap as follows:
   a. Place the bird screen on the end of the inner pipe as in **Figure 62, page 56**, or per concentric kit instructions for polypropylene kits.
   b. Cement the rain cap in place as shown.

Figure 48 Termination location - concentric termination - multiple boilers - clearance from vent of one to air intake of the next

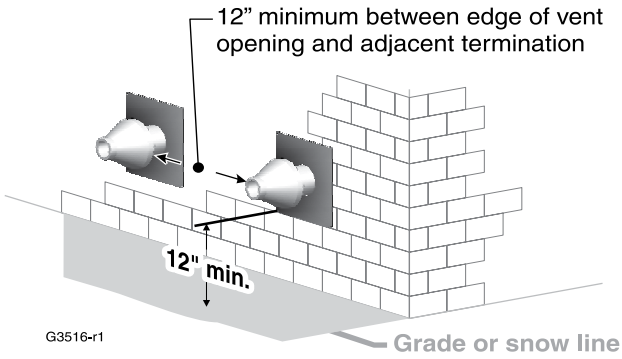

Figure 49 Installing and supporting the concentric sidewall vent assembly

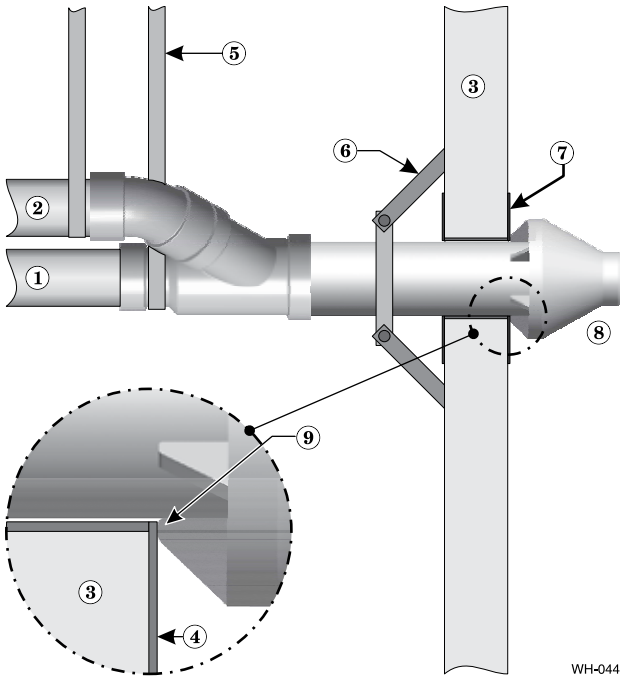

LEGEND

1. Vent pipe
2. Air pipe
3. Wall
4. Outer thimble plate
5. Supports every 5 feet or per vent pipe mfg's instructions
6. Wall brace, by installer, (or see vent pipe mfg's instructions)
7. Thimble, by installer
8. Rain cap
9. Rain cap ribs must butt against outer thimble plate or wall opening

DIRECT VENT - Sidewall with W-M Vent/Air Plate

Allowable Vent/Air Pipe Materials & Lengths

WARNING

Use only the vent materials and kits listed in **Figure 40, page 38** **Figure 124, page 166** & **Figure 125, page 167**. Provide pipe adapters if specified.

1. Locate the termination such that the total air piping and vent piping from the boiler to the termination will not exceed the maximum length given in **Figure 39, page 37**.

Polypropylene

For polypropylene applications, see venting and air piping notes on **page 44**.

AL29-4C S.S.

For AL29-4C vent pipe applications, See venting and air piping notes on **page 44**.

Determine Termination Location

1. The vent/air cap must be installed as shown in **Figure 53, page 49**.
2. The termination must comply with clearances and limitations shown in **Figure 41, page 40**.
3. Locate the termination so it is not likely to be damaged by foreign objects, such as stones or balls, or subject to buildup of leaves or sediment.

Multiple Vent/Air Terminations or Termination Adjacent to Other Appliance Terminations

1. When terminating multiple boilers, terminate each vent/air connection as described in this manual.

WARNING

All vent pipes and air inlets must terminate at the same height to avoid possibility of severe personal injury, death or substantial property damage.

2. Place wall penetrations to obtain minimum clearance as shown in for U. S. installations. For Canadian installations, provide clearances required by CSA B149.1 or B149.2 Installation Code and a ULC S636 compliant vent kit.
3. The air inlet of a boiler is part of a direct vent connection. It is not classified as a forced air intake with regard to spacing from adjacent boiler vents.

WARNING

For terminations of other appliances, provide at least the clearance shown. The installation must also comply with the manual for the other appliances.

Figure 50 INSTALLATION - W-M sidewall vent/air plate

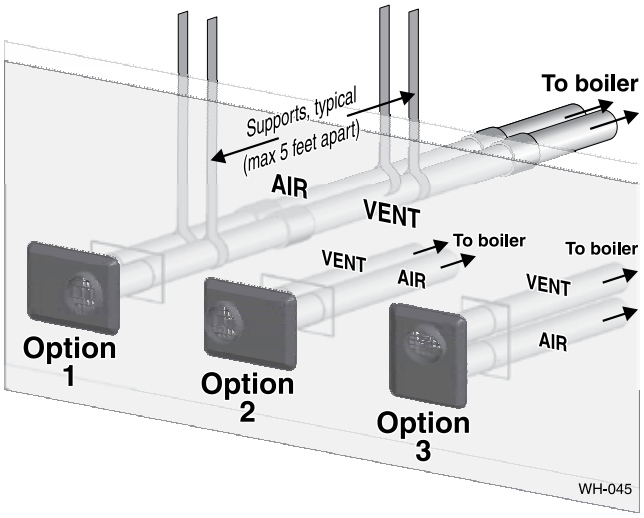

Vent/air pipes and vent/air can be oriented as option 1, 2, or 3. DO NOT mount with plate vertical and vent outlet down.

Step 1 Read and follow all instructions in this manual. **DO NOT proceed with vent/air installation until you have read page 35 through page 41.** Polypropylene AL29-4C S.S. See notices at left.

Step 2 Install the boiler in a location that allows proper routing of all vent and air piping to the selected sidewall location.

Step 3 Make sure the selected sidewall termination location complies with **Figure 41, page 40**. (Multiple boiler sidewall plates must also comply with **Figure 51, page 49**.)

Step 4 Use only the vent materials listed in **Figure 40, page 38**. Provide pipe adapters where required.

Step 5 Vent piping and air piping lengths must not exceed the values shown in **Figure 39, page 37**.

Step 6 Prepare the sidewall penetrations and secure the sidewall plates as instructed in this section. See **"Install Weil-McLain Vent/Air Cap" on page 49**.

Step 7 The Weil-McLain plate termination must be installed before piping from the boiler to the termination.

Step 8 Install vent and air piping between the boiler and the vent/air termination plate. Slope horizontal piping downward toward the boiler at least 1/4 inch per foot. See **"Installing Vent and Air Piping" on page 42** for general guidelines.

Step 9 Install pipe supports every 5 feet on both the horizontal and vertical runs, or per vent pipe manufacturer's instructions. Polypropylene AL29-4C S.S. See notices at left.

Step 10 Install a hanger support within 6 inches of any upturn in the piping, or per vent pipe manufacturer's instructions. Polypropylene AL29-4C S.S. See notices at left.

WARNING

USE SWEEP ELBOWS FOR ALL VENT AND AIR PIPING - DO NOT use short radius elbows for vent or air piping. Boiler performance could be affected.

DIRECT VENT - Sidewall with W-M Vent/Air Plate
(continued)

Install Weil-McLain Vent/Air Cap

WARNING

ADAPTERS - Use adapters if using other than 3" or 4" (depending on kit size) PVC or CPVC. This is required for different materials polypropylene or AL29-4C stainless steel.

NOTICE

The inside and outside cover plates are stamped to identify the exhaust (vent) and intake (air) openings. Make sure to orient the plates correctly.

1. Locate termination opening and avoid obstructions:
   a. Use the template supplied with the termination kit.
   b. Locate the template on the outside building surface where the penetration is to be made.
   c. Make sure there will be no obstructions that might prevent proper placement of the termination.
   d. Use the template to mark the locations for the four mounting holes, flue pipe and air pipe. Level the template with a level.

WARNING

For the Weil-McLain plate, the template must be level to ensure the flue and air pipe will be side-to-side, as shown in **Figure 52**. Failure to comply could result in severe personal injury, death or substantial property damage.

   e. Cut holes in the wall as shown in **Figure 52**, using the location marks made with the template. For best results, use a small-diameter, long drill bit to drill centering holes for the flue and air pipe openings. Then drill the large openings from both the inside and outside.
   f. The flue pipe and air pipe may be run through a rectangular cutout (as marked on the template) in lieu of two separate holes if desired.
2. Drill holes for the screws or plastic anchors to secure the outside plate. Install the outside plate and mount the termination on the plate (temporarily).
   a. Cut the flue pipe so the extension through the wall will cause the vent pipe to fully extend into the termination socket.
   b. Cut the air pipe so the extension through the wall will butt the air pipe against the stops inside the termination.
   c. Temporarily slide the flue and air pipes through the opening(s). Slide the inside wall plate over the two pipes and into position on the inside wall.
   d. Position the inside plate so the flue pipe and air pipe slope downward slightly toward the boiler (1/4" per foot).
   e. Mark the four (4) mounting holes for the plate.
   f. Remove the vent and air pipe, drill the four mounting holes, and mount the inside plate.
3. Test fit the vent/air termination on the vent pipe. Make sure the vent pipe fully penetrates the termination socket and the air pipe butts against the interior stops.
4. Apply silicon RTV sealant to the interior of the vent termination and slide onto vent pipe. Rotate slightly to spread the silicon to ensure a tight seal around the vent pipe.
5. Secure the termination in place using the four (4) #10 x ½" sheet metal screws and lock washers (see **Figure 53**).

NOTICE

Vent/air pipes and W-M vent/air plate can be oriented in any of the configurations shown in **Figure 50, page 48**.

Figure 51 Adjacent terminations - OUTSIDE VIEW - clearance from air inlet to exhaust from another appliance

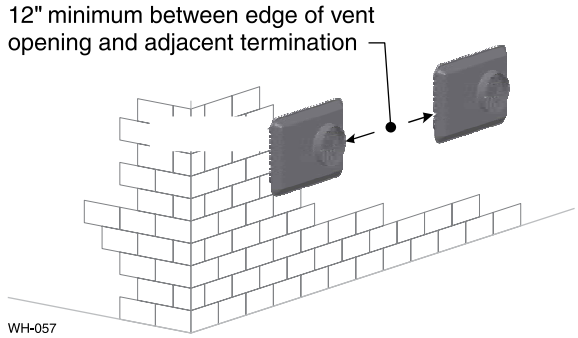

Figure 52 Hole preparation in wall - INSIDE VIEW (use template provided)

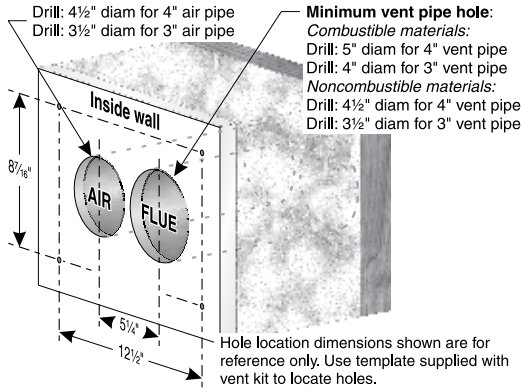

1. Inside wall
2. Drill: 3½" diameter for 3" air pipe; locate using template provided
3. For combustible materials, drill: 4" diameter for 3" vent pipe For noncombustible materials, drill 3½" diameter for 3" vent pipe Locate opening using template provided
4. Drill mounting screw holes using template provided

Figure 53 Termination assembly - INSIDE VIEW Weil-McLain vent/air cap and plates

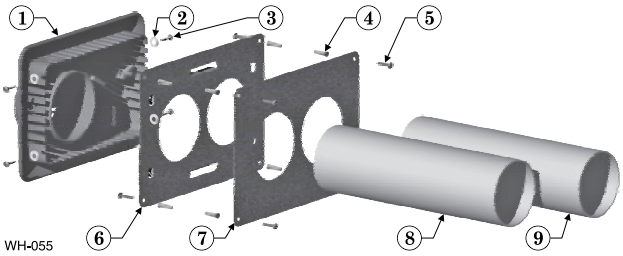

1. Vent termination (3")
2. Lock washer, #10 (4)
3. Sheet metal screw, #10 x ½" (4)
4. Plastic wall anchor (8)
5. Sheet metal screw, #10 x 1¼" (8)
6. Outer mounting plate
7. Inner mounting plate
8. Vent pipe (butt to screen in termination)
9. Air pipe (butt to stops in termination)

DIRECT VENT - Vertical with Separate Pipes

Allowable Vent/Air Pipe Materials & Lengths

WARNING

Use only the vent materials and kits listed in **Figure 40, page 38**. Provide pipe adapters if specified.

1. Locate the terminations such that the total air piping and vent piping from the boiler to the termination will not exceed the maximum length given in **Figure 39, page 37**.

Polypropylene

For polypropylene applications, see venting and air piping notes on **page 44**.

AL29-4C S.S.

For AL29-4C vent pipe applications, See venting and air piping notes on **page 44**.

Determine Termination Location

1. The air and vent terminations must be installed as shown in **Figure 54**.
2. The terminations must comply with clearances and limitations shown in **Figure 41, page 40**.
3. Locate the terminations so they are not likely to be damaged by foreign objects, such as stones or balls, or subject to buildup of leaves or sediment.

Multiple Vent/Air Terminations Figure 55, page 51

1. When terminating multiple boilers, terminate each vent/air connection as described in this manual.

WARNING

Terminate all vent pipes at the same height and all air pipes at the same height to avoid possibility of severe personal injury, death or substantial property damage.

2. Place roof penetrations to obtain minimum clearance of 12 inches between edge of air intake elbow and adjacent vent pipe of another boiler for U. S. installations (see **Figure 55, page 51**). For Canadian installations, provide clearances required by CSA B149.1 or B149.2 Installation Code and a ULC S636 compliant vent kit.
3. The air inlet of a boiler is part of a direct vent connection. It is not classified as a forced air intake with regard to spacing from adjacent boiler vents.

Figure 54 Separate pipes vertical termination

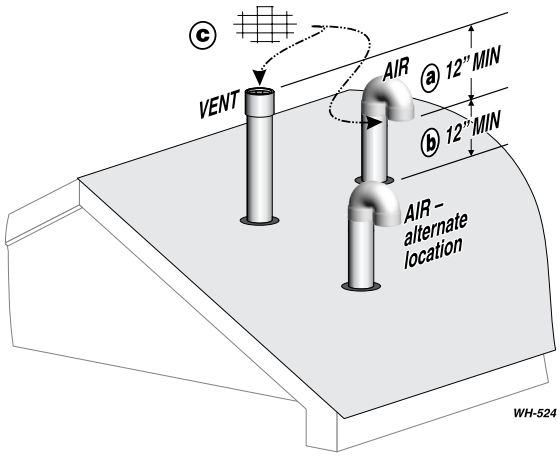

Terminate vent and air pipes such that:

a. **AIR INTAKE** IS AT LEAST 12 inches below vent outlet
b. **AIR INTAKE** IS AT LEAST 12 inches above roof or snow line
c. **Vent and air terminations are fitted with bird screens**

Step 1 Read and follow all instructions in this manual. **DO NOT proceed with vent/air installation until you have read page 35 through page 41.** Polypropylene AL29-4C S.S. See notices at left.

Step 2 Install the boiler in a location that allows proper routing of all vent and air piping to the selected sidewall location.

Step 3 Make sure the selected vertical termination location complies with **Figure 41, page 40**. (Multiple boiler terminations must also comply with **Figure 55, page 51**.)

Step 4 Use only the vent materials listed in **Figure 40, page 38**. Provide pipe adapters where required. Vent piping and air piping lengths must not exceed the values shown in **Figure 39, page 37**.

Step 5 Prepare the vertical penetrations and secure penetration components as instructed in this section. See **"Prepare Roof Penetrations" on page 51** and **"Termination and Fittings" on page 51**.

Step 6 The air piping must terminate in a 180-degree return bend or **down-turned elbow** as shown above. The vent piping must terminate in a **coupling pointed upward** as shown above.

Step 7 Install vent and air piping between the boiler and the vertical terminations. Slope horizontal piping downward toward the boiler at least 1/4 inch per foot. Install pipe supports every 5 feet on both the horizontal and vertical runs. Install a hanger support within 6 inches of any upturn in the piping. See **page 42** for general guidelines. Also comply with vent pipe manufacturer's instructions. Polypropylene AL29-4C S.S. See notices at left.

Step 8 Insert the vent and air piping through the vertical penetrations and secure the termination fittings.

Step 9 Maintain clearances shown above. Vent and air terminations must be fitted with a bird screen as shown.

WARNING

USE SWEEP ELBOWS FOR ALL VENT AND AIR PIPING
- DO NOT use short radius elbows for vent or air piping. Boiler performance could be affected.

DIRECT VENT - Vertical with Separate Pipes (continued)

Polypropylene AL29-4C S.S. See notices on previous page.

Prepare Roof Penetrations

1. Air pipe penetration:
   a. Cut a hole for the air pipe. Size the air pipe hole as close as desired to the air pipe outside diameter.
2. Vent pipe penetration:
   a. Cut a hole for the vent pipe. For either combustible or noncombustible construction, size the vent pipe hole at least 0.4" larger than the vent pipe diameter.
   b. Insert a corrosion resistant metal thimble in the vent pipe hole.
3. Space the air and vent holes no closer than the minimum spacings shown in **Figure 55**.
4. Follow all local codes and vent pipe manufacturer's instructions for isolation of vent pipe when passing through floors, ceilings and roofs.
5. Provide flashing and sealing boots sized for the vent pipe and air pipe. Follow all vent pipe manufacturer's instructions.

Termination and Fittings

1. Prepare the vent termination coupling and the air termination elbow (**Figure 54, page 50**) by inserting bird screens. Bird screens must be purchased separately. See the parts list at the end of this manual for part numbers.
2. The air piping must terminate in a down-turned 180-degree return bend as shown in **Figure 54, page 50**. The edge of the air inlet elbow must be at least 12 inches above the roof or snow line.
3. The vent piping must terminate in an up-turned coupling as shown in **Figure 54, page 50**. The top of the coupling must be at least 12 inches above the air intake in order to avoid recirculation of flue products into the combustion air stream.
4. Maintain the required dimensions of the finished termination piping as shown in **Figure 54, page 50**.
5. Do not extend exposed vent pipe outside of building more than shown in this document. Condensate could freeze and block vent pipe.

Figure 55 Terminations for multiple boilers

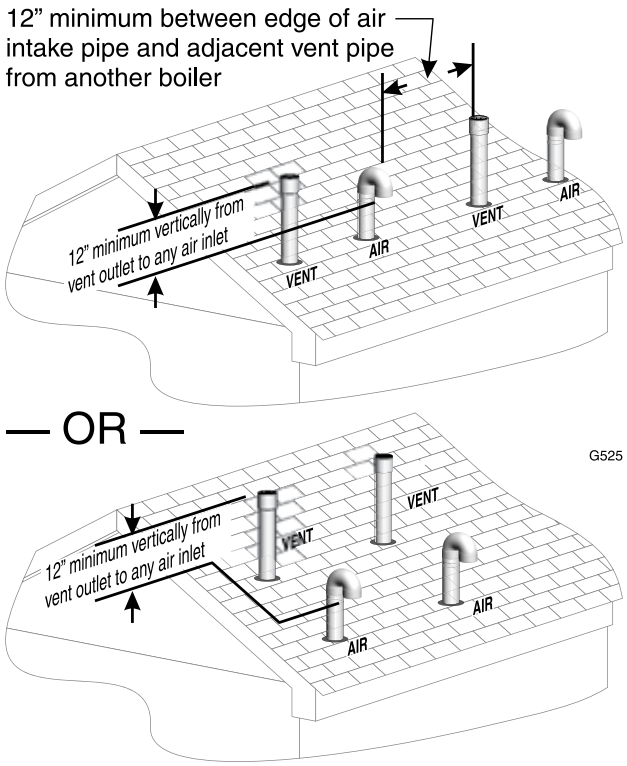

2

DIRECT VENT - Vertical Concentric

Allowable Vent/Air Pipe Materials & Lengths

1. The concentric termination kit must be purchased separately.

WARNING

Use only the vent materials and kits listed in **Figure 40, page 38** **Figure 124, page 166** & **Figure 125, page 167**. Provide pipe adapters if specified.

2. Locate the termination such that the total air piping and vent piping from the boiler to the termination will not exceed the maximum length given in **Figure 39, page 37**.
3. This termination requires a 45-degree elbow that is not supplied with the termination kit. The maximum vent/air pipe lengths include allowance for this elbow.

Polypropylene

For polypropylene applications, see venting and air piping notes on **page 44**.

AL29-4C S.S.

For AL29-4C vent pipe applications, See venting and air piping notes on **page 44**.

Determine Termination Location

Locate the concentric vent/air termination using the following guidelines:

1. The concentric vent/air assembly must terminate as shown in **Figure 58, page 53**.
2. The termination must comply with the clearances and limitations shown in **Figure 41, page 40**.
3. Locate the termination so it is not likely to be damaged by foreign objects, such as stones or balls, or subject to buildup of leaves or sediment.
4. For Canadian installations, follow requirements of CSA B149.1 or B149.2 Installation Code and a ULC S636 compliant vent kit.

Multiple Vent/Air Terminations

1. When terminating multiple boilers, install the concentric vent/air termination assemblies as described in this manual.

WARNING

All vent outlets must terminate at the same height to avoid possibility of severe personal injury, death or substantial property damage.

2. Place roof penetrations to obtain minimum clearance of 12 inches between the edges of adjacent vent pipes of other boilers for U. S. installations (see **Figure 57, page 53**).
3. For Canadian installations, provide clearances required by CSA B149.1 or B149.2 Installation Code and a ULC S636 compliant vent kit.
4. The air inlet of a boiler is part of a direct vent connection. It is not classified as a forced air intake with regard to spacing from adjacent boiler vents.

Figure 56 **INSTALLATION SEQUENCE** - Concentric vertical

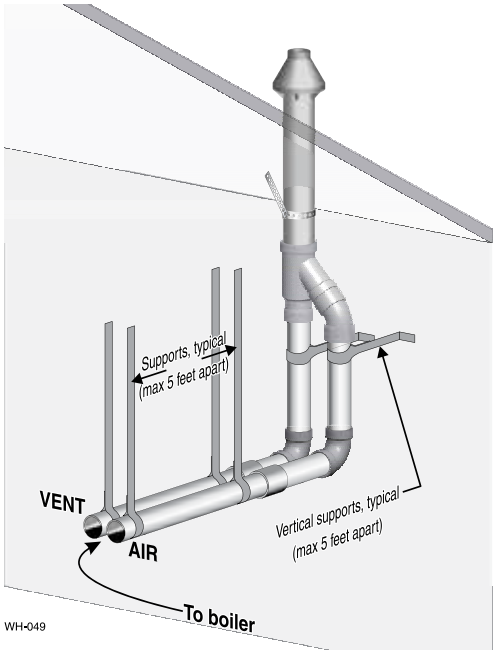

Step 1 Read and follow all instructions in this manual. **DO NOT proceed with vent/air installation until you have read page 35 through page 41.** Polypropylene AL29-4C S.S. See notices at left.

Step 2 Install the boiler in a location that allows proper routing of all vent and air piping to the selected sidewall location.

Step 3 Make sure the selected vertical termination location complies with **Figure 41, page 40**. (Multiple boiler concentric terminations must also comply with **Figure 57, page 53**.)

Step 4 Use only the vent materials listed in **Figure 40, page 38**. Provide pipe adapters where required.

Step 5 Vent piping and air piping lengths must not exceed the values shown in **Figure 39, page 37**.

Step 6 The concentric termination must be assembled and installed before piping from the boiler to the termination.

Step 7 Prepare the vertical penetration(s) - assemble the concentric termination kit and secure the penetration components as instructed in this section. Provide the supports indicated and mount the termination assembly. See **"Prepare Roof Penetrations" on page 53** and **"Mount Concentric Termination" on page 53** Polypropylene AL29-4C S.S. See notices at left.

Step 8 Install vent and air piping between the boiler and the concentric vent/air termination. Slope horizontal piping downward toward the boiler at least 1/4 inch per foot. See **page 42** for general guidelines.

Step 9 Install pipe supports every 5 feet on both the horizontal and vertical runs. Polypropylene AL29-4C S.S. See notices at left.

Step 10 Install a hanger support within 6 inches of any upturn in the piping. Polypropylene AL29-4C S.S. See notices at left.

WARNING

USE SWEEP ELBOWS FOR ALL VENT AND AIR PIPING - DO NOT use short radius elbows for vent or air piping. Boiler performance could be affected.

DIRECT VENT - Vertical Concentric (continued)

Polypropylene AL29-4C S.S. See notices on previous page.

Prepare Roof Penetrations

1. Roof penetration hole:
   a. Cut a clearance hole to clear the termination outside diameter as prescribed in the kit instructions.
   b. Insert a corrosion resistant metal thimble in the vent pipe hole.
2. Follow all local codes for isolation of vent pipe when passing through floors, ceilings and roofs.
3. Provide flashing and sealing boots sized for the concentric termination outside diameter.

Mount Concentric Termination

1. Assemble the vent termination as described for concentric terminations, on **page 56**.
2. Mount the termination as shown in **Figure 58**.
3. Support the concentric vent/air termination at the roof penetration as shown in **Figure 58** or per concentric kit instructions.
   - The supports/bracing used must support the termination assembly to prevent vertical slippage or sideways movement.
   - The clamps used on the outside of the termination pipe must not cut into the pipe or contain sharp edges that could cause a crack to form.

WARNING

- The vent and air piping must be securely supported, and must not rest its weight on the boiler fittings. DO NOT drill or screw into either the vent pipe or air pipe. Failure to properly support the vent and air piping could result in vent piping damage, resulting in possible severe personal injury, death or substantial property damage.
- When inserting the partially-assembled termination kit through the roof penetration, wrap plastic or other protection over the end of the exposed assembly to prevent debris from entering the pipes. If the air passages become blocked, the boiler will not operate. Once the rain cap has been cemented to the assembly, there is no way to correct the problem. The assembly would have to be replaced if it were cut to be removed and cleaned. Altering the assembly in any way could result in severe personal injury or death due to toxic flue product emissions.
- If using AL29-4C stainless vent pipe, use the vent pipe manufacturer's PVC adapter if connecting to a PVC concentric vent attachment.
- Do not connect any other appliance to the vent pipe or multiple boilers to a common vent pipe.

4. After the assembly has been positioned in the roof opening and all supports have been attached, install a bird screen (purchased separately if not included with the kit) and rain cap as follows:
   a. Place the bird screen on the end of the inner pipe as in **Figure 62, page 56**, or per kit instructions for polypropylene kits.
   b. Cement the rain cap in place.

Figure 57 Vertical termination - 3" or 4" PVC concentric - single or multiple boilers

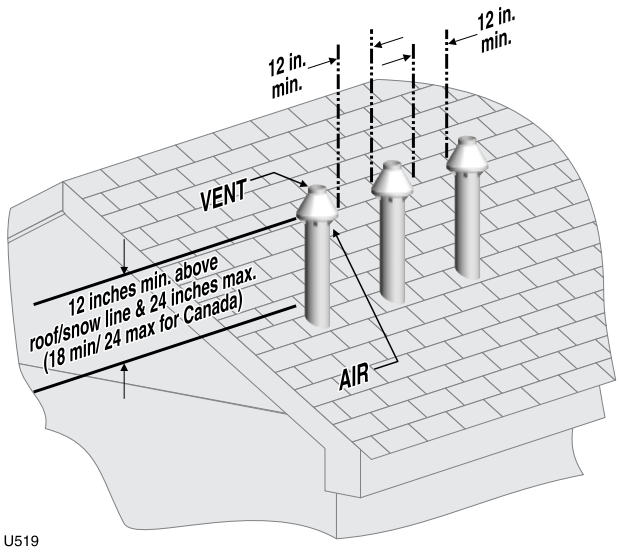

Figure 58 3" or 4" PVC concentric termination supports

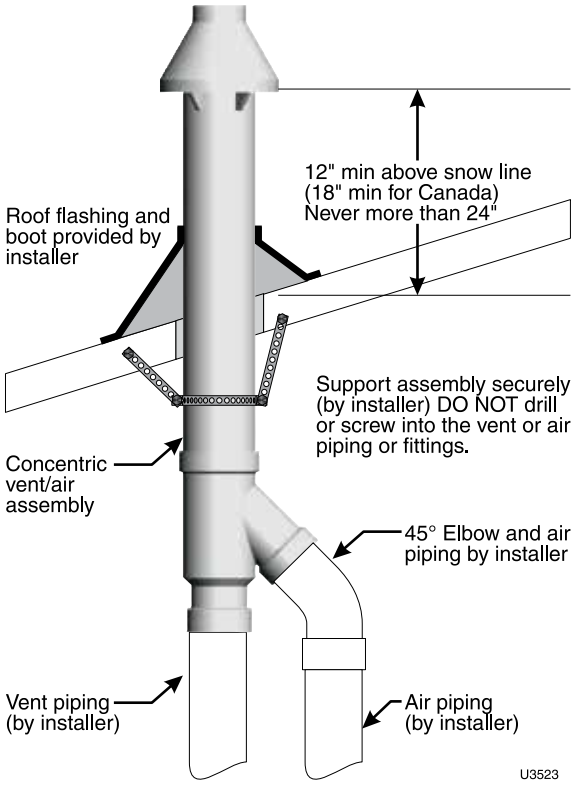

DIRECT VENT - Vertical Vent/Sidewall Air

Allowable Vent/Air Pipe Materials & Lengths

WARNING

Use only the vent materials and kits listed in **Figure 42, page 41**. Provide pipe adapters if specified.

1. Locate the terminations such that the total air piping and vent piping from the boiler to the termination will not exceed the maximum length given in **Figure 41, page 40**.

Polypropylene

For polypropylene applications, see venting and air piping notes on **page 44**.

AL29-4C S.S.

For AL29-4C vent pipe applications, See venting and air piping notes on **page 44**.

Prepare Roof Penetration

1. Vent pipe penetration:
   a. Cut a hole for the vent pipe. For either combustible or noncombustible construction, size the vent pipe hole at least 0.4" larger than the vent pipe diameter.
   b. Insert a galvanized metal thimble in the vent pipe hole.
2. Follow all local codes for isolation of vent pipe when passing through floors, ceilings and roofs.
3. Provide flashing and sealing boots sized for the vent pipe and air pipe.

Vent Termination and Fittings

1. Prepare the vent termination coupling by inserting a bird screen. Bird screens must be purchased separately. See the parts list at the end of this manual for part numbers.
2. Maintain the required dimensions of the finished termination piping as shown in **Figure 60, page 55**.

Multiple Vent Terminations

1. When terminating multiple Evergreen® Pro boilers, terminate each vent/air connection as described in this section.
2. Place adjacent terminations at least 6 inches apart.
3. For Canadian installations, provide clearances required by Natural Gas and Propane Installation CAN/CSA B149.1 or B149.2 Installation Code.

Figure 59 **INSTALLATION SEQUENCE** - Vertical vent/ sidewall air

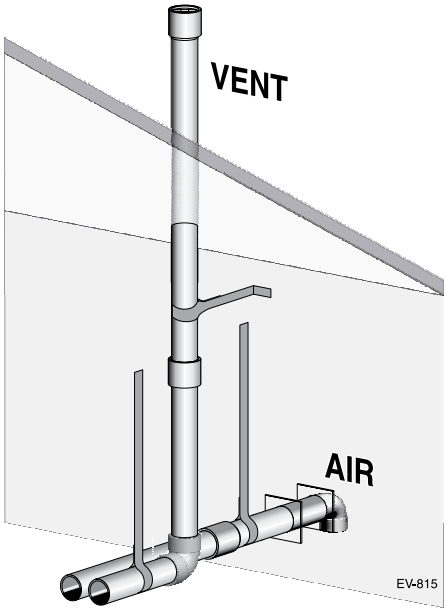

Step 1 Read and follow all instructions in this manual. **DO NOT proceed with vent/air installation until you have read page 35 through page 41.** Polypropylene AL29-4C S.S. See notices at left.

Step 2 Install the boiler in a location that allows proper routing of all vent and air piping to the selected locations.

Step 3 Make sure the selected vertical termination location complies with **Figure 45, page 45**.

Step 4 Use only the vent materials listed in **Figure 42, page 41**. Provide pipe adapters where required. Vent piping and air piping lengths must not exceed the values shown in **Figure 41, page 40**.

Step 5 Prepare the vertical penetration (vent) and sidewall penetration (air) and secure penetration components as instructed in this section.

Step 6 The air piping must terminate in a 90-degree **down-turned elbow** as shown above. The vent piping must terminate in a **coupling pointed upward** as shown above.

Step 7 Install vent and air piping between the boiler and the air and vent terminations. Slope horizontal piping downward toward the boiler at least 1/4 inch per foot. Install pipe supports every 5 feet on both the horizontal and vertical runs. Install a hanger support within 6 inches of any up-turn in the piping. See **page 42** for general guidelines. Also comply with vent pipe manufacturer's instructions. Polypropylene AL29-4C S.S. See notices at left.

Step 8 Insert the vent and air piping through the penetrations and secure the termination fittings.

Step 9 Maintain clearances shown in this section. Vent and air terminations must be fitted with bird screens as shown.

WARNING

USE SWEEP ELBOWS FOR ALL VENT AND AIR PIPING - DO NOT use short radius elbows for vent or air piping. Boiler performance could be affected.

DIRECT VENT - Vertical Vent/Sidewall Air (continued)

Determine Location for Air Inlet Elbow

1. The air inlet of an Evergreen® Pro boiler is part of a direct vent connection. It is not classified as a forced air intake with regard to spacing from adjacent appliance terminations.
2. Locate the air inlet elbow (termination) using the following guidelines.
3. The air piping must terminate in a down-turned elbow as shown in **Figure 61**.
   a. Apply the configuration on the left side of **Figure 61** unless the terminations would fail to meet minimum clearance to grade or snow line.
   b. Apply the configuration on the right side of **Figure 61** when the terminations need to be raised higher to meet clearance to grade or snow line.
   c. The air pipe may run up the side of the building, as shown. The vent and air pipes must be secured with braces, and all clearances and lengths must be maintained. Space braces no further than 24 inches apart.
4. You must consider the surroundings when terminating the air connection:
   a. Make sure there are no obstructions for air flow. DO NOT locate the termination where plants could grow and cause obstruction to air flow.
   b. Do not locate the terminations where wind eddies could affect performance or cause recirculation with exhaust from other appliances, such as inside building corners, near adjacent buildings or surfaces, window wells, stairwells, alcoves, courtyards or other recessed areas.
   c. Locate the air inlet termination at least 12 inches below and 12 inches horizontally from any appliance or building vent outlet.
5. Locate terminations so they are not likely to be damaged by foreign objects, such as stones or balls, or subject to buildup of leaves or sediment.

Multiple Air Terminations

1. When terminating multiple Evergreen® Pro boiler air connections, terminate each air connection as described in this manual.
2. Place wall penetrations to obtain minimum clearances as instructed in this manual.
3. Place adjacent air inlets for multiple Evergreen® Pro boilers at least 6 inches apart.
4. For Canadian installations, provide clearances required by Natural Gas and Propane Installation CAN/CSA B149.1 or B149.2 Installation Code.
5. Combustion air (NOT vent piping) can be manifolded as shown in the Evergreen® Pro Advanced manual.

Prepare Wall Penetrations

1. Air pipe penetration:
   a. Cut a hole for the air pipe. Size the air pipe hole as close as desired to the air pipe outside diameter.
2. Seal exterior openings thoroughly with exterior caulk.

Termination and Fittings

1. Prepare the air termination elbow (**Figure 61**) by inserting a bird screen. Bird screens must be purchased separately. See the parts list at the end of this manual for part numbers.
2. Use metal plates (by installer) at inside and outside penetrations using the method shown in **Figure 49, page 47**.

WARNING

If extending the air pipe out from the wall, install a coupling on each pipe. Mount the piping with the coupling flush with the outer plate.

Figure 60 Vent termination (through the roof) for direct vent: vertical vent / sidewall air

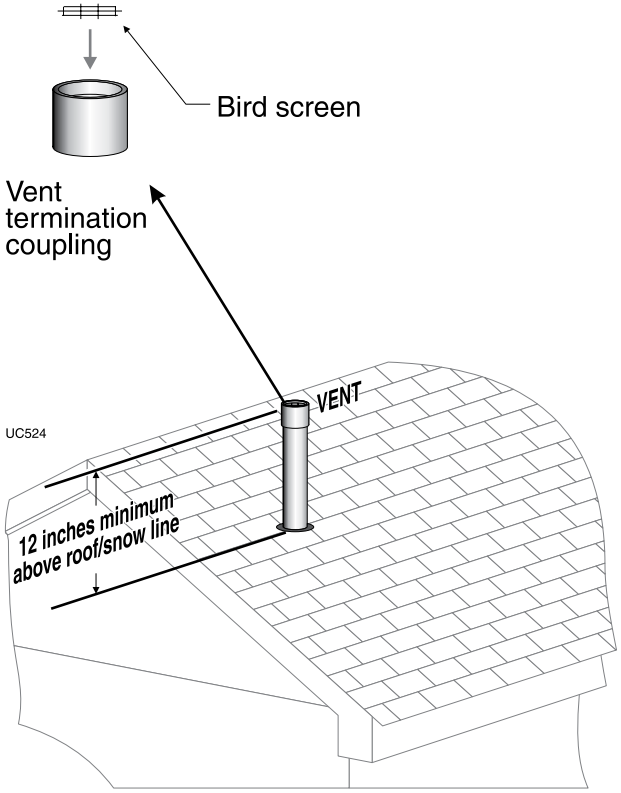

Figure 61 Sidewall air inlet (termination) for direct vent: vertical vent / sidewall air

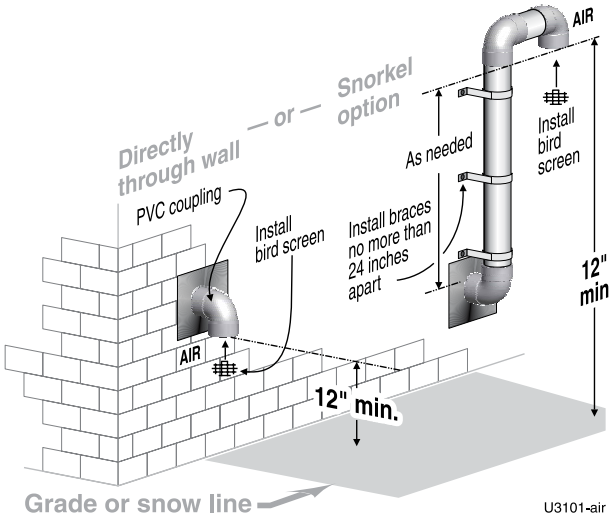

Concentric Termination, Typical (sidewall or vertical)

Figure 62 **PVC** concentric termination assembly - DO NOT attach the rain cap until the termination has been inserted through the roof or wall and all supports have been installed. See LEGEND at right. See kit instructions for details of polypropylene kits.

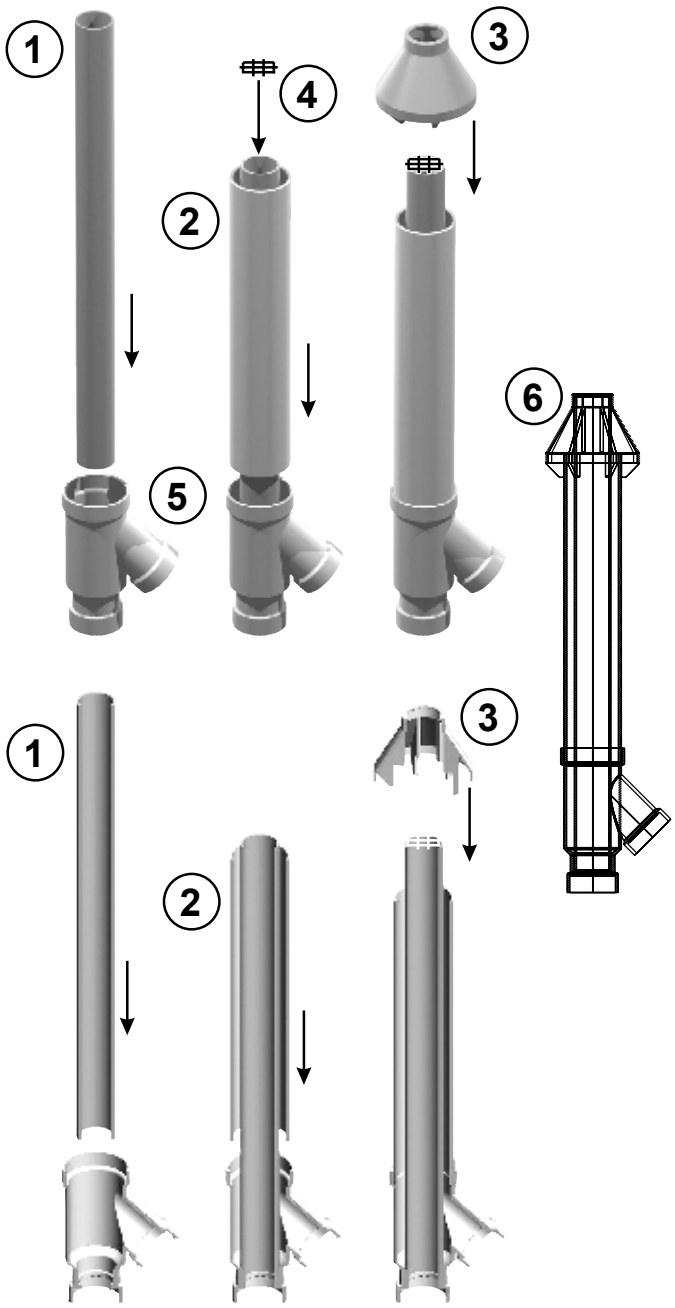

LEGEND for Figure 62

1. Inner PVC pipe (vent)
2. Outer PVC pipe (air)
3. Rain cap
4. Bird screen
5. Y fitting
6. Finished assembly

Assembling Concentric Termination

1. Follow all instructions provided with the concentric termination kit. The following are general guidelines for information only
2. See **Figure 62** for the typical assembly of a concentric termination assembly.
3. Prepare the bird screen, item 4 (purchase separately if not included with the kit). Cut the bird screen to size if required. If the bird screen must be trimmed, cut the bird screen to fit the outside diameter of the PVC inner pipe supplied with the termination kit.
4. Partially assemble the vent termination kit in the sequence shown in **Figure 62**, or per the concentric kit instructions.

WARNING

- **DO NOT** install the rain cap and bird screen until the assembly has been inserted through the roof (or sidewall) and all supports have been installed. Follow instructions to cover the end of the assembly with plastic before inserting through the roof penetration to prevent debris from blocking the air passages.
- If necessary, you can shorten the lengths of the inner and outer pipes for a shorter finished assembly. But you must ensure the pipes butt correctly at both ends. Failure to properly assemble the concentric termination can result in flue gas recirculation, causing possible severe personal injury or death.

Polypropylene

For polypropylene applications, see venting and air piping notes on **page 44**.

AL29-4C S.S.

For AL29-4C vent pipe applications, See venting and air piping notes on **page 44**.

DIRECT Exhaust - Kit Option

Weil-Mclain's Direct Exhaust Kit must be used to field convert the **Evergreen® Pro** Boiler to a Direct Exhaust Boiler. All instructions contained in this manual and in the Direct Exhaust Venting Kit Instructions must be followed. For complete installation guide, please refer to the Direct Exhaust Venting Kit Instructions are included inside the Direct Exhaust Venting Kit, part number listed below.

VENT/AIR PARTS AND KITS (PVC or STAINLESS STEEL) Available from WM Technologies	
Weil-McLain Direct Exhaust Venting Kit (EVG 110/155) Includes interior/exterior intake/exhaust plates, 2" & 3" vent screens, templates & mounting hardware	383-500-778
Weil-McLain Direct Exhaust Kit (EVG 220-399) Includes mounting plates for intake and exhaust for inside and outside, vent screen 3 & 4 inch, template vent/air termination hole, and mounting hardware	383-500-769

Installation instructions

Installer

WARNING

Read all instructions before installing. Follow all instructions in proper order to prevent personal injury or death.

NOTICE

Inlet and outlet pipe and fittings provided by installer.

1. Install 3” (EVG 110/155) or 4" (EVG 220-399) diameter PVC or CPVC pipe and elbow on air inlet of boiler.
2. Install 3” (EVG 110/155) or 4" (EVG 220-399) screen in opening of elbow.

NOTICE

Installation of pipe and elbow in inlet is to prevent objects from inadvertently entering or blocking air inlet.

3. Use the template to cut appropriate hole in wall for exhaust. Use only the exhaust hole!
4. Run the exhaust vent piping to the wall in accordance with the instructions shown on the following pages.
5. Install appropriate size bird screen in end termination.

Combustion Air Provision

The boiler can use inside air if no contaminants are present in the boiler space. (If contaminants are likely to be present, install the boiler as a direct vent appliance, using the appropriate vent instructions in the boiler manual.)

The boiler room must be fitted with combustion air openings large enough to provide air for all appliances in the room. Use the following information to size the openings. Ensure the installation complies with all applicable codes and standards.

Sizing Combustion Air Openings

Air openings provide for ventilation (as well as combustion air) to prevent overheating of the boiler controls and boiler space. Air is also needed for other appliances located in the same space.

Use **Figure 42, page 41**, selecting the appropriate installation conditions.

WARNING

Air openings must be sized to handle all appliances and air movers (exhaust fans, etc.) using the air supply.

The sizing given in **Figure 42, page 41** is based on the National Fuel Gas Code, ANSI Z223.1/NFPA 54 - latest edition, allowing adequate air openings for gravity-vented gas appliances (Category I) in addition to that needed for the **Evergreen® Pro** boiler.

WARNING

Installers must add in Evergreen® Pro's BTU rating into calculations in **Figure 42, page 41**, along with all the other appliances in the room.

The air openings recommended in **Figure 42, page 41**will allow adequate ventilation and combustion air provided the boiler room is not subjected to negative pressure due to exhaust fans or other mechanical ventilation devices.

Refer to the National Fuel Gas Code for dealing with other conditions.

Maximum vent and air pipe length (for each)
110/155/220 3" - 100 feet
220/299/300/399 4" - 100 feet
(Minimum length for all applications is 2 feet)
(All applications include allowance for the termination fittings plus one elbow in air piping and one elbow in vent piping).

USE SWEEP ELBOWS ONLY

(Please refer to all notes and warning on **page 37** . For Vent and Air piping materials, refer to **Figure 40, page 38**).

Evergreen® Pro Model	SIDEWALL termination (Note 1 & 2, Figure 39, page 37)		VERTICAL termination	
	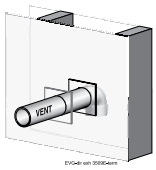			
	Size, inches	Materials page 4	Size, inches	Materials page 4
110/155	3	PVC/PVC-DWV CPVC, PP, SS	3	PVC/PVC-DWV CPVC, PP, SS
220	3	PVC/PVC-DWV CPVC, PP, SS	3	PVC/PVC-DWV CPVC, PP, SS
	4	PVC/PVC-DWV CPVC, PP, SS	4	PVC/PVC-DWV CPVC, PP, SS
299/300/399	4	PVC/PVC-DWV CPVC, PP, SS	4	PVC/PVC-DWV CPVC, PP, SS

Install Water Piping

WARNING

Use two wrenches when tightening water piping at boiler, using one of the wrenches to prevent the boiler interior piping from turning. Failure to support the boiler piping connections to prevent them from turning could cause damage to boiler components.

2

General Piping Information

Use Piping Unions Near Boiler

Installing unions in the near boiler piping are recommended for facilitating future service requiring heat exchanger removal. Use 1" NPT unions for 110/115 and 1.5" NPT unions for 220-399 on the boiler inlet and outlet connections. Pipe unions are not included with the boiler.

Additional Controls, if Required

NOTICE

The control uses temperature sensors to provide both high limit protection and modulating temperature control. **The control's high limit function requires manual reset**. Some codes/jurisdictions may require additional external controls for high limit and/or low water cutoff protection.

Additional Limit Controls

Following standard industry practices, if installation is to comply with ASME or Canadian requirements, an additional high temperature limit may be needed. Consult local requirements for other codes/standards to determine if needed.

1. Install a manual reset high temperature limit constructed to prevent a temperature setting above 200°F in system supply piping between boiler and isolation valve. (Note that the control operating limit function shuts the boiler down at 195°F, or lower if set to a lower value.)

WARNING

- **Multi-temperature systems** - If the heating system includes circuits that require lower temperature water (radiant slab circuits, for example) as well as higher temperature circuits, it is recommended to protect low-temperature circuits with limit controls that are wired to the control external limit circuit terminals.
- Low temperature materials - If using temperature-limited materials (such as PEX tubing) in system piping, it is recommended to protect the system with limit controls that are wired to the controls external limit circuit.

2. See instructions beginning on **page 74** for wiring information.
3. When using a manual reset limit control or wiring in the manual reset circuit, preferably set Max. Boiler Temperature or Supply Max. at least 20°F less than the external manual reset limit (i.e. set control no higher than 180°F for a 200°F external limit, for example).

Low Water Cutoff

1. A low water cutoff is recommended when the boiler is installed above piping level, and may be required by certain state or local codes or insurance companies. Consult local requirements to determine. The LWCO Sensor provided, when used with the Unity 2.0 Control, is certified as a UL353 Low Water Cut Off.
2. Install the LWCO Sensor (supplied with boiler) in a tee in the supply piping above boiler **Figure 13, page 21**.
3. See field wiring instructions beginning on **page 74** for wiring additional limit controls.
4. The push-to-test button is located on the Unity 2.0 Control below the J8 and J9 connectors, see **Figure 79, page 84**.
5. The Low Water Faults are manually reset through the main control. This can be performed through the display by selecting <Reset Lockout>.
6. An alternative LWCO device may be used and wired to Connector J21. See Section H **page 80** for wiring instructions. See "**BOILER ACCESSORIES" on page 166** for Alternative LWCO part number.

Backflow Preventer

Use backflow preventer in the cold water supply piping if required by local codes.

System/Zone Pipe Sizing

(Baseboard, convectors or cast iron radiators ONLY)

For residential space heating applications (other than radiant heating or unit heaters) ONLY, you can use the sizing suggestions in **Figure 63**.

Figure 63 Suggested pipe sizing for system headers and zone piping - RESIDENTIAL with baseboard, convectors or cast iron radiators ONLY

EVG Models	System header	Delta T
110	1" or larger	20°F
155	1¼" or larger	20°F
220	1¼" or larger	25°F
299/300	1½" or larger	25°F
399	1½" or larger	30°F

Recommendations are based on a temperature drop indicated in the above table.

Suggested maximum load per zone	
Copper pipe and baseboard size	Maximum recommended feet of baseboard
¾"	67
1"	104

Size zone circulators to handle the required flow and head loss for each zone.

Install Water Piping (continued)

System Water Piping Methods

Direct connection piping to boiler (110/155 only)

Installations using direct connection piping layout should:

1. Read the NOTICES and guidelines beginning on **page 63** to determine if the system is eligible for this piping strategy.
2. If eligible, reference Install Water Piping section on **page 58** through **page 62**. See section Direct Connect System Piping on **page 63** through **page 64** for further details on proper piping installation.
3. Use primary/secondary piping if system ineligible.

Primary/Secondary Piping to Boiler

CAUTION

Use at least the MINIMUM pipe size shown in **Figure 63** on all boiler loop piping (connecting boiler to and from the primary/secondary connection). Failure to follow these guidelines could result in system problems.

Using primary/secondary piping will provide the most efficient and reliable operation of the boiler and the heating system.

1. Use information beginning on **page 61** to size pump for proper flow through the **Evergreen® Pro** boiler.
2. Reference Install Water Piping section on **page 58** through **page 62**. See section Primary/Secondary System Piping on **page 65** through **page 68** for further details on proper piping installation.

NOTICE

Some installations can be piped in numerous other ways that will work equally as well as the suggestions here.

Expansion Tank

Expansion Tank Location

Figure 64, page 60 and **Figure 65, page 60** show typical installation of the system expansion tank. It is highly recommended that you locate the air separator and expansion tank as shown in the suggested piping drawings on **page 60** and **page 60.**

Ensure that the expansion tank size will handle boiler and system water volume and temperature. See tank manufacturer's instructions and ratings for details. Additional tanks may be added to the system if needed to handle the expansion. These tanks may be installed by connecting to tees in the system piping.

CAUTION

Undersized expansion tanks cause system water to be lost from the relief valve and makeup water to be added through the fill valve. Eventual boiler failure can result due to excessive make-up water addition. Always locate the cold-water fill connection at the expansion tank. Never locate this elsewhere.

Diaphragm - or Bladder-Type Tank:

Refer to **Figure 64, page 60** for suggested piping when using a diaphragm- or bladder-type expansion tank.

Install an automatic air vent on top of the air separator, per separator manufacturer's instructions.

NOTICE

Diaphragm- or bladder-type expansion tank - Control fill pressure with the tank air charge pressure. Always check pressure and charge tank with tank removed from system to be sure reading is accurate. Boiler relief valve is set for 30 PSIG. Operating pressure of system, after temperature expansion above cold fill pressure, should not exceed 24 PSIG to avoid weeping of relief valve.

Closed-Type Expansion Tank:

CAUTION

- DO NOT use a closed-type tank if connecting to a water heater that is equipped with an automatic air vent.

Figure 65, page 60 shows suggested piping when using a closed-type expansion tank, in which the air is directly in contact with tank water.

Connect piping (½" or ¾") from the air separator outlet to the tank fitting. Slope any horizontal piping a minimum of 1 inch per 5 feet of horizontal pipe.

Always use a tank fitting such as the B&G Tank-trol or Taco Taco-trol (shown). The fitting reduces gravity flow of water in the piping to the tank, avoids air bubbling through the tank water, and provides the proper fill height in the tank

CAUTION

- Correct all leaks in the system or tank piping. Leaks allow air to escape from the system and will cause water-logging of the tank. This will result in water loss through the boiler relief valve due to over-pressurization. NEVER use an automatic air vent in a system equipped with a closed-type expansion tank. The air removed from the system will cause water-logging of the expansion tank.

Install Water Piping (continued)

Figure 64 Piping to diaphragm- (or bladder-) type expansion tank

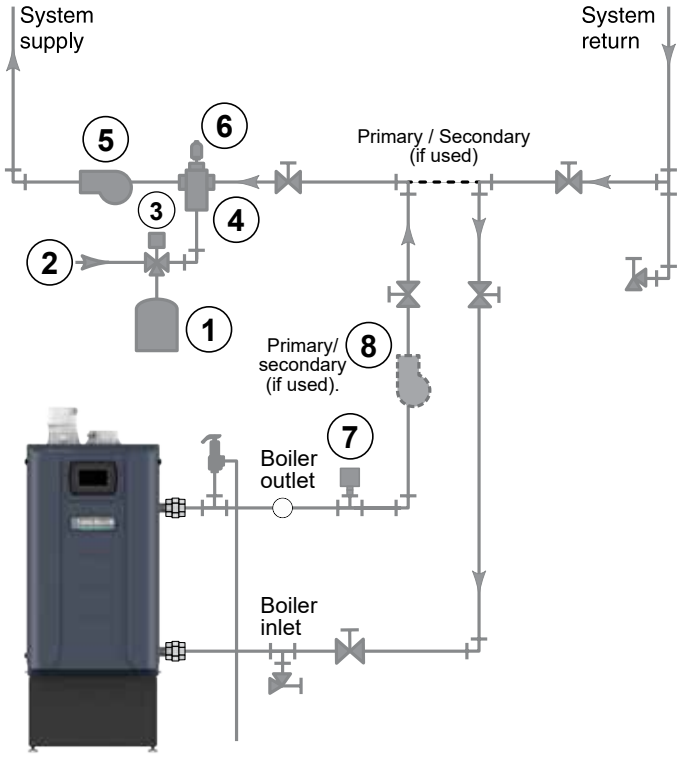

1) Diaphram-type expansion tank
2) Make-up water supply
3) Fill valve, typical
4) Air separator
5) System circulator
6) Automatic air vent
7) Low Water Cut-Off
8) Boiler Circulator - Primary/ Secondary Piping (if used)

Figure 65 Piping to closed-type expansion tank

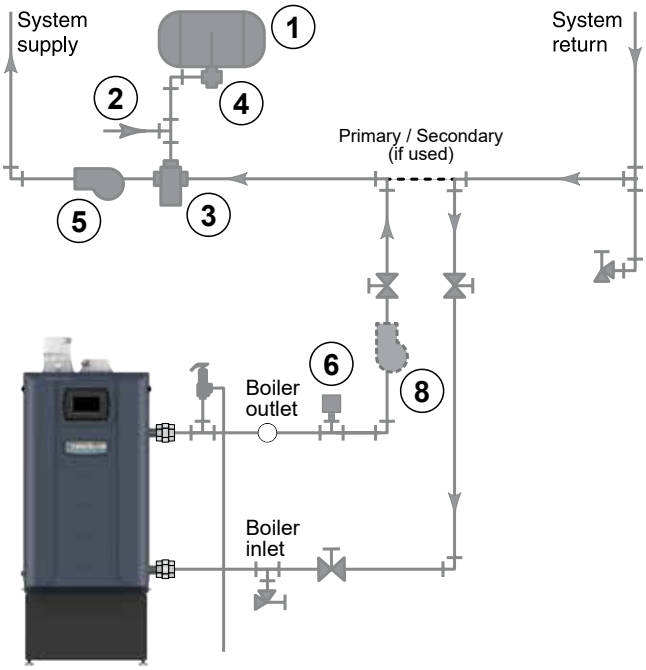

1) Closed-type expansion tank
2) Make-up water supply
3) Air separator
4) Tank fitting
5) System circulator
6) Low Water Cut-Off
8) Boiler Circulator - Primary/ Secondary Piping (if used)

NOTICE

Closed-type expansion tank - Follow tank manufacturer's instructions for filling the tank. Typical tank sizing provides for approximately 12 PSIG when the tank is filled to the normal level and system water is cold. Note that boiler relief valve is set for 30 PSIG. Operation pressure of system, after temperature expansion above cold fill pressure, should not exceed 24 PSIG to avoid weeping of relieve valve.

Install Water Piping (continued)

Circulators

The boiler circulator (Taco 007e for Evergreen® Pro 110, Taco 0015e for Evergreen® Pro 155, Taco 0014 for Evergreen® Pro 220, 299 and 300; Taco 0013 for Evergreen® Pro 399) is shipped loose. Locate it in the boiler outlet, as shown in the appropriate piping diagram in this manual.

WARNING

DO NOT use the boiler circulator in any location other than the ones shown in this manual. The boiler circulator is selected to ensure adequate flow through the boiler.

Failure to comply could result in unreliable performance and nuisance shut downs from insufficient flow.

System Circulators and Zone Circulators

Install a system circulator or zone circulators as shown in the piping diagrams in this manual. These circulators must be supplied by the installer. If using Direct Connect System Piping (110 / 155 only), the shipped boiler circulator may be used if meeting the required system flow and head requirements listed in this manual.

System or Zone Circulator Flow Rate

1. Size circulators based on the flow rate required to achieve the temperature change needed.
2. You can closely estimate temperature rise (or drop) through a circuit by using the following formula, where TD is temperature rise (or drop), FLOW is flow rate (in gpm), and BTUH is the heat load for the circuit:

$$\text{FLOW} = \frac{\text{BTUH}}{\text{TD x 500}}$$

Example:

Consider a system loop for a system with total heating load equal to 110,000 Btuh. The desired temperature drop through the system piping is 20°F. Then the required flow rate is:

$$\text{FLOW} = \frac{110{,}000}{20 \text{ x } 500} = 11 \text{ gpm}$$

SIMPLIFIED:

For 20° temperature drop, FLOW = MBH / 10.

System or Zone Circulator Head Requirement

3. The circulator must be capable of delivering the required flow against the head loss that will occur in the system piping for Primary/Secondary systems. If using Direct Connect system piping (110/155 only), add in the additional pressure drop through the boiler, including near boiler piping. See **Figure 66, page 62** for boiler pressure drop.
4. Determine the pipe size needed and the resultant head loss using accepted engineering methods.

Connecting to Heating Coils:

If the boiler piping system is connected to heating coils located in air handling units where there may be exposed to refrigerated air circulation then it must be equipped with flow control valves or other automatic means to prevent gravity circulation of the boiler water during the cooling cycle.

Install Relief Valve

1. Install relief valve in a reducing tee, NPT, 1½" x 1¼" x ¾" on Evergreen® 220 or 1½"x 1½"x ¾" on Evergreen® 299/300/399 on the boiler supply piping tee (**Figure 12, page 21**). The Evergreen® 220, 299 and 300 boilers come shipped loose with a 30 PSIG, 375 MBTU relief valve. The Evergreen® 399 boiler comes shipped loose with a 30 PSIG, 575 MBTU relief valve. This boiler is capable of a pressure up to 80 PSIG. Please see Miscellaneous parts and kits in Replacement parts for Weil-McLain alternate pressure components.
2. If using a relief valve with a rating higher than 30 psi, other system components may require higher pressure rated equipment such as pressure gauges and expansion tank. Consult local requirements and other codes/standards for required equipment, if needed.
3. Pipe the relief valve only as shown, in the location shown.
4. Connect discharge piping to safe disposal location, following guidelines in the following WARNING.

WARNING

- **To avoid water damage or scalding due to relief valve operation, as per local or state codes**:
- Install relief valve ONLY with the spindle vertical, as shown in illustrations in this manual.
- Discharge line must be connected to relief valve outlet and run to a safe place of disposal. Terminate the discharge line in a manner that will prevent possibility of severe burns or property damage should the valve discharge. Locate away from the top of the boiler.
- Discharge line must be as short as possible and be the same size as the valve discharge connection throughout its entire length.
- Discharge line must pitch downward from the valve and terminate at least 6" above the floor drain where any discharge will be clearly visible.
- The discharge line shall terminate plain, not threaded, with a material serviceable for temperatures of 375 °F or greater.
- Do not pipe the discharge to any place where freezing could occur.
- No shutoff valve shall be installed between the relief valve and boiler, or in the discharge line. Do not plug or place any obstruction in the discharge line.
- Test the operation of the valve after filling and pressurizing system by lifting the lever. Make sure the valve discharges freely. If the valve fails to operate correctly, replace it with a new relief valve.
- Failure to comply with the above guidelines could result in failure of the relief valve to operate, resulting in possibility of severe personal injury, death or substantial property damage.

Install Water Piping Piping (continued)

Figure 66 Pressure drop through **EVG** heat exchanger

EVG 110			EVG 155			EVG 220			EVG 299/300			EVG 399		
Flow Rate (GPM)	Head Loss (ft. w.c.)	ΔT (°F)	Flow Rate (GPM)	Head Loss (ft. w.c.)	ΔT (°F)	Flow Rate (GPM)	Head Loss (ft. w.c.)	ΔT (°F)	Flow Rate (GPM)	Head Loss (ft. w.c.)	ΔT (°F)	Flow Rate (GPM)	Head Loss (ft. w.c.)	ΔT (°F)
5**	0.3	40***	7**	0.39	41***	10**	0.00	45***	13**	0.0	45***	18**	0.0	45***
6.5	0.51	31	9	0.65	32	12	0.00	37***	18	0.3	33	24	0.3	33
8	0.77	25	11	0.97	26	14	0.1	31	22*	0.6	27	28*	0.7	29
10*	1.2	20	13	1.35	22	16	0.2	28	28	1.2	21	32	1.1	25
			14.5*	1.68	20	18*	0.2	24	32	1.7	19	36	1.6	22
						20	0.3	22	–	–	–	40	2.2	20
						22	0.5	20	–	–	–	–	–	–

Note: Delta Temperatures above are based on Boiler running on High Fire

* Suggested design flow rates based on a 20°F (EVG 110/155), 25°F (EVG 220/299/300) and 30°F (EVG 399) temp rise through the boiler.

** Minimum Flow Rates at high fire (GPM):

EVG 110: High Fire = 5.0, Low Fire = 2.1

EVG 155: High Fire = 7.0, Low Fire = 2.9

EVG 220: High Fire = 10, Low Fire = 2.4

EVG 299/300: High Fire = 13, Low Fire = 3.2

EVG 399: High Fire = 18, Low Fire = 4.0

***Temp Rises above 35°F are not recommended in high temp systems; larger Boiler Out on/off Diff's may be required for proper operation

Notice: Boilers are designed to reduce firing rate when differential temperature reaches 50°F. When using boiler in a modulating flow, the minimum allowable water flow rate during low fire operation is listed above. The variable speed pump must control flow between minimum and full rate in accordance with firing rate. See Faults and Action Items beginning on **page 157**.

Direct Connect System Piping - Single Boiler System

Verify the Application will Work (Direct Connect for 110/155 only):

NOTICE

- For systems requiring a higher flow than that recommended in **Figure 66** – DO NOT use a direct connect piping layout. Design system using a primary/secondary piping layout using guidelines starting on **page 65**.
- Systems zoning with circulators must use primary/secondary piping layout using guidelines starting on **page 65**.

Check System Flow Rate

To determine whether direct connection will provide suitable flow for the intended application, refer to **Figure 66**.

1. The minimum temperature rise across the heat exchanger/boiler is 20°F. Using flow rates higher than the maximum listed in **Figure 66** is NOT RECOMMENDED.
2. Design zoning to ensure minimum flow rate is maintained under any call for heat condition that could see full input rate (High Fire).

NOTICE

- Systems using a modulating pump may operate below the High Fire minimum flow rates listed in **Figure 66** only if the boiler is operating at a reduced firing rate (low fire) when doing so and must be above the Low Fire minimum flow rates listed in **Figure 66**. A pump that modulates based on the system Delta T (ΔT) would provide such operation assurance by varying flow with firing rate.

Use a primary/secondary piping layout if the total flow through the heat exchanger will be higher than the maximum listed in **Figure 66**.

Check System Pipe Design

Only systems with a single system pump zoned with zone valves may use the direct connect system piping methods shown here.

NOTICE

Any system zoned with zone valves must include a by-pass pressure regulator. Failure to comply may reduce pump life.

Circulators

The boiler circulator (Taco 007e for **Evergreen® Pro** 110; Taco 0015e for **Evergreen® Pro** 155) is shipped loose. Locate it in the boiler outlet, as shown in the appropriate piping diagram in this manual. If provided circulator does not meet flow and or head loss requirements, circulator must be supplied by installer.

WARNING

DO NOT use the boiler circulator in any location other than the ones shown in this manual. The boiler circulator is selected to ensure adequate flow through the boiler.

Failure to comply could result in unreliable performance and nuisance shut downs from insufficient flow.

NOTICE

If replacing included circulator with replacement Taco 00e model, replace only with Taco Model 007e or 0015e circulator. Set to maximum setting unless reduced flow rate is needed, then adjust circulator dial as needed ensuring proper flow rate is achieved according to the methods described in this manual.

You may use standard Taco 007 and 0015 circulators in place of respective 007e and 0015e models.

System Water Piping Method:

1. The circulator must be capable of delivering the required flow against the head loss that will occur in the heat exchanger, near boiler piping, and the system piping.
2. Use method on **page 61** to calculate system flow rate. Calculate near boiler piping and system head loss using accepted engineering methods.
3. Ensure Heat Exchanger Head Loss, see **Figure 66, page 62**, near boiler piping Head Loss, and System Head Loss, are added together to calculate Total Head requirement to determine if the 007e or 0015e circulator will provide proper flow rate through boiler and system or sizing a different higher head circulator.
4. Use the manufacturer's Circulator Performance Curves in conjunction with the Total Head requirement to determine if the circulator and system piping design is designed properly to meet the required flow rates as stated in **Figure 66, page 62**. Use accepted engineering methods as needed.

Direct Connect System Piping - Single Boiler System

(continued)

ZONE VALVE Zoning – Direct Connection (110/155 only)

(Shown with optional DHW piping)

See Figure 67.

1. This configuration is for zone valve systems that qualify to use direct connection piping based on the criteria on **page 63** only. If system does not qualify, pipe using primary/secondary piping. See **page 65**-**page 68** for piping suggestions and guidelines.
2. Systems zoned with zone valves MUST use a by-pass pressure regulator (Taco 3196 shown).
3. Install a system circulator (supplied by installer) capable of delivering the proper flow and head as shown.

Expansion Tank Required

1. Provide a system expansion tank following the guidelines on **page 63** or **page 66**.
2. **DO NOT** use a closed-type tank if connecting to a water heater that is equipped with an automatic vent.

Domestic Hot Water (DHW) Tank, if used

1. DHW direct connection - Pipe from the near-boiler piping to the DHW tank's boiler connections as shown. Ensure Boiler Pump is configured to off for DHW Priority.
2. DHW Priority operation - Using Priority 1 for DHW (default) will turn off lower priorities during DHW calls. The MAX ON TIME setting can be adjusted to limit how long this occurs. Use Priority 2 or 3 for DHW if DHW priority is not desired.

NOTICE

Overriding the Outdoor Reset function by setting control to DHW mode when system is intended for space heating may violate **Section 303 of the 2007 Energy Act.** See **page 192** for compliance information and exemptions.

Controlling the Circulators

1. The control can control up to to four assignable 120V Outputs and one 120V Boiler Circulator. Refer to Field Wiring, beginning on **page 74**, for instructions on wiring to circulators.
2. The factory default settings are not configured. Each input correlates to its respective circulator output. For DHW Priority applications, wire aquastat to Input 1 and assign to Priority 1. See Field wiring instructions, beginning on **page 74**, for details.

Figure 67 **EVG 110/155** Zone valve zoning direct connection (system circulator provides flow for system)

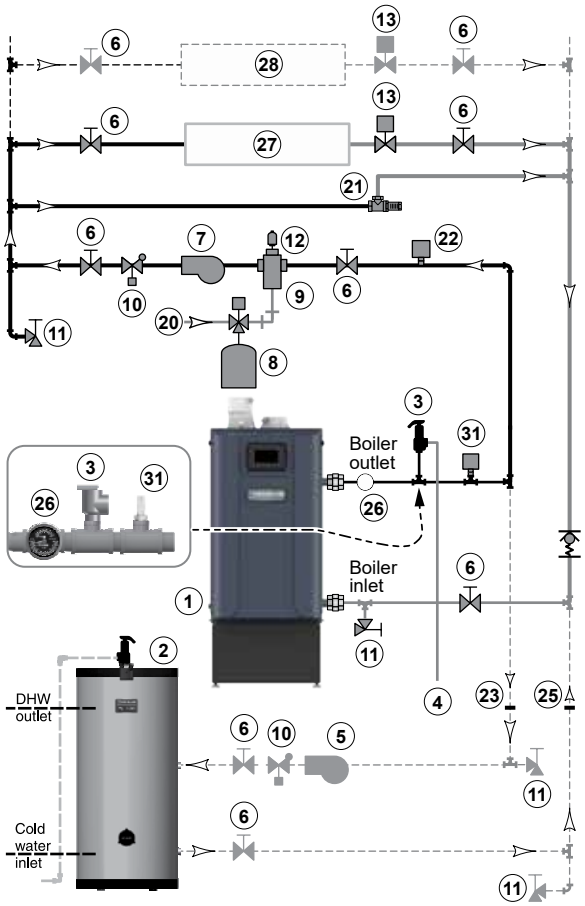

NOTICE

Connect zone valve end switches to Priority 2 input. Connect system circulator to Circ. 2 output.

CAUTION

Use isolation relays if connecting 3-wire zone valve end switches to the input.

LEGEND for Figure 67 | **Note:** This is a common legend for all piping diagrams. Not all items listed appear in every figure.

1. Evergreen® Pro boiler
2. Indirect Water Heater, if used
3. Relief valve, supplied with boiler, field piped - MUST be piped to boiler supply connection - see page 13 for information
4. Relief valve piping to drain - see **page 65**
5. DHW circulator
6. Isolation valves
7. System circulator
8. Expansion tank, diaphragm type, if used
9. Air separator
10. Flow/check valves
11. Purge/drain valves (one drain valve shipped loose with boiler)
12. Auto air vent
13. Zone valves
14. Primary/secondary connection (tees no more than 12 inches apart)
15. Expansion tank, closed type, if used (some chiller systems may use a diaphragm-type expansion tank)
16. Water chiller
17. Check valve
18. Y-strainer
19. Balancing valve
20. Make-up water supply – Use applicable codes to determine if backflow preventers, pressure reducing valves, and fill valves may be required
21. By-pass pressure regulator, REQUIRED for zone valve systems unless other provision is made
22. High limit temperature control
23. DHW tank boiler water supply connection, when used
24. Zone circulator
25. DHW tank boiler water return connection, when used
26. Pressure/temperature gauge, supplied with boiler, field piped
27. Heating circuits
28. Additional heating circuits, if any
29. Boiler circulator, if any
30. Mixing valve, if any
31. Low Water Cut-Off

Primary/Secondary System Piping - Single Boiler System

See Advanced Manual for Multiple Boiler Systems

Near Boiler Piping and Boiler Circulator

1. Connect boiler to system only as shown in **Figure 68, Figure 69** and **Figure 70**. The primary/secondary piping shown ensures the boiler loop will have sufficient flow.
2. Select a boiler loop temperature rise from **Figure 66**. The table indicates the flow and head loss characteristics at that temperature rise.
3. The provided boiler circulator (007e, 0015e, 0014, or 0013) will provide the proper flow rate through the boiler and boiler loop piping in most cases. In complicated, long run, or undersized piping systems, a higher head circulator may be required to ensure proper flow rate.

NOTICE

- Verify that the boiler loop piping matches closely with the listed criteria in the *NOTICE* below.

  If near boiler piping is different, calculate head loss separately using heat exchanger pressure drop information from **Figure 66, page 62** and add in the additional head loss from the boiler loop piping. Estimate this head loss by using accepted engineering methods.

  Use the manufacturer's Circulator Performance Curves in conjunction with the estimated head loss from above to determine if the 007e, 0015e, 0014, or 0013 circulator will provide proper flow rate through the boiler and boiler loop piping. If proper flow cannot be achieve a different higher head circulator is required.

System Circulators and Zone Circulators

1. Install a system circulator or zone circulators as shown in the piping diagrams in this section. These circulators must be supplied by the installer.

System or Zone Circulators Flow Rates

1. Size circulators based on the flow rate required to achieve the temperature change you needed.

System or Zone Circulator Head Requirement

1. The circulator must be capable of delivering the required flow against the head loss that will occur in the piping.
2. Determine the pipe size needed and the resultant head loss using accepted engineering methods.

Install Relief Valve

1. Install relief valve according to instructions on **page 61**.
2. Pipe the relief valve only as shown, in the location shown.

System Water Piping Method:

1. The system circulator (provided by installer) must be capable of delivering the required flow against the head loss that will occur in the system piping.
2. Use method on **page 61**, section "System or Zone Circulator Flow Rate", to calculate system flow rate and accepted engineering methods to calculate System Head Loss requirements.
3. Use the manufacturer's Circulator Performance Curves in conjunction with the calculated System Flow Rate and System Head Loss to select the properly sized system circulator to meet the required flow rates needed for the system. Use accepted engineering methods as needed.

Primary/Secondary System Piping - Single Boiler System (continued)

See Advanced Manual for Multiple Boiler Systems

Zone Valve Zoning – Primary/Secondary

(Shown with optional DHW piping)

See Figure 68.

1. This configuration is for zone valve systems using a boiler loop connected as a secondary circuit off of a primary system loop. Systems whose flow characteristics do not comply with those listed in the Direct Connect System Piping section starting on **page 63** must pipe the boiler loop as a secondary circuit as show.
2. Systems zoned with zone valves MUST use a by-pass pressure regulator (Taco 3196 or equivalent - Item 6).
3. Install a system circulator (supplied by installer) capable of delivering the proper flow and head as shown.

Expansion Tank Required

1. Provide a system expansion tank following the guidelines beginning on **page 59**.
2. **DO NOT** use a closed-type tank if connecting to a water heater that is equipped with an automatic vent.

Domestic Hot Water (DHW) Tank, if used

1. DHW direct connection - Pipe from the near-boiler piping to the DHW tank's boiler connections as shown. Ensure Boiler Pump is configured to off for DHW Priority.
2. DHW as zone - A DHW tank can be connected as a zone if a DHW tank is **NOT** already connected to the boiler. See notices on **page 192** to ensure compliance with the 2007 Energy Act. Configure Boiler Pump to run during DHW demands and change TARGET MOD SENSOR to System Supply.
3. DHW Priority operation - Using Priority 1 for DHW (default) will turn off lower priorities during DHW calls. The MAX ON TIME setting can be adjusted to limit how long this occurs. Use Priority 2 or 3 for DHW if DHW priority is not desired.

NOTICE

Overriding the Outdoor Reset function by setting control to DHW mode when system is intended for space heating may violate **Section 303 of the 2007 Energy Act.** See **page 192** for compliance information and exemptions.

Controlling the Circulators

1. The control can control up to four assignable 120V Outputs and one 120V Boiler Circulator. Refer to Field Wiring, beginning on **page 74**, for instructions on wiring to circulators.

Figure 68 Zone valve zoning - primary/secondary connection - a system circulator is required

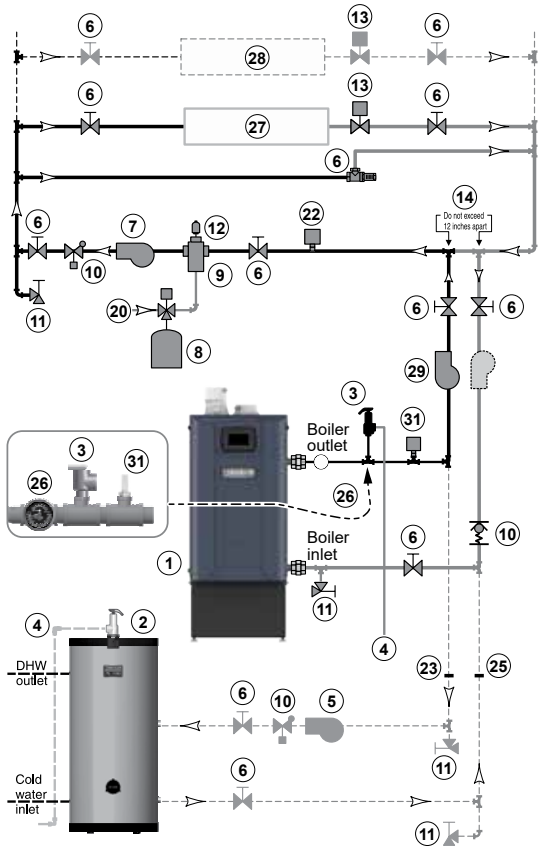

2. The factory default settings are not configured. Each input correlates to its respective circulator output. For DHW Priority applications, wire aquastat to Input 1 and assign to Priority 1. See Field wiring instructions, beginning on **page 74**, for details.

NOTICE

Connect zone valve end switches to Priority 2 input. Connect system circulator to Circ. 2 output.

CAUTION

Use isolation relays if connecting 3-wire zone valve end switches to the input.

LEGEND for Figure 68 | **Note:** This is a common legend for all piping diagrams. Not all items listed appear in every figure.

1. Evergreen® Pro boiler
2. Indirect Water Heater, if used
3. Relief valve, supplied with boiler, field piped - MUST be piped to boiler supply connection - see page 17 for information
4. Relief valve piping to drain - see **page 65**
5. DHW circulator
6. Isolation valves
7. System circulator
8. Expansion tank, diaphragm type, if used
9. Air separator
10. Flow/check valves
11. Purge/drain valves (one drain valve shipped loose with boiler)
12. Auto air vent
13. Zone valves
14. Primary/secondary connection (tees no more than 12 inches apart)
15. Expansion tank, closed type, if used (some chiller systems may use a diaphragm-type expansion tank)
16. Water chiller
17. Check valve
18. Y-strainer
19. Balancing valve
20. Make-up water supply – Use applicable codes to determine if backflow preventers, pressure reducing valves, and fill valves may be required
21. By-pass pressure regulator, REQUIRED for zone valve systems unless other provision is made
22. High limit temperature control
23. DHW tank boiler water supply connection, when used
24. Zone circulator
25. DHW tank boiler water return connection, when used
26. Pressure/temperature gauge, supplied with boiler, field piped
27. Heating circuits
28. Additional heating circuits, if any
29. Boiler circulator, if any
30. Mixing valve, if any
31. Low Water Cut-Off

Primary/Secondary System Piping - Single Boiler System (continued)

Circulator Zoning – Primary/Secondary

(Shown with optional DHW piping)

See Figure 69.

1. This configuration is for circulator-zoned systems using a boiler loop connected as a secondary circuit off of a primary system loop. Systems zoned with circulators must pipe the boiler loop as a secondary circuit as show.
2. Install a separate circulator (supplied by installer) for each zone capable of delivering the proper flow and head as shown.

Expansion Tank required

1. Provide a system expansion tank following the guidelines beginning on **page 59**.
2. **DO NOT** use a closed-type tank if connecting to a water heater that is equipped with an automatic vent.

Domestic Hot Water (DHW) tank, if used

1. DHW direct connection - Pipe from the near-boiler piping to the DHW tank's boiler connections as shown. Ensure Boiler Pump is configured to off for DHW Priority.
2. DHW as zone - A DHW tank can be connected as a zone if a DHW tank is **NOT** already connected to the boiler. See notices on **page 192** to ensure compliance with the 2007 Energy Act. Configure Boiler Pump to run during DHW demands and change TARGET MOD SENSOR to System Supply.
3. DHW Priority operation - Using Priority 1 for DHW (default) will turn off lower priorities during DHW calls. The MAX ON TIME setting can be adjusted to limit how long this occurs. Use Priority 2 or 3 for DHW if DHW priority is not desired.

NOTICE

Overriding the Outdoor Reset function by setting control to DHW mode when system is intended for space heating may violate **Section 303 of the 2007 Energy Act.** See **page 192** for compliance information and exemptions.

Controlling the Circulators

1. The control can control up to four assignable 120V Outputs and one 120V Boiler Circulator. Refer to Field Wiring, beginning on **page 74**, for instructions on wiring to circulators.
2. The factory default settings are not configured. Each input correlates to its respective circulator output. For DHW Priority applications, wire aquastat to Input 1 and assign to Priority 1. See Field wiring instructions, beginning on **page 74**, for details.

Figure 69 Circulator zoning plus optional DHW piping

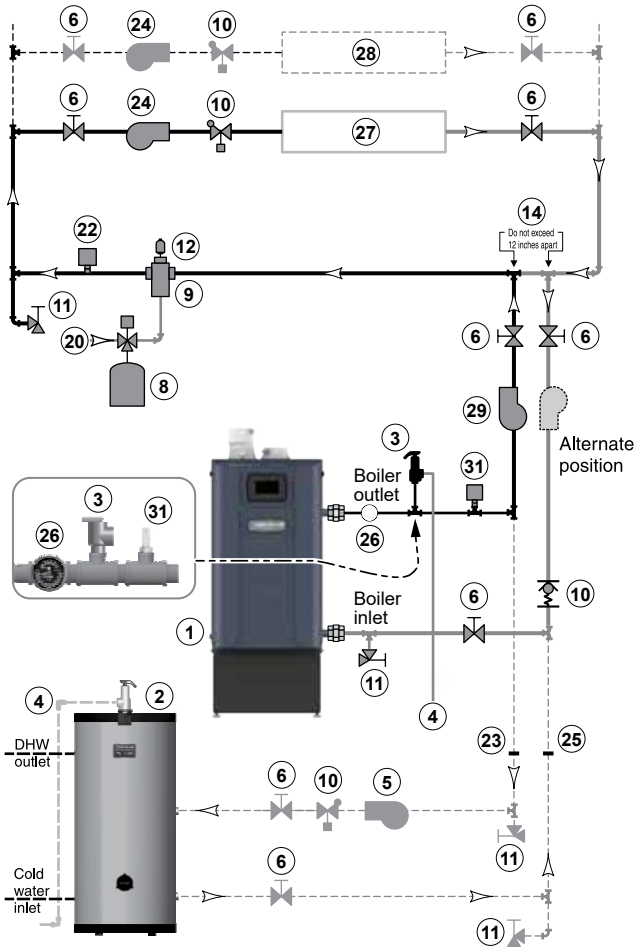

NOTICE

Connect zone valve end switches to Priority 2 input. Connect system circulator to Circ. 2 output.

CAUTION

Use isolation relays if connecting 3-wire zone valve end switches to the input.

LEGEND for Figure 69 and Figure 70

Note: This is a common legend for all piping diagrams. Not all items listed appear in every figure.

1. Evergreen® Pro boiler
2. Indirect Water Heater, if used
3. Relief valve, supplied with boiler, field piped - MUST be piped to boiler supply connection - see page 21 for information
4. Relief valve piping to drain - see **page 65**
5. DHW circulator
6. Isolation valves
7. System circulator
8. Expansion tank, diaphragm type, if used
9. Air separator
10. Flow/check valves
11. Purge/drain valves (one drain valve shipped loose with boiler)
12. Auto air vent
13. Zone valves
14. Primary/secondary connection (tees no more than 12 inches apart)
15. Expansion tank, closed type, if used (some chiller systems may use a diaphragm-type expansion tank)
16. Water chiller
17. Check valve
18. Y-strainer
19. Balancing valve
20. Make-up water supply – Use applicable codes to determine if backflow preventers, pressure reducing valves, and fill valves may be required
21. By-pass pressure regulator, REQUIRED for zone valve systems unless other provision is made
22. High limit temperature control
23. DHW tank boiler water supply connection, when used
24. Zone circulator
25. DHW tank boiler water return connection, when used
26. Pressure/temperature gauge, supplied with boiler, field piped
27. Heating circuits
28. Additional heating circuits, if any
29. Boiler circulator, if any
30. Mixing valve, if any
31. Low Water Cut-Off

Primary/Secondary System Piping - Single Boiler System (continued)

Circulator Zoning – Multiple Temperature Zones with Primary/ Secondary

(Shown with optional DHW piping)

See Figure 70.

1. This configuration is for circulator-zoned systems with **high- and low-temperature heating zones** using a boiler loop connected as a secondary circuit off of a primary system loop. Systems zoned with circulators must pipe the boiler loop as a secondary circuit as shown.
2. Install a separate circulator (supplied by installer) for each zone capable of delivering the proper flow and head as shown.

Expansion Tank required

1. Provide a system expansion tank following the guidelines beginning on **page 59**.
2. **DO NOT** use a closed-type tank if connecting to a water heater that is equipped with an automatic vent.

System setup and settings

1. Hi-temp emitters may be baseboards, radiators, fan coils, or heat exchangers.
2. Add a mixing device (**Figure 70**, item 30) to help ensure supply water temperature will not exceed the maximum allowable for the radiant system.
3. Heating zone supply water temperature settings should be selected for the hi-temp zones. The mixing device regulates supply temperature to the lower-temp zones.

Domestic Hot Water (DHW) tank, if used

1. DHW direct connection - Pipe from the near-boiler piping to the DHW tank's boiler connections as shown. Ensure Boiler Pump is configured to off for DHW Priority.
2. DHW as zone - A DHW tank can be connected as a zone if a DHW tank is **NOT** already connected to the boiler. See notices on **page 192** to ensure compliance with the 2007 Energy Act. Configure Boiler Pump to run during DHW demands and change TARGET MOD SENSOR to System Supply.
3. DHW Priority operation - Using Priority 1 for DHW (default) will turn off lower priorities during DHW calls. The MAX ON TIME setting can be adjusted to limit how long this occurs. Use Priority 2 or 3 for DHW if DHW priority is not desired.

NOTICE

Overriding the Outdoor Reset function by setting control to DHW mode when system is intended for space heating may violate **Section 303 of the 2007 Energy Act.** See **page 192** for compliance information and exemptions.

Figure 70 Circulator zoning with high- and low-temperature heating zones

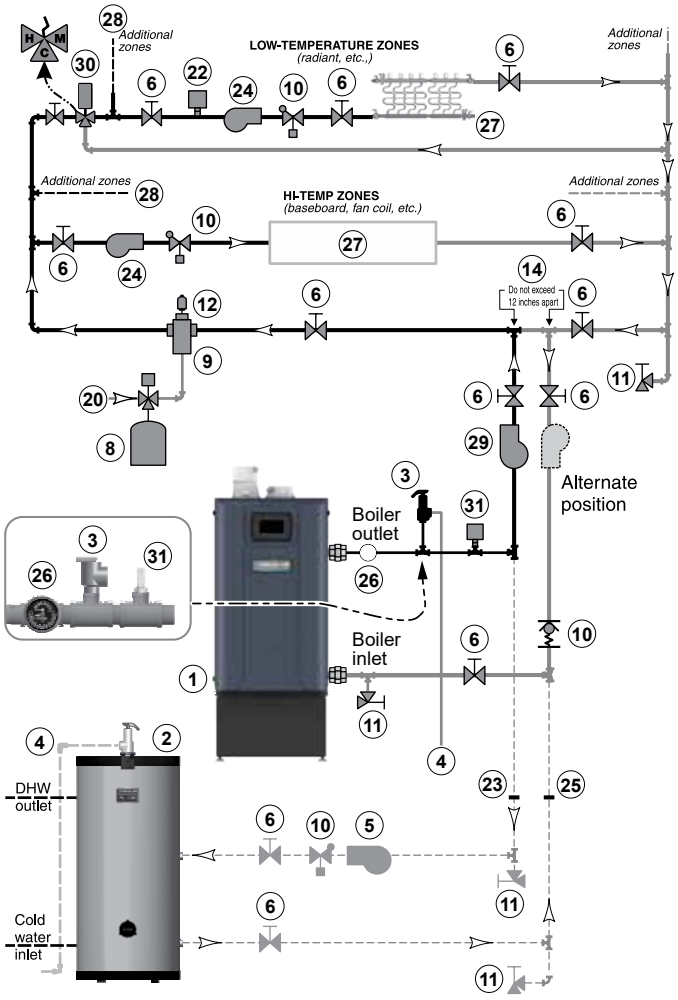

Controlling the Circulators

1. The control can control up to four assignable 120V Outputs and one 120V Boiler Circulator. Refer to field Wiring, beginning on **page 74**, for instructions on wiring to circulators.
2. The factory default settings are not configured. Each input correlates to its respective circulator output. For DHW Priority applications, wire aquastat to Input 1 and assign to Priority 1. See Field wiring instructions, beginning on **page 74**, for details.

NOTICE

Connect zone valve end switches to Priority 2 input. Connect system circulator to Circ. 2 output.

CAUTION

Use isolation relays if connecting 3-wire zone valve end switches to the input.

Install Condensate Line (Evg 110/155)

Prepare Condensate Trap Assembly

1. Remove the condensate trap kit from the accessories bag.
2. See **Figure 71**. The left image shows the complete condensate trap kit.
3. Remove the flexible drain tube nut, item 2.
4. Push the flexible tube gasket ring (item 3) onto the end of the flexible tube (item 1) as shown in **Figure 71**. The tube should extend through the gasket about ¼ inch.
5. Insert the flexible tube and gasket into the drain fitting. When in position, the offset edge of the gasket ring will rest on the shoulder of the drain fitting as shown in **Figure 71**, detail 6.
6. Secure the flexible tube in place by screwing on the nut, item 2. Finger tighten securely.

Install the Condensate Trap Assembly

1. Remove floor stand front access panel (if installed as a floor standing boiler), see **Figure 72**.
2. Insert the condensate trap ball, **Figure 71**, item 5 into the trap body (item 4).

WARNING

The condensate trap ball MUST be in place in the condensate trap assembly to prevent possible flue gas leakage through the condensate drain system.

3. Loosen the top nut on the trap body.
4. Slide the trap assembly onto the boiler condensate outlet. Firmly hand tighten the upper nut to secure the condensate trap in place.
5. Place the condensate bracket around the top nut and align the slot and hole with the holes in the bottom plate. Push the slotted rivet nuts through the bracket hole and slot into the holes in the cabinet.
6. If floor standing boiler, route hose through slot in side of boiler stand.

Condensate Drain System

7. **Install condensate drain by connecting tubing or PVC pipe to the flexible drain line. Run the drain tubing or piping to a floor drain or condensate pump**. The flexible drain line will fit in a ¾" PVC coupling. Run minimum ½" PVC for the piping to drain or condensate pump.

NOTICE

Use materials approved by the authority having jurisdiction. In the absence of other authority, PVC and CPVC pipe must comply with ASTM D1785, F441 or D2665. Cement and primer must comply with ASTM D2564 or F493. For Canada, use CSA or ULC certified PVC or CPVC pipe, fittings and cement.

8. Select a condensate pump (if used) that is approved for use with condensing boilers and furnaces. The pump should have an overflow switch to prevent property damage from condensate spillage. Refer to **Figure 76, page 71**.
9. When sizing condensate pumps, make sure to include the total load of all appliances connected to it.

CAUTION

The condensate line must remain unobstructed, allowing free flow of condensate. If condensate is allowed to freeze in the line or if the line is obstructed in any other manor, condensate can exit from the boiler tee, resulting in potential water damage to property.

NOTICE

Condensate from the boiler will be slightly acidic (typically with a pH from 3.2 to 4.5). Install a neutralizing filter when draining into metal pipe and if required by local codes. See **"Accessory Parts"** for the Weil-McLain kit.

WARNING

The condensate trap and bracket must be in place during all operation. Make sure the trap is securely attached to the condensate outlet and that the condensate discharge line is in good condition and installed per this manual. Failure to comply could result in severe personal injury, death or substantial property damage.

Figure 71 Condensate trap assembly

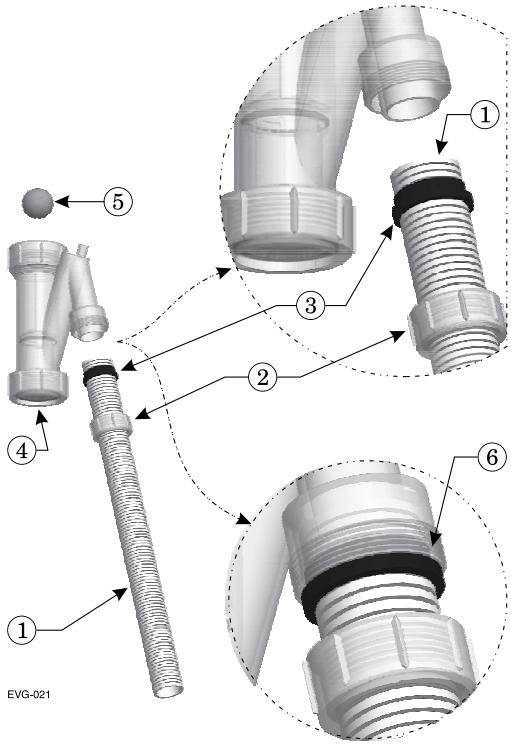

Figure 72 Condensate trap connection (front access panel removed)

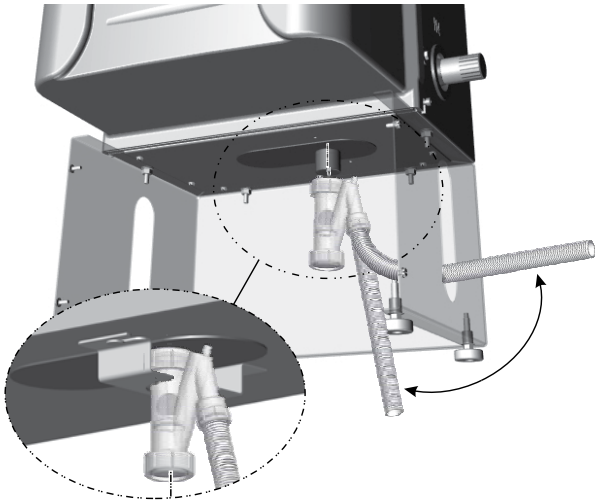

Install Condensate Line (EVG 220/299/300/399)

Prepare Condensate Fittings

1. Remove PVC fittings and gasket from the accessories bag.
2. Deburr and chamfer outside and inside of ½" PVC nipple to ensure even cement distribution when joining.
3. Clean nipple ends and all fittings. Dry thoroughly.
4. For each joint in the condensate line, apply the following. Assemble parts ONLY in the order given (See **Figure 73**).
   a. Apply primer liberally to both joint surfaces - pipe end and fitting socket.
   b. While primer is still damp, lightly apply approved cement to both surfaces in a uniform coating.
   c. Apply a second coat of cement to both surfaces. Avoid using too much cement on sockets to prevent cement buildup inside.
   d. With cement still wet, insert pipe into fitting, twisting ¼ turn. Make sure pipe is fully inserted.
   e. Wipe excess cement from joint. Check joint to be sure a smooth bead of cement shows around the entire joint.
5. Assemble the ½" PVC nipple to the PVC reducing elbow as shown.
6. Allow joint to dry completely.
7. Then slide gasket over nipple as shown in **Figure 74**.
8. Slide nipple through jacket condensate line hole to position as shown in **Figure 74**.
9. Cement the ½" tee to the protruding ½" nipple. Be sure both nipple and reducing elbow finish upright.

⚠CAUTION

Firmly press the reducing elbow and the tee together while the cement sets to ensure the gasket is securely compressed. The gasket ensures the jacket enclosure is airtight at this location.

Connect Condensate Trap Line and Fittings

1. Remove condensate trap line from bag.
2. Connecting condensate line assembly **Figure 75**:
   a. Place a hose clamp over the end of the condensate line.
   b. Then slide the end of the trap line over the heat exchanger condensate connection.
   c. Tighten the hose clamp to secure the trap line.
   d. See **"Fill Condensate Trap with Water" on page 120** for proper instructions on priming the condensate trap, if applicable at the time.
   e. Place a hose clamp over the other end of the condensate trap line.
   f. Slide the trap line over the reducing elbow and secure with the hose clamp.

⚠WARNING

Nothing is to be added to top of this tee, **Figure 74**.

Figure 73 Condensate trap assembly

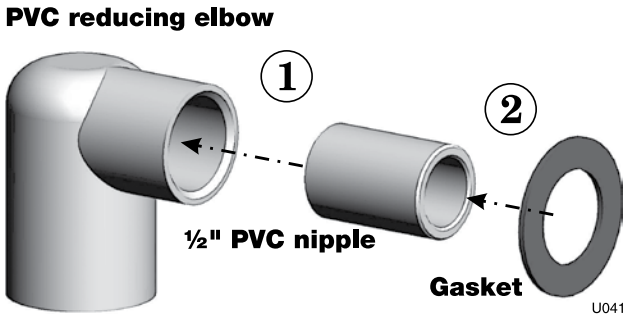

Figure 74 Condensate trap assembled into jacket

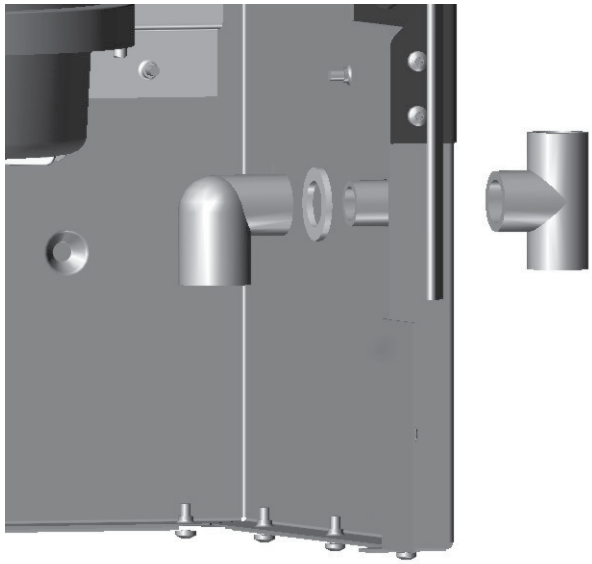

Figure 75 Condensate drain line connections

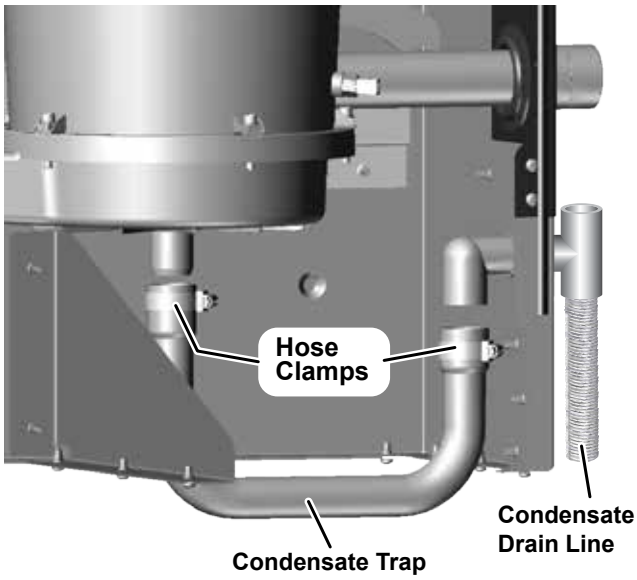

Install Condensate Line (Evg 220/299/300/399) (continued)

Condensate Drain Tubing

1. Connect condensate drain tubing to the ½" PVC tee and run to floor drain or condensate pump (see **Figure 77**). Use ½" PVC or CPVC pipe; or 5/8" I. D. tubing (Installer supplied).

NOTICE

Use materials approved by the authority having jurisdiction. In the absence of other authority, PVC and CPVC pipe must comply with ASTM D1785, F441 or D2665. Cement and primer must comply with ASTM D2564, F656, or F493. For Canada, use CSA or ULC certified PVC or CPVC pipe, fittings and cement.

2. Leave the top of the ½" tee OPEN. This is needed as a vacuum break. Do not install any pipe or fitting into top of tee.

WARNING

Nothing is to be added to top of this tee.

3. When installing a condensate pump, select one approved for use with condensing boilers and furnaces. The pump should have an overflow switch to prevent property damage from condensate spillage. See **Figure 76, page 71** for required flow capacity.
4. When sizing condensate pumps, make sure to include the total load of all Evergreen® Pro boilers connected to it.

CAUTION

The condensate line must remain unobstructed, allowing free flow of condensate. If condensate is allowed to freeze in the line or if the line is obstructed in any other manor, condensate can exit from the boiler tee, resulting in potential water damage to property.

NOTICE

Condensate from the Evergreen® Pro boiler will be slightly acidic (typically with a pH from 3.2 to 4.5). Install a neutralizing filter if required by local codes. See **"Accessory Parts"** at the end of this manual for the Weil-McLain kit.

Figure 76 Suggested condensate pump capacity, GPH

Boiler	Minimum recommended condensate pump capacity, per boiler, GPH
EVG 110	3
EVG 155	4
EVG 220	6
EVG 299/300	8
EVG 399	10

Figure 77 Condensate pump (by others), typical

2

This page intentionally left blank.

Section 3
Electrical

Field Wiring

WARNING

ELECTRICAL SHOCK HAZARD – For your safety, turn off electrical power supply at service entrance panel before making any electrical connections to avoid possible electric shock hazard. Failure to do so can cause severe personal injury or death.

NOTICE

- The installation must comply with: National Electrical Code and any other national, state, provincial or local codes or regulations. In Canada, CSA C22.1 Canadian Electrical Code Part 1, and any local codes.
- Wiring must be NEC Class 1. If original wiring as supplied with boiler must be replaced, use only type 105 °C wire or equivalent. Boiler must be electrically grounded as required by National Electrical Code ANSI/NFPA 70 – latest edition, and/or the Canadian Electrical Code Part I, CSA C22.1, Electrical Code.
- The boiler when installed, must be electrically bonded to ground in accordance with the requirements of the authority having jurisdiction or, in the absence of such requirements, with the National Electrical Code, ANSI/NFPA 70 – latest edition, and/or the Canadian Electrical Code Part I, CSA C22.1, Electrical Code.

Field Wiring (see wiring diagram, Figure 80, page 86)

WARNING

ELECTRICAL SHOCK HAZARD - For your safety, turn off electrical power supply at service entrance panel before making any electrical connections to avoid possible electric shock hazard. Failure to do so can cause severe personal injury or death.

NOTICE

The installation must comply with National Electrical Code and any other national, state, provincial or local codes or regulations. In Canada, CSA C22.1 Canadian Electrical Code Part 1, and any local codes.

Wiring must be N.E.C. Class 1. If original wiring as supplied with boiler must be replaced, use only type 105 °C wire or equivalent. Boiler must be electrically grounded as required by National Electrical Code ANSI/NFPA 70 – latest edition.

Do not use 24V from transformer to power any external devices that are not listed in this manual.

Wire Entrances

EVG 110/155

- Six knockouts are provided in the top of the cabinet for line voltage wiring.
- Three knockouts are provided on the right side of the cabinet for low voltage and communication wiring.
- See Figure 78 for locations and functions.

EVG 220/299/300/399

- Eight knockouts are provided in the top of the cabinet for line and voltage wiring.
- Three knockouts are provided on the right side of the cabinet for low voltage and communication wiring.
- See Figure 78 for locations and functions.

WARNING

- **Installer MUST use a strain relief** through jacket knockouts. Failure to do so can cause severe personal injury, death or substantial property damage.
- **Installer MUST SEAL** all electrical entrances using a sealed strain relief or a strain relief sealed with duct seal putty or silicone. Sealing the entrances prevents water from entering the electrical enclosure. Failure to seal entrances could result in severe personal injury, death or substantial property damage.

Wiring Overview

See details on the following pages for the wiring connections outlined below:

Required Wiring Connections

- 120VAC power to boiler; 120VAC power out to boiler circulator; system supply and return temperature sensors; and outdoor temperature sensor (unless exempt as described in this manual).
- LWCO sensor (provided with boiler).

Connections as Needed by Systems

- Thermostat, end switch or other inputs for call for heat.
- System zone circulators, valves, relays, etc.
- System circulator, when required.

Optional Wiring Connections

- External limits; proof-of-closure interlocks (combustion air damper, flow switch, etc.); 0–10VDC for target or modulation control; remote alarm; additional heat demand contact; and communication cables for boiler networking and/or building management system interface (MODBUS).Multiple boiler communication wiring.

1. Wires should be shielded thermostat wires, or equivalent.
2. Route communication wires through right knockout to communication board on control bracket.
3. Provide strain relief and seal at cabinet entry.

Wire Routing in the Cabinet

1. Line voltage: (120 Vac in, circulator outputs)
   a. Line voltage should be wired from the top electrical knockouts going into the control tray.
   b. Strip end of wire no more than 1/4" to avoid exposing uninsulated wire.
   c. (110/155) It is recommended to install an On/Off service switch in a junction box mounted near the boiler. Installation must meet all National and local electrical codes.
2. Low voltage:
   a. Mount low voltage wire grommet(s) to desired low voltage knockout(s).
   b. Thermostat, aquastat, limit devices, system sensors, 0-10 Vdc input/output, and outdoor temperature sensor wire pairs should be routed through the grommets and knockouts.
   c. Wires should be connected directly into the corresponding terminal block.
   d. Bundle all wires together with provided wire ties. Loop wire tie with bundled wires through wire tie mount and secure mount to control bracket in bottom right mounting hole.
   e. After wires and connectors are attached to the control terminal blocks, make sure wires are properly sealed in the cabinet electrical entrances.

Field Wiring (continued)

Figure 78 Field wiring overview (see Figure 79, page 84 and Figure 80, page 86 for detailed schematic and ladder wiring diagrams)

EVG 220-399

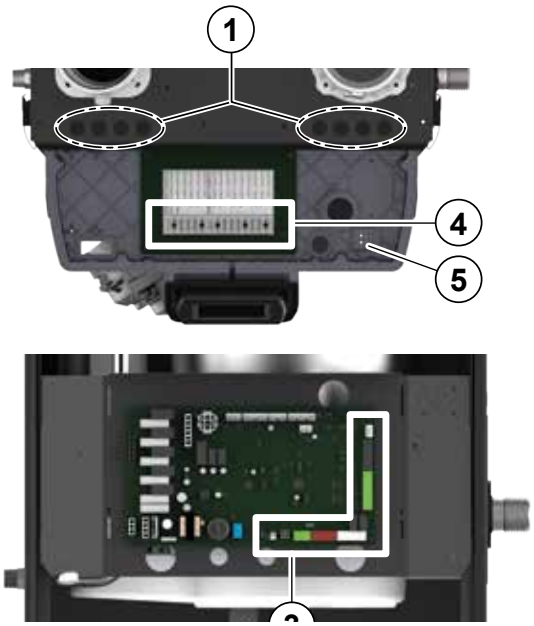

EVG 110/155

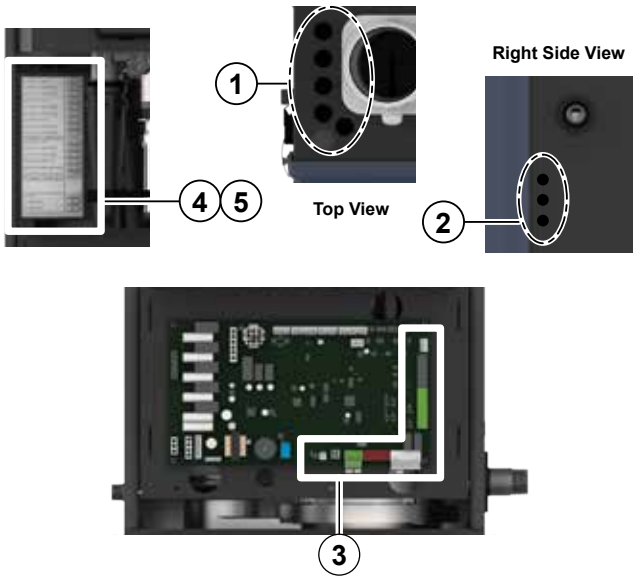

EVG 110/155

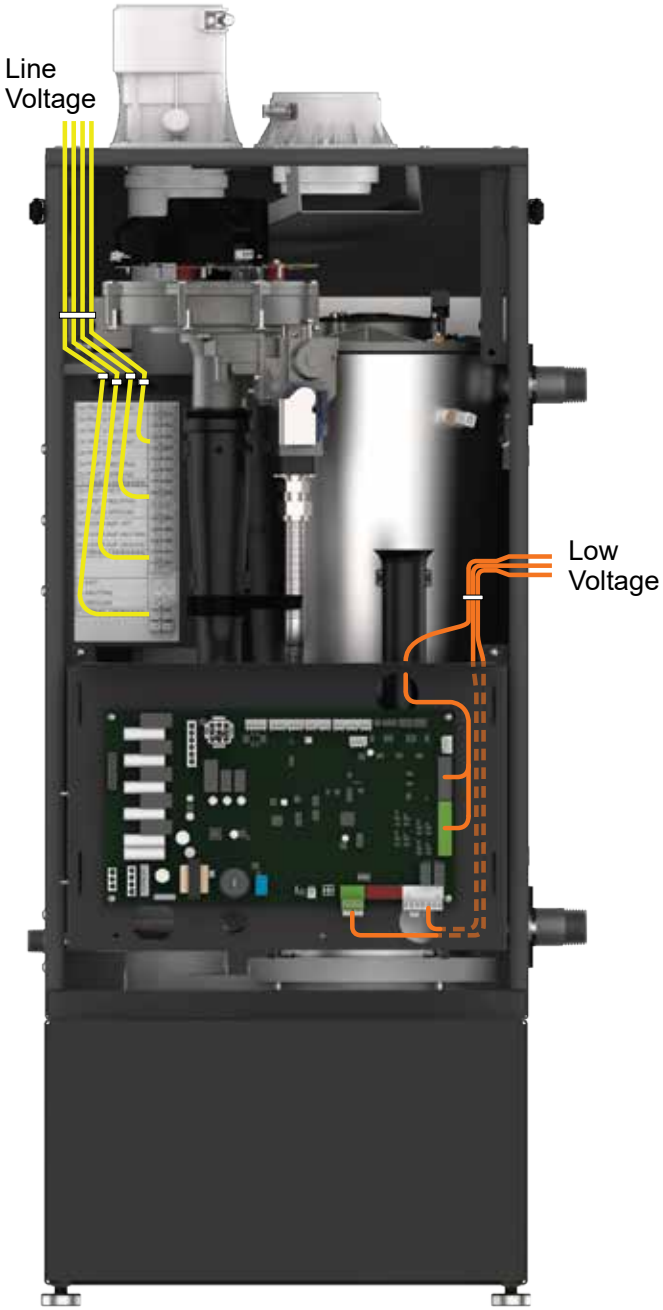

1. High voltage Field Wiring knockouts.
2. Low voltage Field Wiring knockouts.
3. Low voltage Field Wiring.
4. 120VAC terminal strip (T1) for boiler power supply (15-amp breaker unless larger capacity is required for outputs connected on terminal strip.
5. 120VAC terminal strip for outputs to circulators or auxiliary devices.

Field Wiring (see wiring diagram, Figure 79, page 84) (continued)

A. 120VAC Power Supply – *REQUIRED*

Terminal Strip T1

1. Provide and install a properly-sized, fused disconnect or service switch as required by applicable codes. (15-amp for most cases.)
2. For Evergreen® Pro 220-399 models, use table at right to determine total load.
   For Evergreen® Pro 110/155 models, max amp draw is less than 12 amps.
3. Connect properly sized 120VAC power wiring to Evergreen® Pro boiler line voltage terminal block T1 as shown at right.
4. If possible, provide a surge suppressor in the supply power line. This will reduce the possibilities of control damage due to line surges.
5. Must wire ground to this terminal to provide boiler grounding. Failure to properly ground the boiler can lead to abnormal operation and potential hazards.

Determine total load (220-399 models only)	
Boiler & boiler pump (combined load)	5.80 amps
Output 1 . . . . . (2.0 amps max)	____ amps
Output 2 . . . . . (2.0 amps max)	____ amps
Output 3 . . . . . (2.0 amps max)	____ amps
Output 4 . . . . . (2.0 amps max)	____ amps
Boiler Receptacle 2 amps Max	____ amps
TOTAL	_____

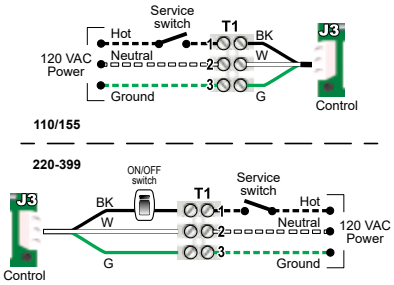

See Figure 79, page 84 for details

B. Receptacle

Located on boiler right side panel

1. Electrical rating is 2.0 amps max at 120VAC.
2. This receptacle can be used to plug in a condensate pump.

Field Wiring (see wiring diagram, Figure 79, page 84) (continued)

C. 120VAC Outputs 1, 2, 3, 4 & 5 (Boiler Circulator) – *As needed for systems*

Terminal Strip T2 & T3

1. Output 1: T3: 7,8,9
2. Output 2: T3: 4,5,6
3. Output 3: T3: 1,2,3
4. Output 4: T2: 4,5,6
5. Boiler Circulator: T2: 1,2,3
6. Maximum output (1-4) load: 2.0A Max, Boiler Circulator 2.2A Max (use relay if circulator load is higher). See WARNING below.
7. These four outputs (Output 1, Output 2, Output 3, and Output 4) can provide 120VAC to the following listed below:
   - A zone circulator.
   - A system circulator.
   - A DHW circulator (used to circulate through an indirect tank).
   - An Auxiliary Item that may be energized during an input call, such as an air damper.
8. When using inputs/outputs for heat/Indirect DHW demands, each input (Input 1, Input 2, Input 3, and Input 4) controls its respective 120VAC output (Output 1, Output 2, Output 3, and Output 4). Outputs are energized only when BOTH conditions below are met:
   a. The corresponding input indicates a call for heat/ Indirect DHW (i.e. contact closure).
   b. The PRIORITY assigned to the Input/Output pair is ACTIVE (i.e. the zone may be calling but the pump won't activate unless the boiler is currently running on that system/priority).

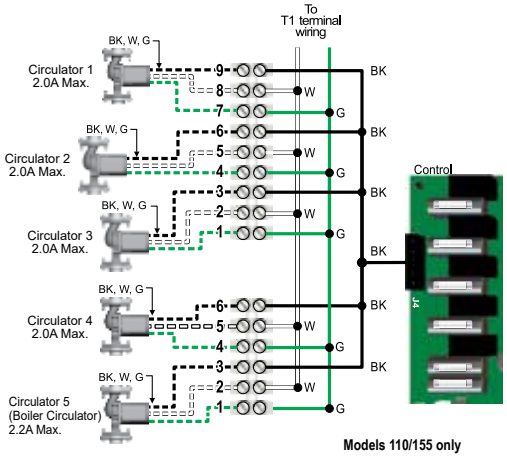

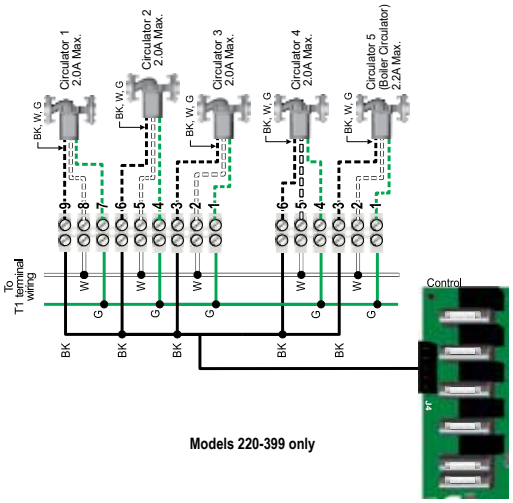

See Figure 79, page 84 for details.

WARNING

Output circuits are 120VAC. If an output is to operate a low voltage circuit or must be an isolated contact, use an isolation relay.

WARNING

CIRCULATOR POWER - The maximum allowable current for each circulator is 2.0 amps for circulators 1-4, and 2.2 for boiler circulator (Circ 5) at 120VAC. For circulators with higher amp ratings, install a circulator relay or starter. Connect only the 120VAC coil to the circulator terminals.

Field Wiring (see wiring diagram, Figure 79, page 84) (continued)

D. Inputs 1, 2, 3 and 4 (demands) – *As needed for systems*

Connector J17 (Input 1, 2, &3) & Connector J16 (Input 4, 0–10VDC Input)

1. Input 1 – Connector J17 – 1, 2 & 3 (common)
2. Input 2 – Connector J17 – 4, 5 & 6 (common)
3. Input 3 – Connector J17 – 7, 8 & 9 (common)
4. Input 4 – Connector J16 – 1, 2 & 3 (common)
5. These four (4) inputs on each boiler can indicate a call for heat to the control by means of a dry contact closure (thermostat, aquastat, or switch). (See right and Figure 79, page 84).
6. The control provides inputs for up to four (4) demands and up to three (3) systems (priorities).
7. **For Priority Indirect DHW Application**:
8. The DHW aquastat can be connected to any one of the four (4) input/output pairs. The selected input should be assigned to PRIORITY 1 during the WIZARD setup or manually in the System Settings menu.
9. The default control setting uses each input (INPUT 1, INPUT 2, INPUT 3 and INPUT 4) to control its respective 120VAC output (OUTPUT 1, OUTPUT 2, OUTPUT 3 and OUTPUT 4).

NOTICE

Use of 0–10VDC input for modulation disables Input 2 T/T input from creating calls for heat. See page 82 for instructions.

An input can be assigned to an AUX PUMP/OUTPUT function to operate a system pump or interlock with a combustion air damper. Inputs assigned for this function cannot be used for heat demand operation. See page 114 for more information on the setup and selection of operating conditions.

TT or end switch inputs
(INPUTS 1, 2, 3 and 4)
With External 0-10VDC inputs

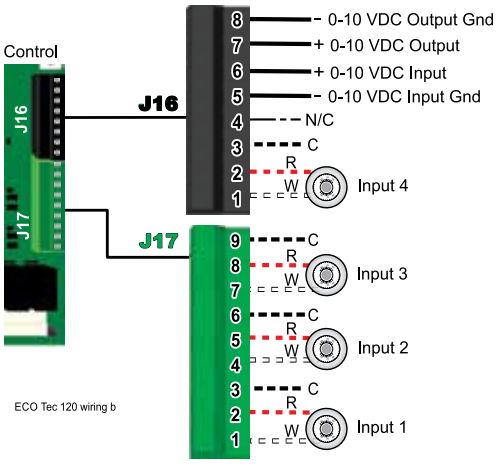

See Figure 79, page 84 for details.

WARNING

Thermostats - **DO NOT** supply 24-volt power to the thermostat circuits (Input 1, Input 2, Input 3 and Input 4 in Figure 79, page 84) or attempt to supply 24 volts for any other application.

For thermostats that require a continuous 24-volt power source, connect the common wire ("C") (see Figure 79, page 84). Do NOT exceed 120mA total amp draw at 24VAC per thermostat.

Zone valves - If using 3-wire zone valves, use relays to provide dry contacts to the Control thermostat connections. The zone valve end switches of 3-wire valves carry 24VAC from the valve.

Thermostat anticipator setting - 0.1 amps.

Field Wiring (see wiring diagram, Figure 79, page 84) (continued)

E. System supply and return temperature sensors – *Recommended when using primary secondary piping design. Connector J19*

1. It is recommended to use two (2) strap-on temperature sensors. Attach one to the system supply piping and the other to the system return piping. For piping larger than 5 inch diameter or nonmetallic piping, using immersion sensors will provide faster response.
2. Locate the supply sensor at least six pipe diameters, but no further than 3 feet, downstream from the boiler connection to the main to ensure adequate mixing.
3. Return sensor – wire between J19 #1 and #2.
4. Supply sensor – wire between J19 #3 and #4.
5. Thermostat wire can be used to connect these sensors.
6. The Control compares the system return temperature with the system supply temperature.

NOTICE

It is recommended for all primary/secondary heating systems shown in this manual that the System Supply and Return sensors to be installed for proper control function. System may not properly provide desired temperature if sensors are not installed according to these instructions.

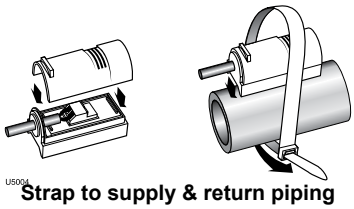

Strap to supply & return piping

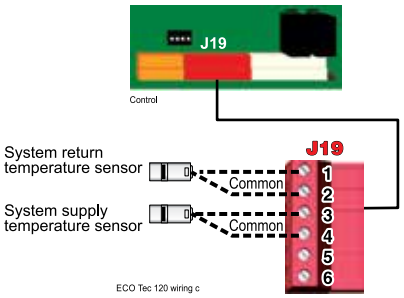

See Figure 79, page 84 for details

F. Outdoor temperature sensor – *REQUIRED unless exempted*

Connector J19

1. The control provides programmable options if using an outdoor temperature sensor. This sensor is supplied with the boiler.
2. **The outdoor sensor must be installed unless specifically exempted in the Energy Act statement on page 192.**
3. Mount the outdoor sensor on an exterior wall, shielded from direct sunlight or flow of heat or cooling from other sources.
4. The wire outlet on the sensor must be oriented DOWN to prevent water entry.
5. Connect the sensor leads to the terminal shown at right and in the wiring diagrams (see **Figure 79, page 84**). Thermostat wire can be used to connect the sensor.

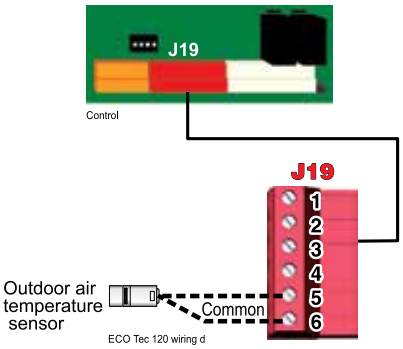

See Figure 79, page 84 for details

G. External limits – *OPTIONAL*

To cause **MANUAL** reset: Connector J20 #1 & #2

The control will require manual reset after circuit is interrupted.

1. Remove factory-installed jumper and connect isolated contacts of external limits across J20 pins 1 and 2 to cause the control to enter manual reset lockout if the limit circuit opens. The limit must close and the control must be manually reset using the procedure given in this manual. See drawing at right and wiring diagram **Figure 79, page 84**.

NOTICE

The control will lockout when a limit in its manual reset circuit opens (J20 pins 1 & 2). The control activates its alarm terminals and shuts the boiler down. An operator (user or technician) must manually reset the control to restart the boiler.

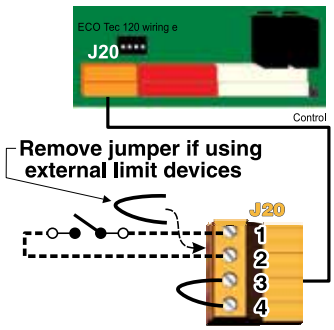

See Figure 79, page 84 for details.

Field Wiring (see wiring diagram, Figure 79, page 84) (continued)

To cause **AUTOMATIC** reset: Connector J20 #3 & #4

The control will reset automatically after circuit is interrupted.

1. Remove factory-installed jumper and connect isolated contacts of external limits across J20 pins 3 and 4 to cause the control to shut down the boiler on limit opening, then automatically restart 150 seconds after the limit closes.
2. See drawing at right and wiring diagram (Figure 79, page 84).

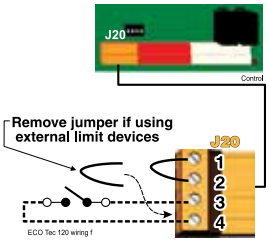

See Figure 79, page 84 for details.

H. Low water cutoff (LWCO) – *Sensor (supplied with boiler) & alternate (installer supplied)*

Connector J21 (optional) & Connector J9 (optional)

1. Install a low water cut-off (optional) (see Figure 13, page 21). (see page 58 for further installation instructions)
2. Connector J9 - An LWCO sensor is supplied with the boiler and is recommended to be installed. Connect this supplied LWCO sensor to connector J9. A jumper is factory installed and must be removed before connecting the LWCO sensor .
3. Connector J21 (optional) wiring Weil-McLain LWCO Kit:
   a. Use the Weil-McLain Low water cut-off kit listed in the back of this manual when an alternate LWCO device is desired. It includes a probe-type low water cut-off and provides a simple harness connection for the wiring.
   b. Connect as shown at bottom center in the control wiring diagram (Figure 79, page 84).
4. Wiring another LWCO - must have isolated contact:
   a. Other low water cut-offs can be used with the Evergreen® Pro only if the device uses an isolated contact for the LWCO function.
   b. Connect as shown at bottom right.

Wiring for LWCO Sensor

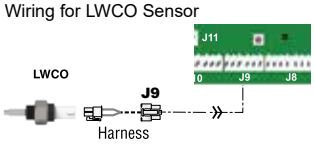

Wiring for Weil-McLain LWCO Kit

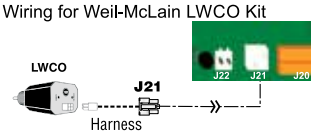

Wiring other isolated contact LWCO

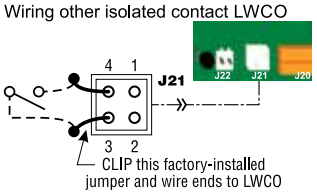

See Figure 79, page 84 for details.

I. Alarm contacts – *OPTIONAL*

Connector J18 #4 & #5

1. The control's alarm dry contact (J18, terminals 4 and 5) closes when the boiler enters manual lockout only.
2. Connect these terminals for remote alarm notification.
3. Contact electrical ratings: 24VAC or less; 0.5 amp or less.

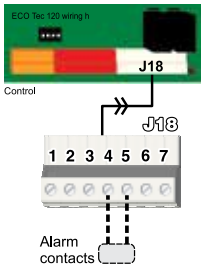

See Figure 79, page 84 for details.

J. Additional heat demand contacts – *OPTIONAL*

Terminal Block J18 #6 & #7

1. The circuit board can be set to activate another heat source using its additional heat demand dry contacts through terminal block J18 pins 6 & 7.
2. Connect these terminals to call for heat from the other heat source.
3. Contact electrical ratings: 24VAC or less; 0.5 amp or less.
4. Set the control to activate the heat demand contacts as needed.
5. For Additional Heat Demand, refer to setup in the control section on page 113 for more information.

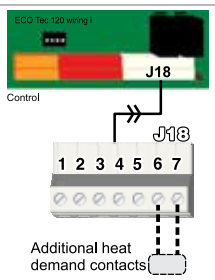

See Figure 79, page 84 for details.

Field Wiring (see wiring diagram, Figure 79, page 84) (continued)

K. Proof of closure *(flow switch and/or CAD)*

Jumper on Connector J18

1. A flow switch or combustion air damper (CAD) interlock can be configured by removing the jumper on connector J18 and wiring components as shown at right and in the wiring diagram (**Figure 79, page 84**).
2. No control settings are required when using a flow switch.
3. Recommended configuration of the control for a CAD interlock:
   a. Assign **INPUT 3** as a **AUX PUMP/OUTPUT** function.
   b. For the **AUX PUMP/OUTPUT** operating mode, select local or **System Damper** for use with CAD Interlock. This ensures the damper will be activated any time the boiler is called on to fire.
   c. **OUTPUT 3** will provide 120VAC to the damper motor. Use an isolation relay if damper motor requires another voltage or more than 2.2 amp if using 120VAC.
   d. For multi-boiler wiring of CAD interlock, wire all Proof of Closure inputs in series with the endpoint devices and each boiler's Closure Switch input.

NOTICE

* The devices used must provide electrically isolated contacts, because the J18 jumper circuit carries 5 VDC.

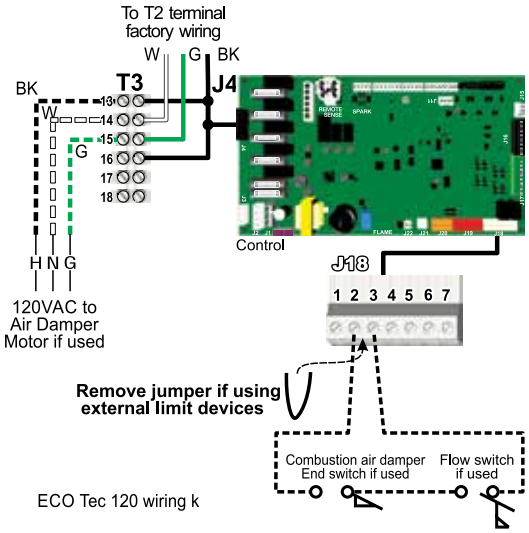

See Figure 79, page 84 for details.

L. 0–10 VDC Remote TARGET input – *OPTIONAL*

Connector J16 #5 & #6

1. See illustration at right and **Figure 79, page 84** (wiring diagram) for details.
2. Remote target using 0–10VDC input requires a 0–10VDC input signal at J16-5/6 as shown at right.
   a. The input positive connection must be at J16 terminal 6 and the common connection at terminal 5.
3. The 0–10VDC signal is used to adjust the supply target temperature, using the TARGET ADJUST setting. Set TARGET ADJUST during the WIZARD or manually in the PRIORITY SETTINGS menu for the desired system/ priority.
   a. Many options are available for configuring the control. The following is a suggested setup that uses factory default settings as much as possible.
   b. Use PRIORITY 1 for the Indirect DHW heating system when used. This priority's default values are set for Indirect DHW, direct-piped to the boiler. Verify that settings are suitable for the application, change if needed.
   c. Use PRIORITY 2 for the heating systems.
   d. The factory default settings for PRIORITY 2 or 3 make either priority a good choice for space heating applications. Set PRIORITY 2/3 values to the following:
      - Set TARGET ADJUST value to 0–10V.
      - Set VOLTS FOR MAX TARGET at the voltage that will call for the highest target temperature. Set MAX TARGET TEMP at this temperature.
      - Set VOLTS FOR MIN TARGET at the voltage that will call for the lowest target temperature. Set MIN TARGET TEMP at this temperature.
      - For voltages between VOLTS FOR MAX and VOLTS FOR MIN, the target temperature will range proportionately between MAX TARGET TEMP and MIN TARGET TEMP.

NOTE: The 0–10VDC signal replaces the Outdoor Temp sensor as the target temperature modifier (TARGET ADJUST setting). The control does not control target.

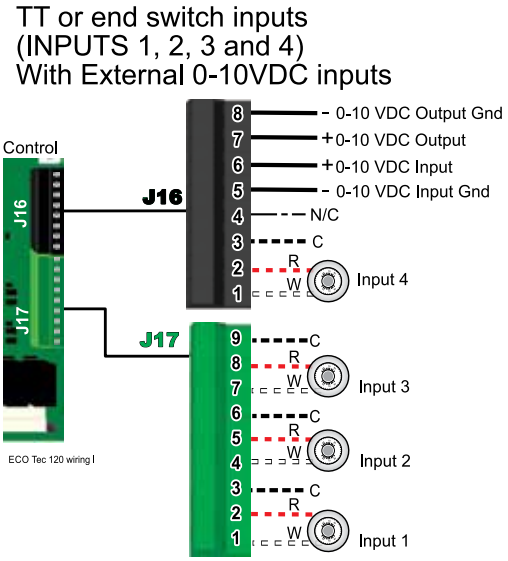

See Figure 79, page 84 for details.

Field Wiring (see wiring diagram, Figure 79, page 84) (continued)

M. 0–10 VDC Remote MODULATION input – *OPTIONAL*

Connector J16 #5 & #6

1. See illustration at right and **Figure 79, page 84** for details.
2. This illustration also shows how to connect TT or end switch contacts at INPUT 1, INPUT 3 and INPUT 4 for other uses.
3. Note that using 0–10VDC input replaces INPUT 2 for generating a heat demand. Do NOT wire any input to INPUT 2 as shown at right.
4. Remote modulation requires a 0–10VDC input signal at J16-5/6 as shown.
   a. The 0–10VDC input positive connection must be at terminal 6 and common connection at terminal 5.
5. Control setup:
   a. In the System Settings menu, select INPUT 2 and change SOURCE to 0-10v. This must be done after the Wizard is complete. See page 121 for System Settings menu information.
6. Operation:
   a. The boiler comes on at 0.9VDC and turns off at 0.5VDC. 1 VDC = 10% input. 10 VDC = 100% input. These voltage settings are not adjustable.
   b. OUTPUT 2 (120VAC) is activated and deactivated as the heat demand is turned on and off.

NOTE: The control can be configured to use either 0–10VDC for target operation (see previous section) or modulation, **but not both**.

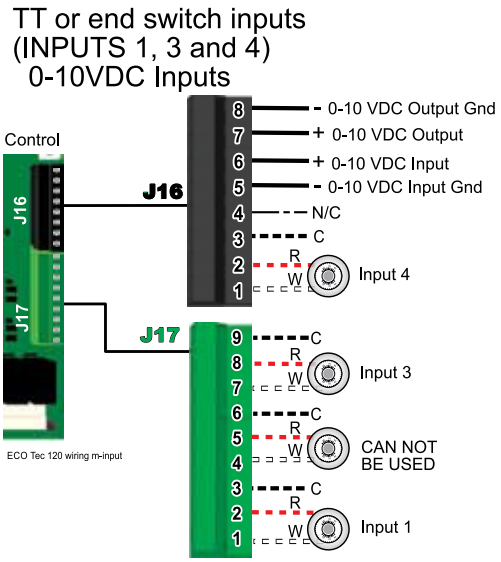

See Figure 79, page 84 for details.

N. 0–10 VDC Output

Connector J16 #7 & #8

1. Control setup – lead/lag:
   a. 0–10 Vdc Output functionality allows classic lead/lag system operation, and allows for cooperation with other heat sources that utilize 0-10 Vdc inputs as a source.
   b. Adjust MAX RATE VOLTS to desired maximum voltage output. Adjust MIN RATE VOLTS to desired minimum voltage output.
2. Operation – lead/lag:
   a. The 0–10 Vdc Output only activates when AHD is set to be used, a call for heat that uses AHD is active and Temp Dependent is set to Yes. Valid systems sensors must be present.
   b. The 0-10 Vdc Output will follow the requested modulation rate, with 10% = Min Rate Volts, and 100% = Max Rate Volts. Voltages between are scaled accordingly.
3. Control Setup - Variable Speed Boiler Pump
   a. 0-10 Vdc Output functionality allows for control of a variable speed boiler pump.
   b. Connect the output to the 0-10 Vdc input of the pump.
   c. For setup and tuning of variable speed boiler pump parameters, refer to **page 108**.
4. Operation - Variable Speed Boiler Pump
   a. VARIABLE SPEED MAX RATE VOLTS is desired voltage delivered to the pump when at High Fire.
   b. VARIABLE SPEED MIN RATE VOLTS is desired voltage delivered to the pump when at Low Fire.
   c. VOLTS WHEN BURNER OFF is desired voltage delivered to the pump when the burner is not active.
   d. When the burner is active, the voltage output scales based on the boiler rate and the constraints of VARIABLE SPEED MIN/MAX RATE VOLTS.

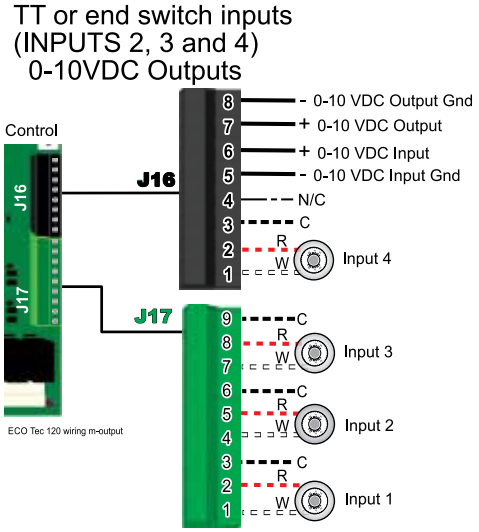

See Figure 79, page 84 for details.

Field Wiring (see wiring diagram, Figure 79, page 84) (continued)

O. Multiple Boiler and the Modbus Connection

Connector J12

1. The boiler control is capable of multiple boiler communication and can control up to eight (8) Evergreen® Pro, Unity2™ or Unity™ boilers in one installation.
2. See Advanced Manual for further details.

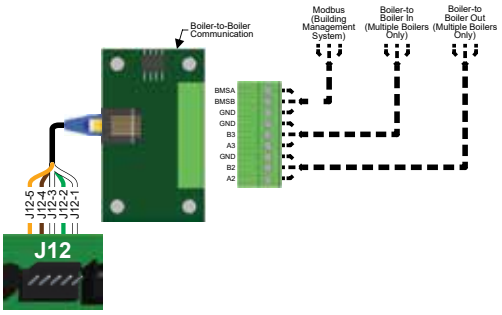

P. Touch screen display connection

Connector J13 or J14

1. The electronic color touch screen display is factory wired to the control and is connected to the J13 or J14 connector.
2. The Display harness is wired to a spring terminal on the mounting bracket. The wires are as follows: J14 is used as the example. J13 uses the same wiring pin out on the control board.
   a. J14-1 White to A+
   b. J14-2 Green to B-
   c. J14-3 Black to C
   d. J14-4 Red to R

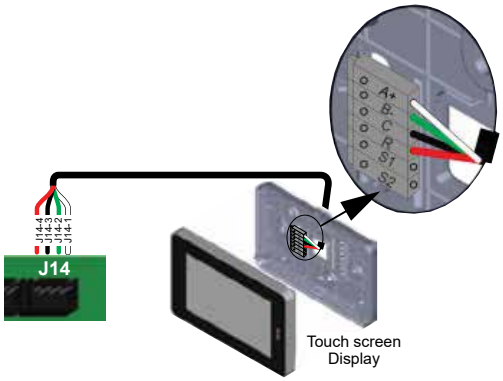

Assembled From tested components Complete system not tested

- This device complies with Part 15 of the FCC Rules. Operation is subject to the following two conditions: (1) this device may not cause harmful interference, and (2) this device must accept any interference received, including interference that may cause undesired operation.

Wiring Diagram - Schematic

Figure 79 Schematic wiring diagram (see **Figure 80, page 86** for legend and notes)

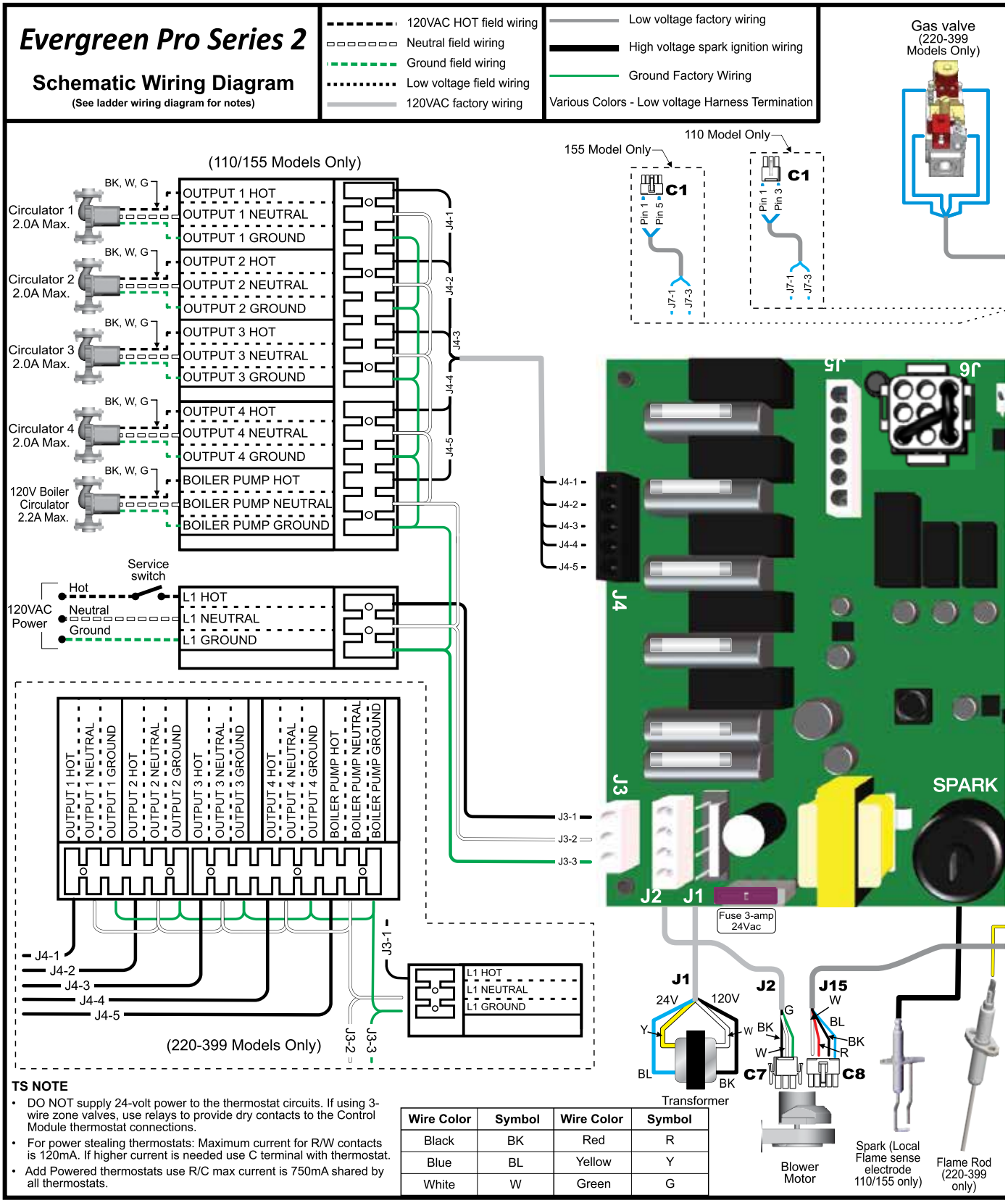

TS NOTE

- DO NOT supply 24-volt power to the thermostat circuits. If using 3-wire zone valves, use relays to provide dry contacts to the Control Module thermostat connections.
- For power stealing thermostats: Maximum current for R/W contacts is 120mA. If higher current is needed use C terminal with thermostat.
- Add Powered thermostats use R/C max current is 750mA shared by all thermostats.

Wire Color	Symbol	Wire Color	Symbol
Black	BK	Red	R
Blue	BL	Yellow	Y
White	W	Green	G

Wiring Diagram - Schematic (continued)

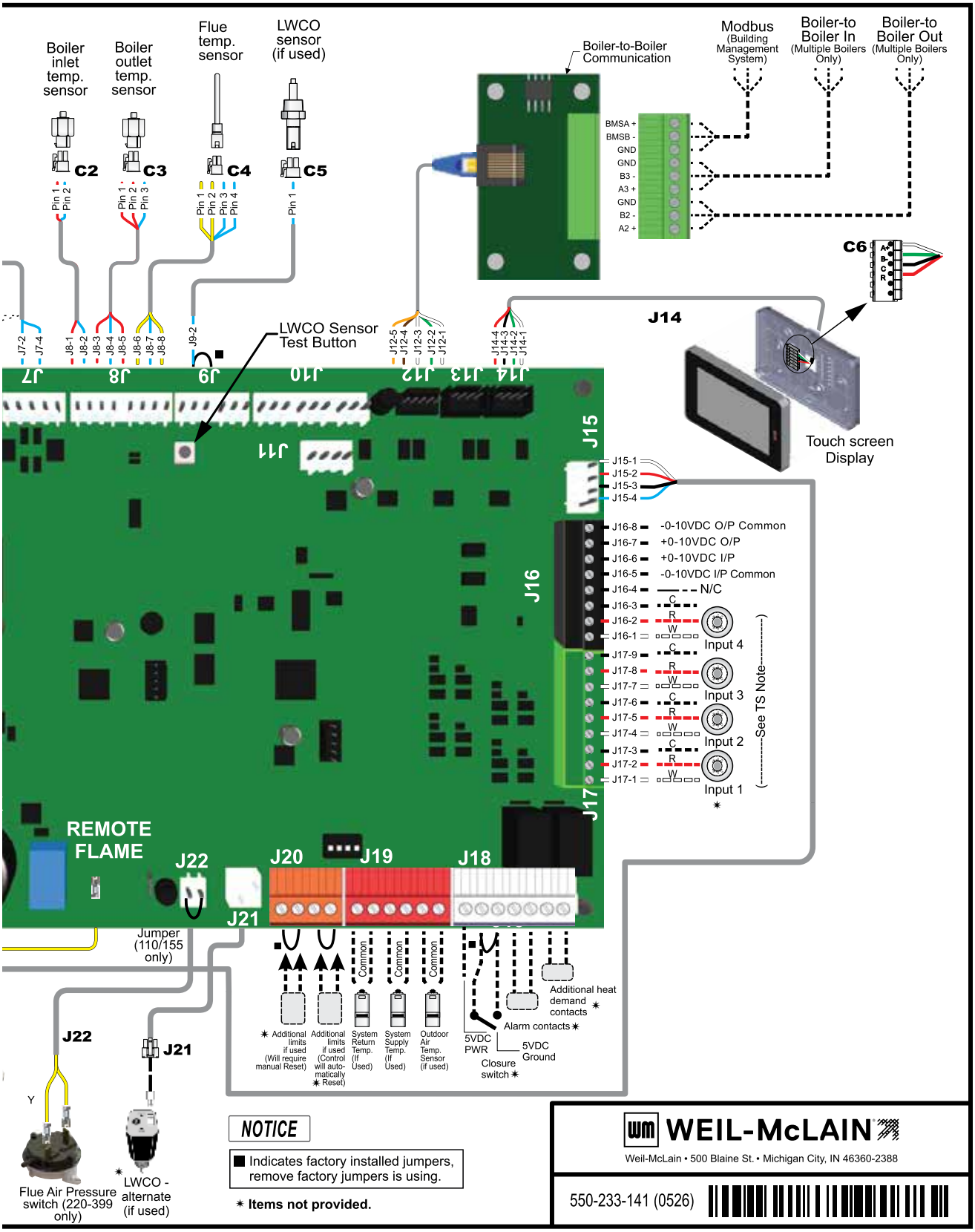

Wiring Diagram - Ladder

Figure 80 Ladder wiring diagram (see **Figure 79, page 84** for schematic wiring diagram)

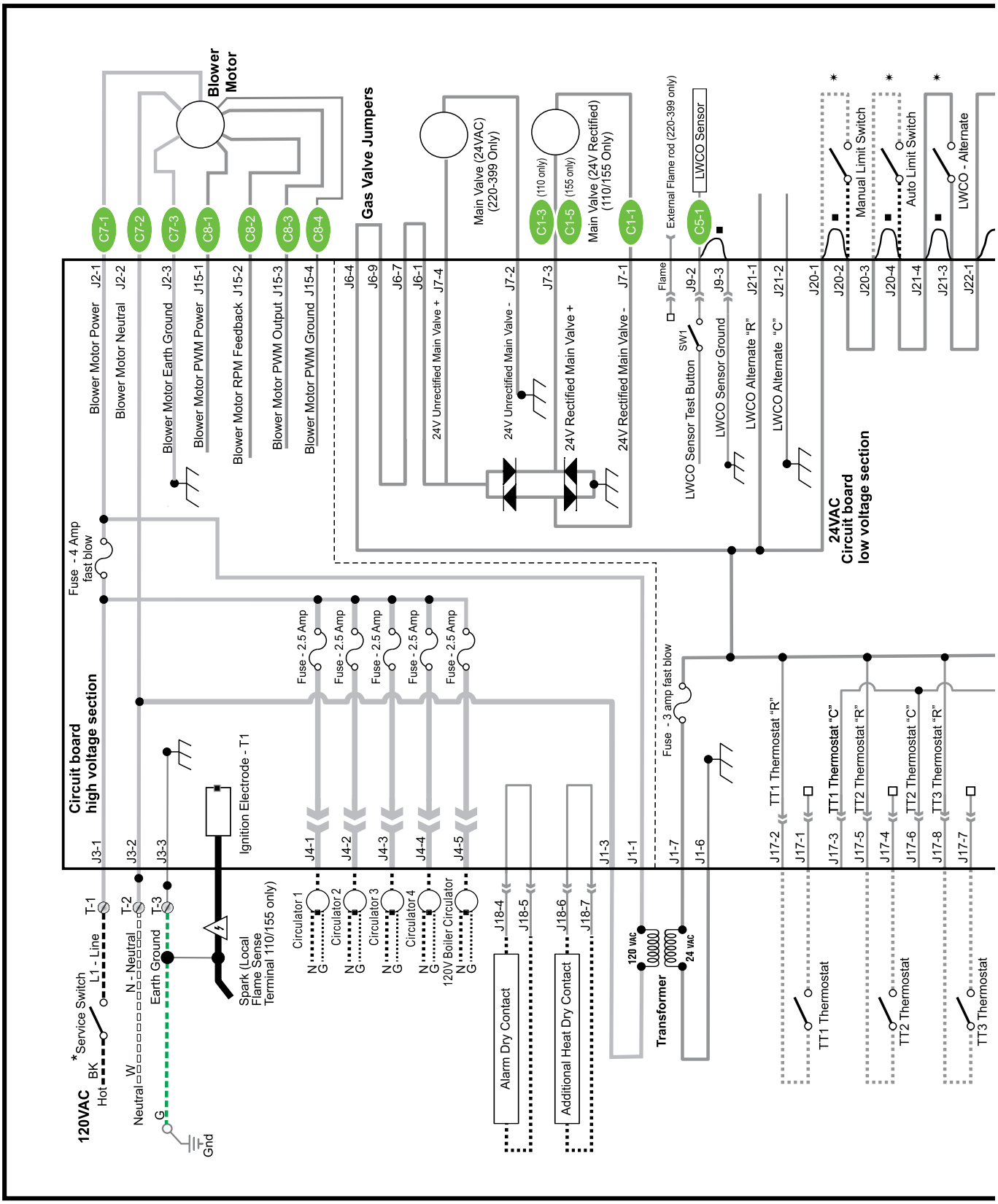

Wiring Diagram - Ladder (continued)

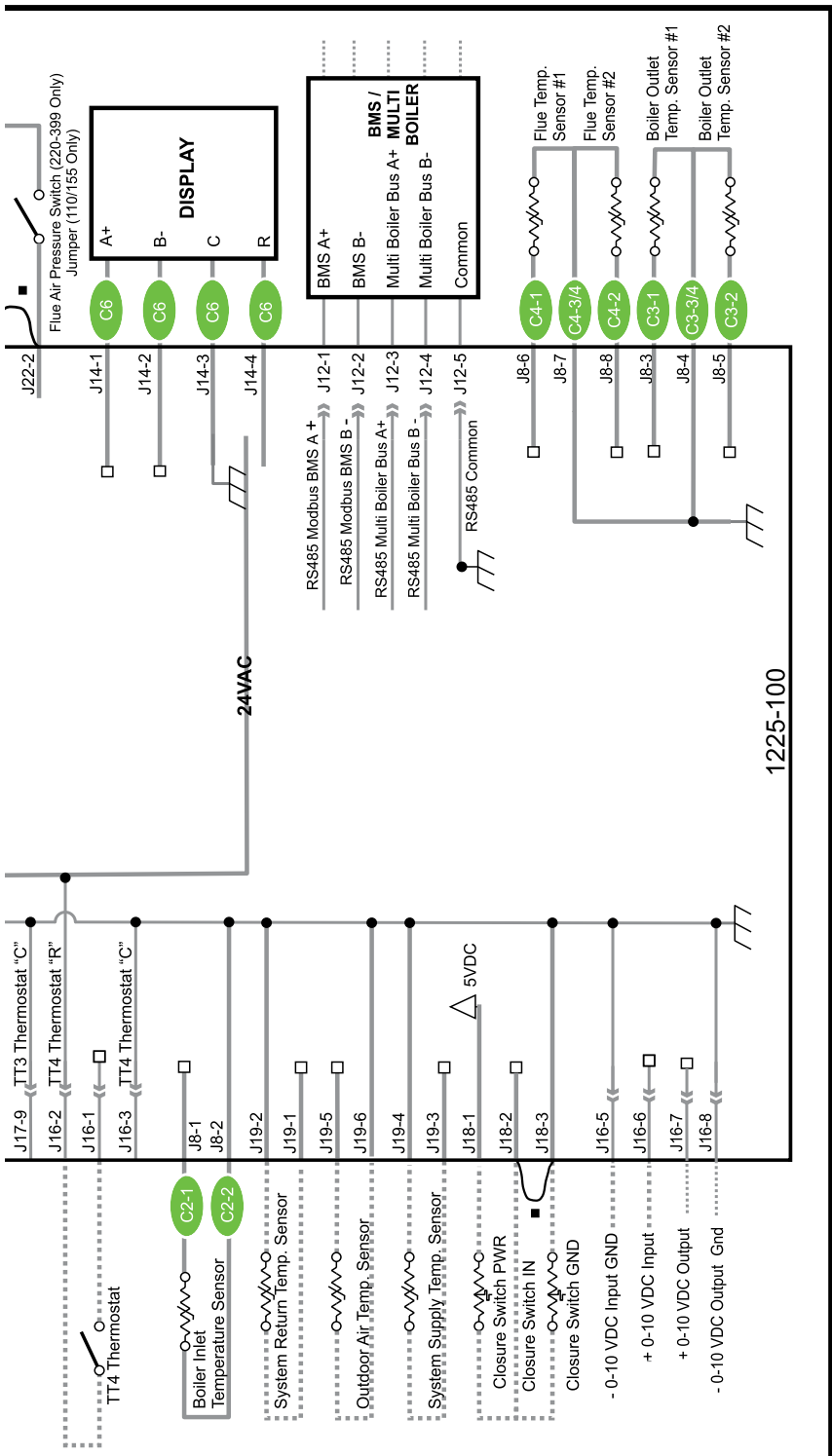

Wire Color	Symbol	Wire Color	Symbol
Black	BK	Red	R
Blue	BL	Yellow	Y
White	W	Green	G

Evergreen Pro Series 2
Ladder Wiring Diagram

⚠WARNING

Electrical shock hazard — can cause severe injury or death. Disconnect power before installing or servicing.

NOTICE

- All contacts shown without power applied.
  Indicates Factory Installed Jumpers, Remove Factory Jumpers if Using
  Items not provided.

NOTES *(for Schematic and Ladder Diagrams)*

1. All wiring must be installed in accordance with:
   U.S.A. — NEC ANSI/NFPA 70 - latest edition and any other national, state, or local code requirements.
   Canada — CSA C22.1 C.E.C. Part 1 and any other national, provincial, or local code requirements.
2. Connect additional limits (if used) between terminals J20-1 and J20-2 if the boiler circuit board is to manual reset on limit action. Connect between terminals J20-3 and J20-4 for automatic reset. Remove jumper across terminals used.
3. If any of the original wire as supplied with the appliance must be replaced, use minimum 105° C wire or equivalent. Exceptions: Ignition lead wire, ignition ground wire, and flame sense wire must be replaced only with Weil-McLain parts.
4. Thermostat anticipator setting (single zone) — set anticipator for 0.1 amps.
5. For multiple zoning, use either zone valves or circulators. Refer to the component manufacturer's instructions and the manual for application and wiring suggestions.
6. Refer to control component instructions packed with the boiler for application information.
7. To field wire a non-powered (isolated contact) low water cutoff, clip the factory jumper in the factory-installed Molex plug, strip the wires, and connect to the low water cutoff limit terminals.

Legend for ladder wiring diagram only

- 120VAC field wiring
- Low voltage field wiring
- Field ground connectors
- 120VAC factory wiring
- Low voltage factory wiring
- High voltage spark ignition wiring
- Ground connectors
- Harness Connector and Pin

WEIL-McLAIN

Weil-McLain • 500 Blaine St. • Michigan City, IN 46360-2388

550-233-143 (0526)

Zoning with the Evergreen® Pro Control

A. Zoning with CIRCULATORS, suggested applications

Four Space Heating Zones (no Indirect DHW)

(110/155 models shown, for 220-399, reference the wiring diagram).

1. Review wiring information on **page 76** (120VAC outputs) and **page 78** (24VAC inputs).
2. The configuration at right uses the four input/output pairs to receive thermostat inputs on J17-1/2, J17-4/5, J17-7/8 and J16-1/2; and circulator outputs as shown.
3. Choose the space heating system type that matches the heating system during the WIZARD setup or manually in the PRIORITY 2 menu in the System Settings menu.
4. Use the factory default settings for the system type chosen, or change if needed.

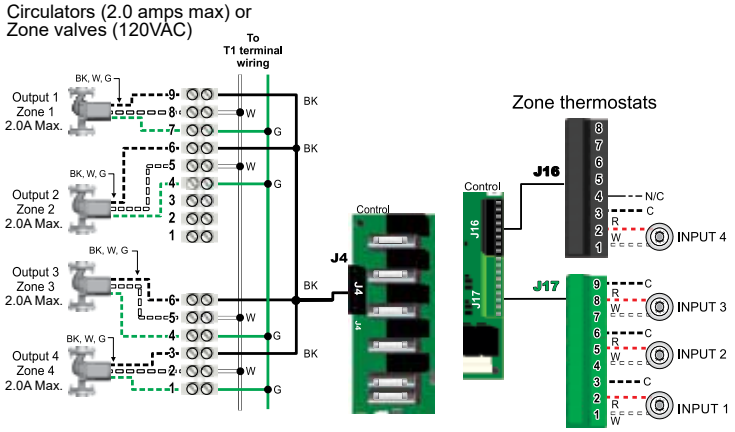

Three Space Heating Zones Plus Indirect DHW Piped Directly to Boiler

(110/155 models shown, for 220-399, reference the wiring diagram).

1. Review wiring information on **page 76** (120VAC outputs) and **page 78** (24VAC inputs).
2. The configuration at right uses INPUT 2, 3 and 4 for space heating thermostats. INPUT 1 uses the input from a DHW aquastat.
3. Assign Inputs 2/3/4 to PRIORITY 2 in the System Settings menu or Wizard. To set up PRIORITY 2, choose the space heating system type that matches the heating system during the WIZARD setup or manually in the PRIORITY 2 menu in the System Settings menu.
4. Assign INPUT 1 to PRIORITY 1.
5. Use the factory default settings for DHW and for the heating system type chosen, or change if needed.

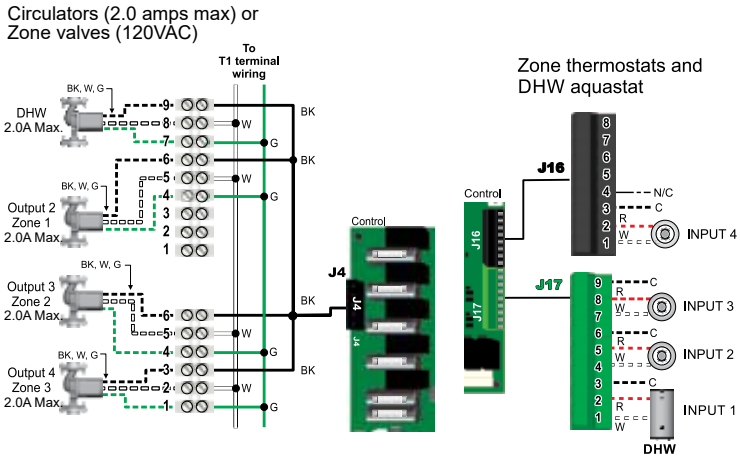

Zoning with the Evergreen® Pro Control (continued)

B. Zoning with ZONE VALVES, suggested applications

Three Space Heating Zones with Zone Valves (no Indirect DHW)

(110/155 models shown, for 220-399, reference the wiring diagram).

1. Review wiring information on **page 76** (120VAC outputs) and **page 78** (24VAC inputs).
2. The configuration at right uses INPUT 2, 3, and 4 for space heating thermostats. INPUT 1 is reserved here for configuring the operation of the system circulator.
3. System Settings 2, 3 and 4 to PRIORITY 2. To set up PRIORITY 2, choose the space heating system type that matches the heating system during the WIZARD setup or manually in the PRIORITY 2 menu in the System Settings menu.
4. Use the factory default settings for the heating system type chosen, or change if needed.
5. Assign INPUT 1 to AUX PUMP/OUTPUT. Then select INPUTS PRIORITY SETTING when prompted for when to activate the output. This will cause the system pump to run when either of the zones calls for heat. Confirm that Priority 2 RUN AUX PUMP/OUT is set to YES.
6. INPUT 1, J17-1/2, cannot be used for a wired connection because it is being used in the control setup to run the system circulator.

WARNING

The system must be equipped with a by-pass pressure regulating valve. Flow can occur with zone valves closed.

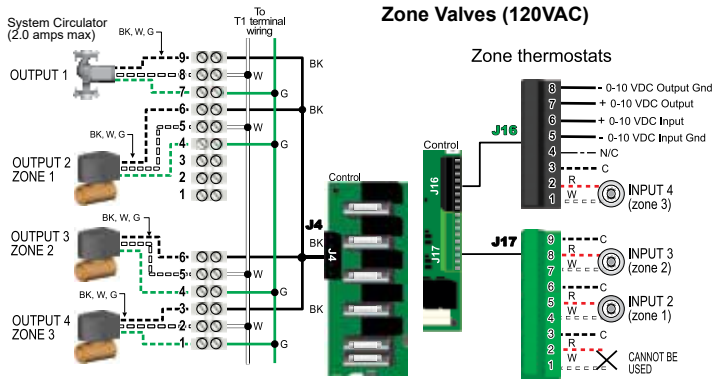

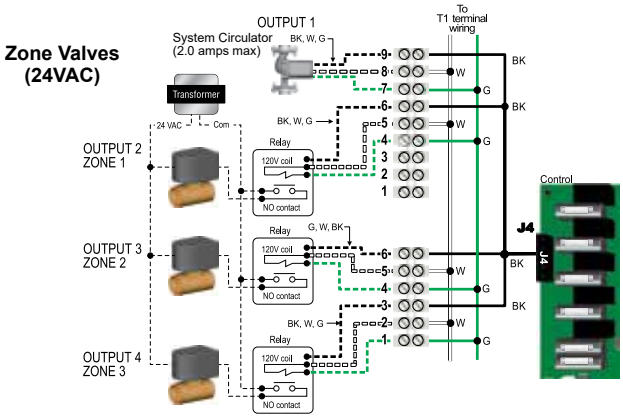

This page intentionally left blank.

Section 4 Operation

This section is intended to provide instructions for control setup and boiler startup procedures.

Section Contents

Control Setup and Operation 91
Startup - Fill The System 118
Startup - Final Checks 120
Annual Startup 129

Control Setup and Operation

Control Overview

This manual covers basic boiler control operation and setup. Refer to the Evergreen® Pro Advanced Manual for a walk-through of the complete control setup for more complex boiler applications.

- Control inputs and outputs allow operation of multiple heating circuits (space heating and DHW, for example).
- Up to three priority levels can be set, providing automatic switch-over on demand.
- The control responds to signals from the room thermostats, DHW aquastats (if used), boiler sensors (Boiler Out, Boiler In, flue temperature), system sensors, and outdoor temperature sensor, if used.
- The control automatically adjusts blower speed to match boiler output to space heating and DHW heating demand.
- The control provides up to four space heating zones. The control can be easily set up for operation with a DHW zone, with or without domestic priority.
- The Wizard leads through a step-by-step setup procedure designed for the application chosen.
- Context-sensitive help is available to explain the purpose of key setup items.

Control Setup

1. The control setup Wizard is available from the BOILER SETTINGS menu that appears during initial startup.
2. The Wizard leads through a step-by-step setup procedure designed for the application chosen.
3. Context-sensitive help is available to explain the purpose of key setup items.
4. See Express Setup instructions in the Advanced Manual for multi-boiler systems and minimum settings required.

⚠WARNING

BOILER MODEL, ALTITUDE, and FUEL TYPE are critical settings. Failure to set these correctly can result in severe personal injury, death, or substantial property damage.

NOTICE

Ensure the control is set for the proper water temperatures for the system. Excessive water temperature can result in significant property damage in some applications.

NOTICE

Multi-temperature systems — If the heating system includes both circuits that require lower temperature water and higher temperature circuits, protect the low-temperature circuits with limit controls that are wired to an control external limit circuit. Failure to provide regulation can result in substantial property damage.

Control Setup and Operation (continued)

Control Features

- ❑ Upload, adjust settings, and perform easier diagnostics via wireless communication.
- ❑ Color touch-screen display for ease of operation monitoring and troubleshooting.
- ❑ Easy configuration with Wizard step-by-step setup including on-screen help.
- ❑ The control can communicate to other controls and to existing Unity™ and Unity™ 2 controls in a multi-boiler network.
- ❑ Three programmable priority assignments for up to four heat inputs.
- ❑ Preset operating parameters for typical heating systems, including target temperatures, reset curves and circulator assignments.
- ❑ Integral outdoor reset option, with reset curves matched to the system type selected.
- ❑ Modbus communications for external communication and monitoring.
- ❑ 0-10 Vdc input modulation or remote target input.
- ❑ Five configurable outputs, including one boiler circulator output.
- ❑ Additional heat demand operation to call a second heat source to help supply the energy required for heating.
- ❑ Advanced PI response to anticipate system needs.
- ❑ Flue temperature modifier to target temperature.
- ❑ Modulation based on flue sensor and boiler out sensors.
- ❑ Dual temperature sensors on boiler outlet and flue, providing redundant protection.
- ❑ Boiler is shipped with an outdoor sensor.
- ❑ Blower speed modulation to control boiler firing rate.
- ❑ Alarm relay on error/fault for use with an audible safety.
- ❑ Blower calibration – allows fine tuning of blower control to reach purge speeds faster, reducing time to heat delivery.
- ❑ Temperature units – Select between using °F or °C.
- ❑ Manual Reset High Temperature Limits – Set High Limit temperature safety value.
- ❑ Daylight Saving Time – Select whether your boiler will obey Daylight Savings Time for your region.
- ❑ 0-10 Vdc Output to control classic lead/lag systems and variable speed boiler pumps.

Table 5 Control sequence of operation

Display status text	Control action (Also see the Advanced Manual)
POWER UP	• Check the boiler model listed on the power-up screen. If it is not correct, turn off the boiler. See page 106 and the Advanced manual for instructions to change setting. • When power is turned on, the screen lists sensors that are detected. If any sensor is not listed, make sure it is connected correctly. Turn off power and restart.
Standby	• Standby – no calls for heat. • Toggles through zero dots up to three dots while in standby (wrench symbol will show instead if maintenance is needed).
Blower Prepurge	• Call for heat detected. • Display on with BLUE (space heating) or PURPLE (DHW) banner. • Start min/max timers if more than one system is calling - highest priority starts first. • Start circulators for this priority setup based upon settings. • Calculate target temp – If sensor temp is below target temp, begin firing sequence. • Blower to ignition speed for prepurge.
Ignition	• After prepurge times out, begin ignition cycle. • Activate gas valve and ignition spark. • Continue ignition spark for ignition period. • Turn off spark and use electrode to check for flame signal.
Interpurge	• Turns off gas valve and runs blower at purge speeds to remove excess gases to prepare for re-ignition. Occurs when ignition fails or flame quality is too low.
Space Heating	• Flame detected. • Release boiler to modulation. • NOTE: If flame is not detected, the gas valve is turned off, blower turns on (postpurge), and control starts cycle again. After five failures, the control waits 60 minutes, then tries again. • If priority timer times out, switch to next priority and start priority timer. • If demand satisfied, go to postpurge.
DHW Heating	• Flame detected. • Release boiler to modulation. • NOTE: If flame is not detected, the gas valve is turned off, blower turns on (postpurge), and control starts cycle again. After five failures, the control waits 60 minutes, then tries again. • If priority timer times out, switch to next priority and start priority timer. • If demand satisfied, go to postpurge.
Blower Postpurge	• Demand satisfied (temperature reaches target temp or limit setting). • Gas valve off. • Blower to ignition speed for postpurge. • Return to standby after purge.
Maintenance	• Display banner turns BLUE, toggling between graphic screen and maintenance screen if maintenance schedule timer times out. • Will show during standby only. • Boiler operates as normal.
Error/fault	• Display banner turns RED due to error or limit event.
WWSD	• Warm weather shut down - the boiler is not allowed to fire on space heating if the outdoor temperature is greater than the WWSD setting. • DHW operation is not affected by WWSD.

Control Setup and Operation (continued)

Sequence of Operation

A summary of the control sequence is shown in **Table 6**. The statuses shown appear in the display as the control cycles the boiler. See **Figure 84, page 96** for screen shots. The display banner will be red if a problem has been detected.

Control Priorities, Inputs, and Outputs

- For heating installations with multiple systems, the control uses priorities to determine the order of operation of the systems. The control's MAX and MIN time settings determine the maximum and minimum times a priority will be operated before being turned off to allow another priority to operate. A typical example is DHW priority — heat demand from the DHW system is given preference over space heating, if set to use Priority 1.
- The MAX ON TIME setting controls the maximum time a priority will be allowed to run before switching to a lower priority's call for heat. The MIN ON TIME setting controls the minimum time a priority will be operated before switching to a higher priority's call for heat, or the next lower priority.
- Each Priority has its own set of operating parameters. The control prompts the user to select the system type.
- The 120 Vac power output to the boiler circulator is provided by a terminal block located in the boiler cabinet. For each of the priorities, the control can be setup to run 120v boiler pump, variable speed boiler pump, or to leave it off.
- Each boiler has has four input/output pairs that are assignable (INPUT/OUTPUT 1, 2, 3 and 4). Control setup prompts the user to assign each of these I/O pairs to a Priority. The control then knows which priority to operate when the input receives a call for heat. On a call for heat to an input, the control closes the corresponding output (120 Vac), and begins controlling the boilers according to the setup for the assigned priority.
- Multiple inputs that are set up on the same priority will run at the same time if the priority and inputs are active.

Table 6 Steps for boiler setup

Setting Up the Boiler	
STEP 1	Determine input/output needs – What are the inputs? – Thermostats, remote contacts, end switches, and other. What does each control's output need to do? – Operate a pump, activate an air louver, and other.
STEP 2	Install the boiler following all instructions in the Boiler Manual before proceeding further. Connect wiring to the control inputs and outputs to accomplish the purposes set in Step 1.
STEP 3	Follow instructions in the Boiler Manual to start up and power the boiler.
STEP 4	Use the Wizard (recommended), or enter control parameters manually (skip Wizard).

Table 7 Wizard sequence

WIZARD Sequence	
Boiler Settings	• Altitude must be set correctly for proper operation. • WWSD – set outdoor temperature above which space heating will be deactivated. • Fuel (natural gas or propane) must be set correctly for proper operation. The control will pause until this value is selected. • Set date and time – important for control diagnostic logging.
Inputs/ Outputs	• Select the usage of Inputs 1, 2, 3 and 4. • Determine usage of Outputs 1, 2, 3 and 4 (outputs correspond to inputs).
Set Priorities	• Assign priorities 1, 2 and 3 to the inputs.
System Types	• Specify what system type is connected to each of the four outputs; each system type causes the control to preset operating temperatures.
System Settings	• Set system settings or leave at their defaults.
Output Activation	• Select when to activate AUX PUMP/OUTPUT (when applicable).
Priority Switching	• Set maximum and minimum timings for priorities.
Information	• Set installer name and contact information. • Enter CP number, install date, etc. • Choose to activate Maintenance Reminder by selecting and adjusting Interval settings.

Control WIZARD

The Wizard is available on initial setup of the boiler. It leads through a step-by-step setup procedure designed for the application chosen. See **Table 7**. Context-sensitive help is available to explain the purpose of key setup Items.

Control Setup and Operation (continued)

Control Operation

1. The control responds to signals from:
   a. Room thermostats.
   b. DHW aquastats (if used).
   c. Temperature sensors Boiler Out, Boiler In, flue temperature and when used, outdoor temperature. For optimal performance, it is recommended to install System Supply and Return sensors.
2. The control automatically adjusts blower speed to match boiler output to space heating and/or DHW heating demand.
3. The control provides four inputs and four outputs (for circulators or auxiliary devices), plus a fifth boiler circulator.
4. The outdoor temperature is used for target temperature reset operation and for the Warm Weather Shut Down (WWSD) option.
5. The control provides presets by system type. For a complete list, see the Advanced manual.

Outdoor Temp for Min Target

OUTDOOR TEMP FOR MIN TARGET means the outdoor temperature at which the target temperature reaches its minimum (Min Target Temp). In the examples of, this occurs at 70 °F (the factory default).

Outdoor Temp for Max Target

OUTDOOR TEMP FOR MAX TARGET means the outdoor temperature at which the target temperature reaches its maximum value (Max Target Temp). In the examples of this occurs at 0°F outdoor (the factory default setting).

OUTDOOR TEMP FOR MAX TARGET should equal the Outdoor Temp (outdoor design temperature) for the installation's location.

Figure 81 Outdoor reset operation

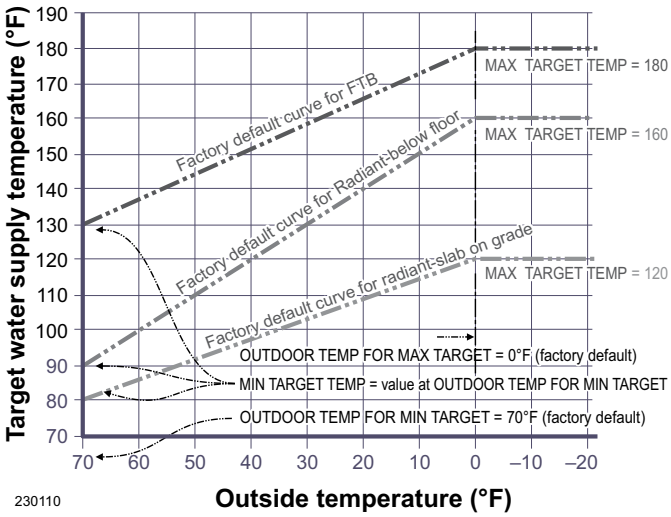

Outdoor Reset Operation

Set desired temperatures for space heating zones.

For an explanation of the target temperatures and associated outdoor temperatures, see.

The temperature settings discussed below are accessed in the priority menu for the applicable system. For detailed explanations of the priority menus, see the Advanced manual.

Max Target Temp:

Set MAX TARGET TEMP to the required supply water temperature for the system at design maximum heat loss; this is typically 180°F for finned tube baseboard on new installations.

Min Target Temp:

MIN TARGET TEMP should equal the desire minimum supply water temperature for the system.

The Min Temp is the setpoint whenever the ODT temp is above the ODT For Min Target and below the WWSD temps.

IMPORTANT

Setting the MIN TARGET TEMP value below the OUTDOOR TEMP FOR MIN TARGET may reduce the performance of the heating system at warmer outdoor temperatures.

Control Setup and Operation (continued)

Remote Target Operation (0–10 Vdc input)

1. This function allows a remote analog input to regulate the supply temperature for control operation/modulation. This can be done for any priority.
2. The settings discussed below are accessed in the priority menu for the applicable system. For detailed explanations of the priority menus, see the Advanced manual.
3. See **Figure 82** for an explanation of target temperature vs voltage when using remote target operation.
4. In the priority menu for the applicable system, select <0-10V> for the TARGET ADJUST setting.
5. In the same priority menu, select the <VOLTS FOR MIN TARGET> and <VOLTS FOR MAX TARGET> values. VOLTS FOR MIN TARGET sets the voltage value for the desired minimum supply temperature. VOLTS FOR MAX TARGET sets the voltage value for the desired maximum supply temperature.

Figure 82 Remote target operation

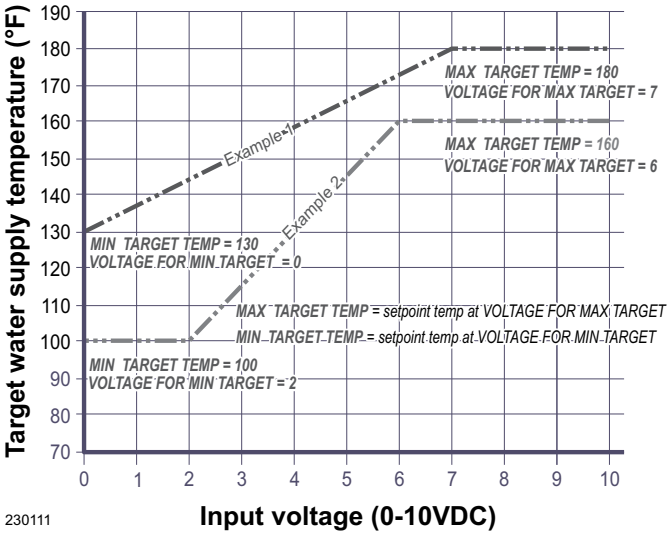

Remote Modulation Operation (0–10 Vdc input)

1. To use 0-10 Vdc for remote modulation:
   a. Go to Contractor Menu -> System Settings and select the appropriate priority.
   b. Select <Input 2> from System Setting menu, then change the Input 2 source to 0-10V.
   c. The priority that is assigned to Input 2 cannot be used by any other Input.
2. The boiler comes on at 0.9 Vdc and turns off at 0.5 Vdc. 1 Vdc = 10% input. 10 Vdc = 100% input. These voltage settings are adjustable.

Variable Speed Boiler Pumping (0–10 Vdc output)

1. Control Setup – Variable Speed Boiler Pump.
   a. 0-10 Vdc Output functionality allows for control of a variable speed boiler pump.
   b. Connect the output to 0-10 Vdc input of the pump.
   c. From the Contractor menu, navigate to Diagnostics -> Manual Test Mode. See **page 106**. With Force Rate highlighted, select <EDIT> then use the arrows to force to <High> and press <SAVE>.

Figure 83 Manual test mode screen

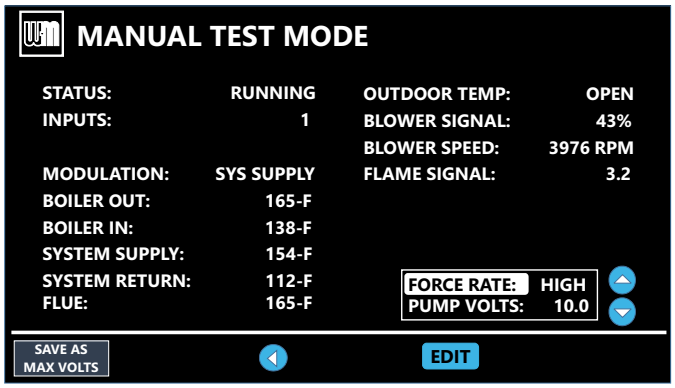

   d. Adjust the desired voltage to the desired delta T of the boiler and <SAVE AS MAX VOLTS>. Change the Pump Volts setting to AUTO to edit Force Rate again. Repeat for each Force Rate speed. Ignition speed rate sets voltage delivered to the pump when the burner is not active.
2. Operation – Variable Speed Boiler Pump.
   a. Variable Speed Max Rate Volts is desired voltage delivered to the pump when at high fire.
   b. Variable Speed Min Rate Volts is desired voltage delivered to the pump when at low fire.
   c. Volts When Burner Off is desired voltage delivered to the pump when the burner is not active.
   d. When the burner is active, the voltage output scales based on the boiler rate and the constraints of Variable Speed Min/Max Rate Volts.

Control Setup and Operation (continued)

Essential Control Settings

Figure 84 Boiler essential settings, REQUIRED on initial start-up.

Screen branching options

1. Occurs when a control is powered up after being fully configured.
2. Occurs when a factory-installed control is powered for the first time (applies for new boilers).
3. Occurs when a new control is first powered, or when a control is reset to factory defaults; this will not be shown on new boilers as the control has been factory tested.

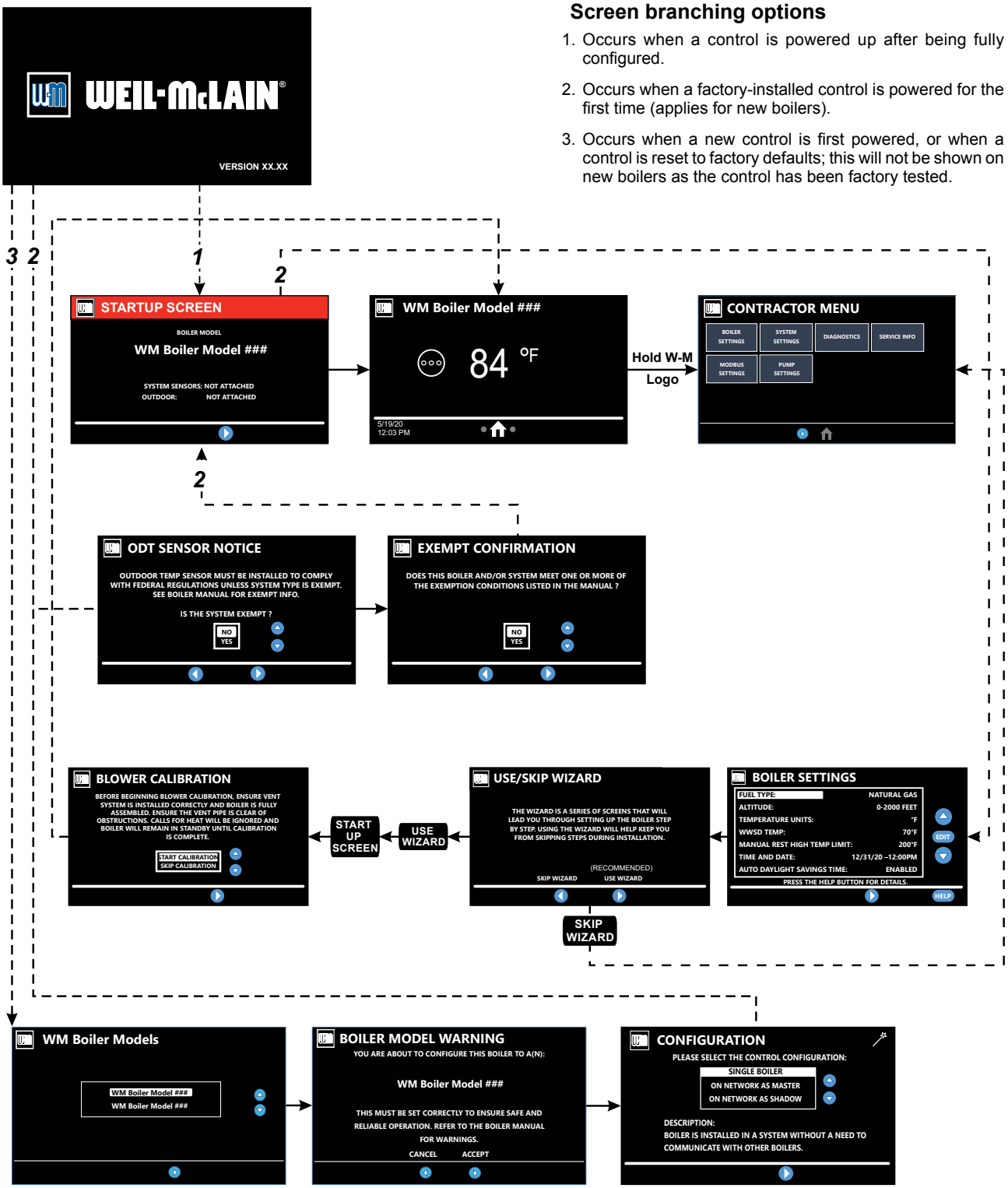

Screens shown above are typical only.
Actual screens depend on control settings chosen.

Control Settings Menus

Figure 85 Evergreen® Pro control display screens and typical navigation

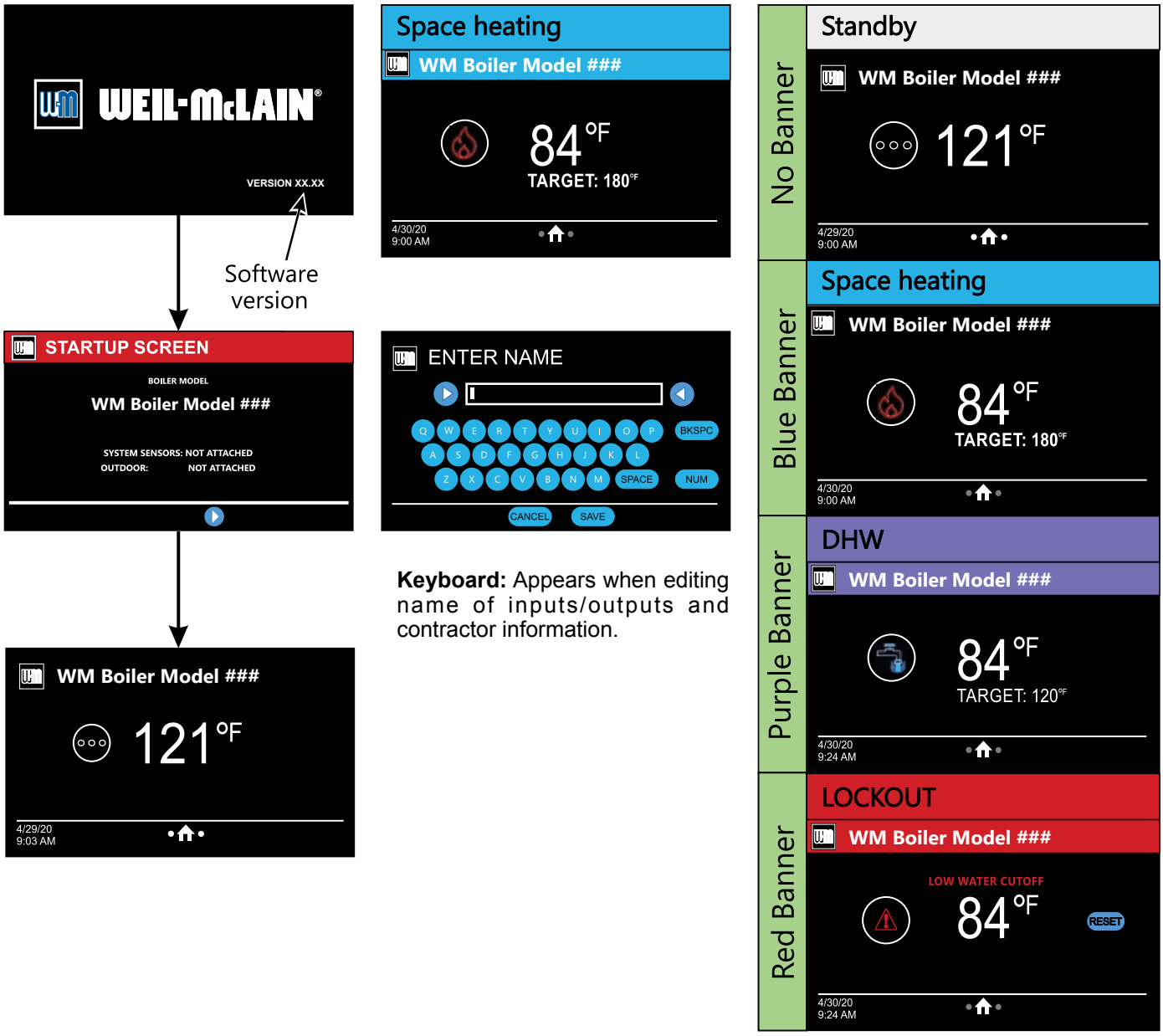

Navigation Controls

Swipe: Slide finger left or right on the screen to navigate forward and backward on applicable screens.

Press: Touch icons on screen to perform specified action.

Scroll: Place finger on slide bar empty space and hold to scroll. Applicable screens can also be swiped up or down to scroll.

Double tap: Applicable on editable parameters. Allows user to enter edit mode by double tapping parameter.

Screens shown above are typical only.
Actual screens depend on control settings chosen.

EXPRESS SETUP - Example A

Multi- Zone **SPACE HEATING** (Circulators with circulator relays) | **DHW** (Direct-piped)

PIPING

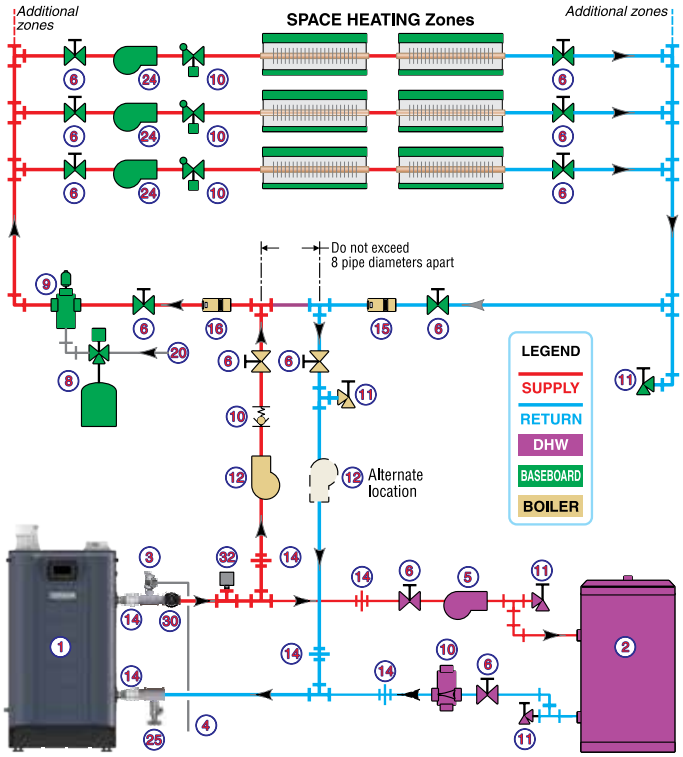

LEGEND

1. ■ **Evergreen® Pro** boiler.
2. Indirect water heater, if used (domestic water piping not shown) - See **"Circulators and Piping" on page 99**.
3. ■ Relief valve, supplied with boiler, field piped - MUST be piped to Boiler In connection - see **Figure 12, page 21** for information.
4. Relief valve piping to drain.
5. DHW circulator.
6. Isolation valves.
8. Expansion tank.
9. Air separator.
10. Flow/check or spring check valves.
11. Purge/drain valves.
12. ■ Boiler circulator, supplied with boiler, field piped.
14. Unions as needed for service.
15. Return temperature sensor.
16. Supply temperature sensor.
20. Make-up water supply.
24. Zone circulators.
25. ■ Boiler drain valve, supplied with boiler, field piped.
30. ■ Pressure/temperature gauge, supplied with boiler, field piped.
31. Outdoor sensor.
32. Low water cut-off.
33. 120VAC power to boiler - see **page 76**.
35. Control board

■ = Items supplied with boiler - all other Items supplied by installer.

FIELD WIRING

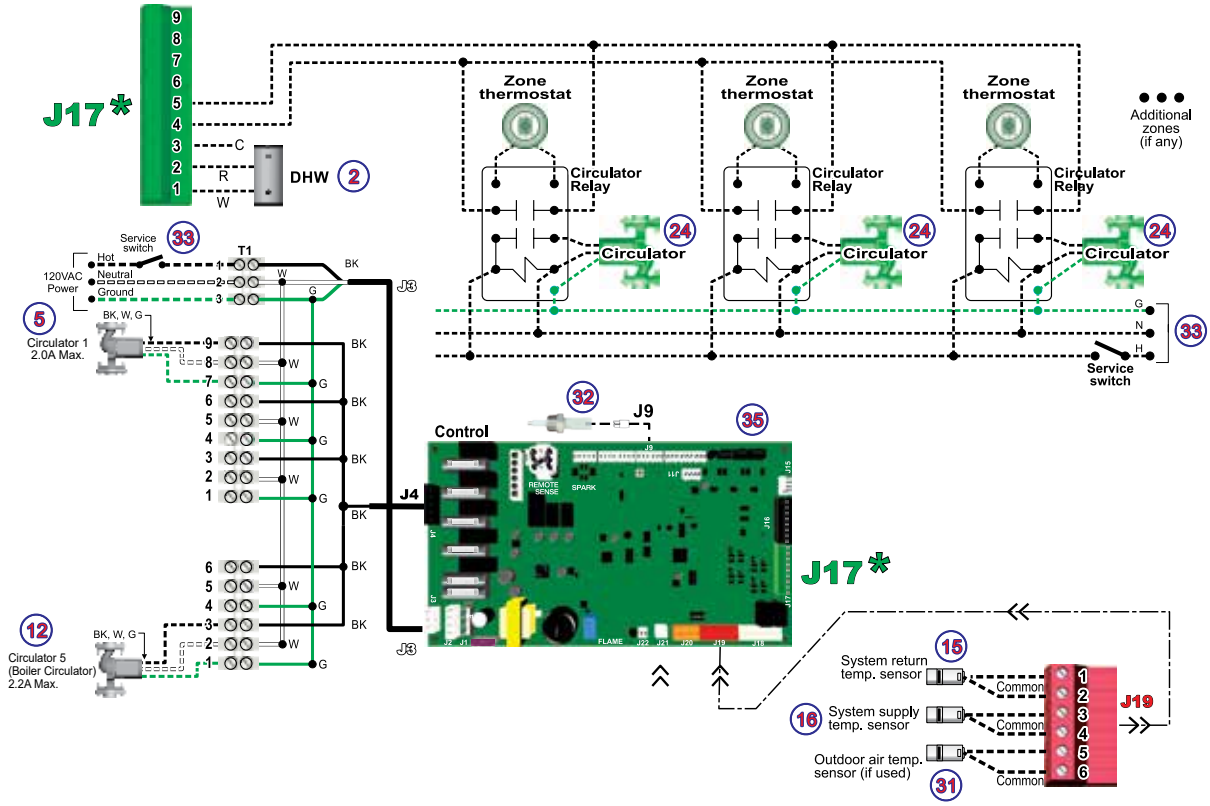

EXPRESS SETUP - EXAMPLE A (continued)

Multi- Zone **SPACE HEATING** (Circulators with circulator relays) | **DHW** (Direct-piped)

WARNING

Boiler Model, Altitude and Fuel Type are critical settings. Failure to set correctly could result in severe personal injury, death or substantial property damage.

Incorrect setup or piping can result in severe personal injury, death or substantial property damage.

Use primary/secondary piping or equivalent unless system meets requirements on **page 59**.

Verify that the correct system type is selected on the control and that operating temperature settings are suitable for the system. System and structural damage can occur if temperatures are too high.

Purpose

- Space heating with multiple zones.
- Zoning with circulators using circulator relays.
- DHW piped directly to the boiler.
- DHW priority — space heating is disabled during call for heat from water heater.

Control Setting Notes

- See the table at right for required and optional settings.
- The sequence in the table follows the WIZARD.
- If not using the WIZARD, follow instructions elsewhere in this manual to enter the settings manually.

Circulators and Piping

WARNING

Provide an external relay and external power to the boiler circulator if its load rating exceeds 2.2 amps FLA, 3.6 amps locked rotor, or 16.4 amps in rush for boiler circulators, and 2.0 amps FLA for system circulators.

- Piping must be primary/secondary as shown.
- DHW circulator must be selected to handle the pressure drop through the boiler, water heater and piping. DHW circulator supplied by installer.
- For some large indirect water heaters, the required flow rate may require piping the water heater differently.
- The control settings in table at right provide DHW priority — space heating will be discontinued during a call for DHW.
- Zone circulators and relays supplied by installer.
- Boiler circulator must not run for this DHW application. Change 'Run 120v Boiler Circulator' setting to 'NO' in the Priority Settings menu.

BOILER

- Boiler circulator shipped loose with boiler.
- Follow all instructions in this manual for piping boiler and system.

Control settings (in order of WIZARD sequences)	***Bold italic*** - value must be set or verified D - default acceptable; change only if desired
BOILER SETTINGS	
Boiler Model	***Verify model number is correct***
WWSD Temp	***Default (70 °F) or as required***
High Altitude	***Set to closest altitude if over 2,000 feet***
INPUT/OUTPUT 1 (Assign to PRIORITY 1) (Note 1)	
What is the use of input/output 1?	***HEAT DEMAND***
WHAT PRIORITY IS INPUT #1?	*Select **PRIORITY 1***
What system type is input/output 1?	***DHW*** *(D)*
TARGET MODULATION SENSOR	***BOILER OUT*** *(D)*
TARGET ADJUST	***NONE*** *(D)*
TARGET MAX	**D** (or change if desired)
RUN 120V BOILER PUMP?	***NO***
RUN AUX PUMP/OUTPUT?	**D** (not applicable)
INPUT/OUTPUT 2 (Assign to PRIORITY 2)	
What is the use of input/output 2?	***HEAT DEMAND***
WHAT PRIORITY IS INPUT #2?	***PRIORITY 2***
What system type is input/output 2?	***Select correct system type***
TARGET MODULATION SENSOR	***System Supply*** *(D)*
TARGET ADJUST	***ODT*** *(D)* *(Outdoor sensor must be installed)*
MAX TARGET	**D** (or change if desired)
MIN TARGET	**D** (or change if desired)
OUTDOOR TEMP FOR MAX TARGET	**D** (or change if desired)
OUTDOOR TEMP FOR MIN TARGET	**D** (or change if desired)
Boost Time	**D** (or change if desired)
RUN 120V BOILER PUMP?	***YES*** *(D)*
RUN AUX PUMP/OUTPUT?	**D** *(not applicable)*
INPUT/OUTPUT 3 (Not used)	
What is the use of input/output 3?	***NONE***
INPUT/OUTPUT 4 (Not used)	
What is the use of input/output 4?	***NONE***
PRIORITY SWITCH TIMES:	
P1 MAX ON TIME	**D** (or change if desired)
P2 MIN ON TIME	**D** (or change if desired)
Finish the WIZARD	
ENTER TIME, DATE AND MAINTENANCE INFORMATION AS PROMPTED	

4

EXPRESS SETUP - Example B

2 or 3-Zone HEATING (Circulators without circulator relays) | DHW (Direct Piped)

PIPING

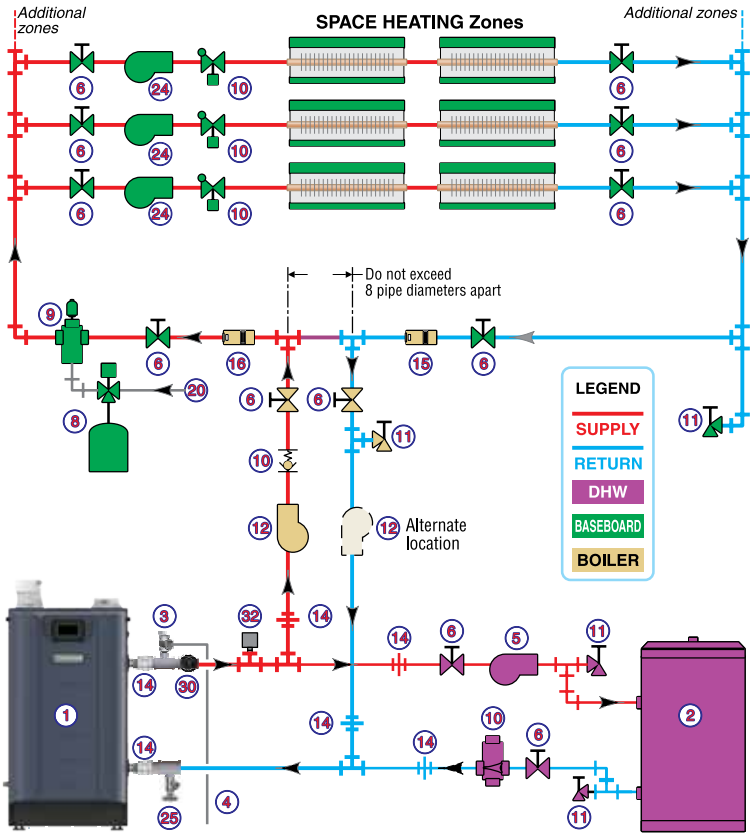

LEGEND

1. ■ **Evergreen® Pro** boiler.
2. Indirect water heater, if used (domestic water piping not shown) - See **"Circulators and Piping" on page 101**.
3. ■ Relief valve, supplied with boiler, field piped - MUST be piped to Boiler In connection - see **Figure 12, page 21** for information.
4. Relief valve piping to drain.
5. DHW circulator.
6. Isolation valves.
8. Expansion tank.
9. Air separator.
10. Flow/check or spring check valves.
11. Purge/drain valves.
12. ■ Boiler circulator, supplied with boiler, field piped.
14. Unions as needed for service.
15. Return temperature sensor.
16. Supply temperature sensor.
20. Make-up water supply.
24. Zone circulators.
25. ■ Boiler drain valve, supplied with boiler, field piped.
30. ■ Pressure/temperature gauge, supplied with boiler, field piped.
31. Outdoor sensor.
32. Low water cut-off.
33. 120VAC power to boiler - see **page 76**.
35. Control board

■ = Items supplied with boiler - all other Items supplied by installer.

FIELD WIRING

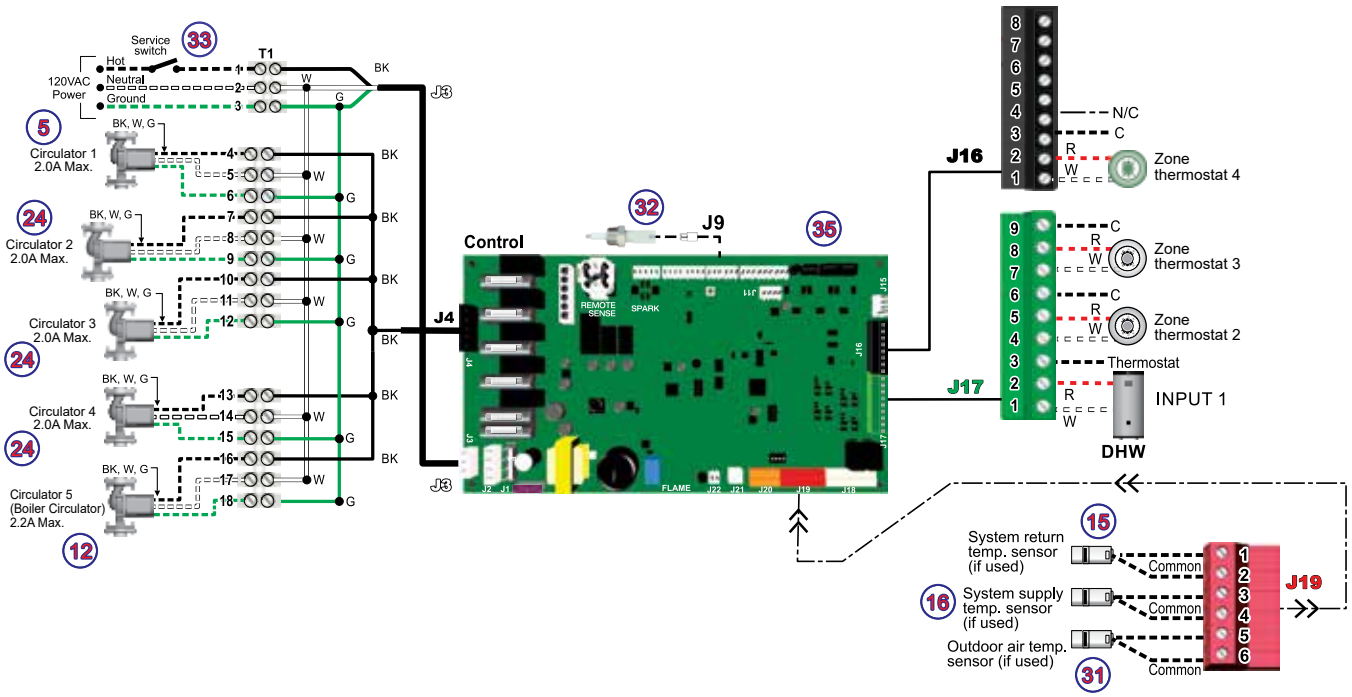

EXPRESS SETUP - EXAMPLE B (continued)

SPACE HEATING w/DHW (Circulators without circulator relays)

WARNING

Boiler Model, Altitude and Fuel Type are critical settings. Failure to set correctly could result in severe personal injury, death or substantial property damage.

Incorrect setup or piping can result in severe personal injury, death or substantial property damage.

Use primary/secondary piping or equivalent unless system meets requirements on **page 59**.

Verify that the correct system type is selected on the control and that operating temperature settings are suitable for the system. System and structural damage can occur if temperatures are too high.

Purpose

- Space heating with multiple zones.
- Zoning with circulators using EVG control outputs to operate zone circulators (four zones if space heating only, three zones if DHW Indirect in system).
- DHW piped directly to the boiler.
- DHW priority — space heating is disabled during call for heat from water heater.

Control Setting Notes

- See the table at right for required and optional settings.
- The sequence in the table follows the WIZARD.
- If not using the WIZARD, follow instructions elsewhere in this manual to enter the settings manually.

Circulators and Piping

WARNING

Provide an external relay and external power to the boiler circulator if its load rating exceeds 2.2 amps FLA, 3.6 amps locked rotor, or 16.4 amps in rush for boiler circulators, and 2.0 amps FLA for system circulators.

- Piping must be primary/secondary as shown.
- DHW circulator must be selected to handle the pressure drop through the boiler, water heater and piping. DHW circulator supplied by installer.
- For some large indirect water heaters, the required flow rate may require piping the water heater differently.
- The control settings in table at right provide DHW priority — space heating will be discontinued during a call for DHW.
- Zone circulators supplied by installer.
- Boiler circulator must not run for this DHW application. Change 'Run 120v Boiler Circulator' setting to 'NO' in the Priority Settings menu.

BOILER

- Boiler circulator shipped loose with boiler.
- Follow all instructions in this manual for piping boiler and system.

Control settings (in order of WIZARD sequences)	***Bold italic*** - value must be set or verified D - default acceptable; change only if desired
BOILER SETTINGS	
Boiler Model	***Verify model number is correct***
WWSD Temp	***Default (70 °F) or as required***
High Altitude	***Set to closest altitude if over 2,000 feet***
INPUT/OUTPUT 1 (Assign to PRIORITY 1) (Note 1)	
What is the use of input/output 1?	***HEAT DEMAND***
WHAT PRIORITY IS INPUT #1?	*select* ***PRIORITY 1***
What system type is input/output 1?	***DHW*** *(D)*
TARGET MOD SENSOR	***BOILER OUT*** *(D)*
TARGET ADJUST	***NONE*** *(D)*
TARGET MAX	**D** *(or change if desired)*
RUN 120V BOILER PUMP?	***NO***
RUN AUX PUMP/OUTPUT?	**D** *(not applicable)*
INPUT/OUTPUT 2 (Assign to PRIORITY 2)	
What is the use of input/output 2?	***HEAT DEMAND***
WHAT PRIORITY IS INPUT #2?	***PRIORITY 2***
What system type is input/output 2?	***Select correct system type***
TARGET MODULATION SENSOR	***SYSTEM SUPPLY (D)***
TARGET ADJUST	***ODT*** *(D)* *(Outdoor sensor must be installed)*
MAX TARGET	**D** *(or change if desired)*
MIN TARGET	**D** *(or change if desired)*
OUTDOOR TEMP FOR MAX TARGET	**D** *(or change if desired)*
OUTDOOR TEMP FOR MIN TARGET	**D** *(or change if desired)*
BOOST TIME	**D** *(or change if desired)*
RUN 120V BOILER PUMP?	***YES*** *(D)*
RUN AUX PUMP/OUTPUT?	**D** *(not applicable)*
INPUT/OUTPUT 3 (Not used)	
What is the use of input/output 3?	***NONE***
INPUT/OUTPUT 4 (Not used)	
What is the use of input/output 4?	***NONE***
PRIORITY SWITCH TIMES:	
P1 MAX ON TIME	**D** (or change if desired)
P2 MIN ON TIME	**D** (or change if desired)
Finish the WIZARD	
ENTER TIME, DATE AND MAINTENANCE INFORMATION AS PROMPTED	

Note 1: If DHW is not used, provide a fourth space heating zone by setting up INPUT/OUTPUT 1 exactly the same as INPUT/OUTPUT 2. Make sure to assign INPUT/OUTPUT 1 to PRIORITY 2. Wire the third zone thermostat to P11–4&5 and its circulator to P9–1,4&5.

4

EXPRESS SETUP - Example C

Multi-zone **SPACE HEATING** (Zone valves) | **DHW** (Direct-piped)

PIPING

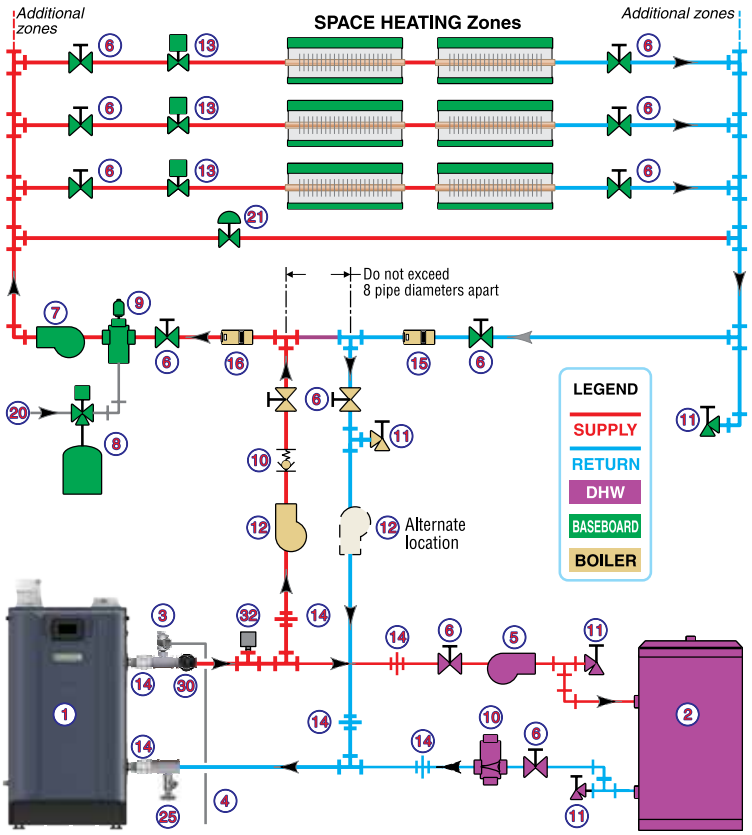

LEGEND

1. ■ **Evergreen® Pro** boiler.
2. Indirect water heater, if used (domestic water piping not shown) - See **"Circulators and Piping" on page 103**.
3. ■ Relief valve, supplied with boiler, field piped - MUST be piped to Boiler In connection - see **Figure 12, page 21** for information.
4. Relief valve piping to drain.
5. DHW circulator.
6. Isolation valves.
7. System circulator.
8. Expansion tank.
9. Air separator.
10. Flow/check or spring check valves.
11. Purge/drain valves.
12. ■ Boiler circulator, supplied with boiler, field piped.
13. Zone valves.
14. Unions as needed for service.
15. Return temperature sensor.
16. Supply temperature sensor.
20. Make-up water supply.
21. By-pass pressure regulator, REQUIRED for zone valve systems
25. ■ Boiler drain valve, supplied with boiler, field piped.
30. ■ Pressure/temperature gauge, supplied with boiler, field piped.
31. Outdoor sensor.
32. Low water cut-off.
33. 120VAC power to boiler - see **page 76**.
35. Control board

■ = Items supplied with boiler - all other Items supplied by installer.

FIELD WIRING

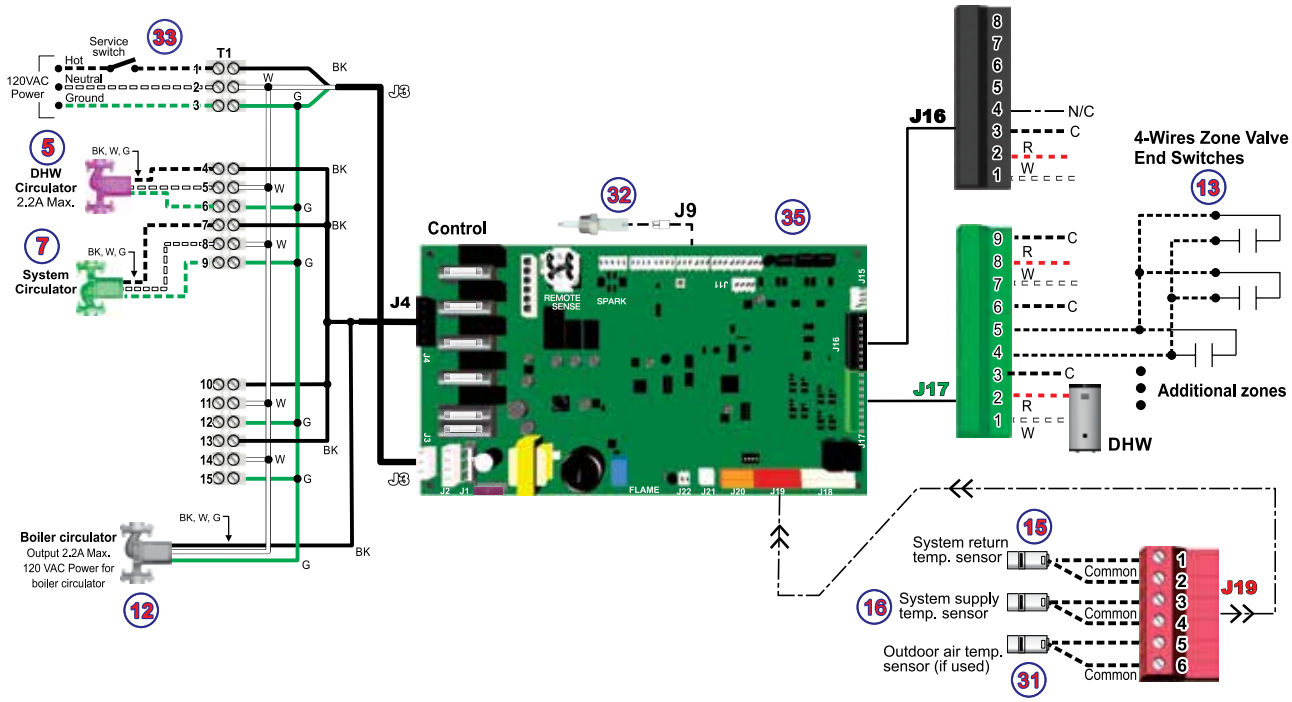

EXPRESS SETUP - Example C (continued)

Multi-zone SPACE HEATING (Zone valves) | **DHW** (Direct-piped)

WARNING

Boiler Model, Altitude and Fuel Type are critical settings. Failure to set correctly could result in severe personal injury, death or substantial property damage.

Incorrect setup or piping can result in severe personal injury, death or substantial property damage.

Use primary/secondary piping or equivalent unless system meets requirements on **page 59**.

Verify that the correct system type is selected on the control and that operating temperature settings are suitable for the system. System and structural damage can occur if temperatures are too high.

Purpose

- Space heating with multiple zones.
- Zoning with zone valves. DO NOT use 3-wire zone valves — the voltage on the valve end switch will damage the EVG control. Use only 4-wire zone valves with isolated end switches.
- DHW piped directly to the boiler.
- DHW priority — space heating is disabled during call for heat from water heater.

Control Setting Notes

- See the table at right for required and optional settings.
- The sequence in the table follows the WIZARD.
- If not using the WIZARD, follow instructions elsewhere in this manual to enter the settings manually.
- The system circulator is wired to OUTPUT 2. It will be activated on any call for heat from a zone valve end switch.

Circulators and Piping

WARNING

Provide an external relay and external power to the boiler circulator if its load rating exceeds 2.2 amps FLA, 3.6 amps locked rotor, or 16.4 amps in rush for boiler circulators, and 2.0 amps FLA for system circulators..

- Piping must be primary/secondary as shown.
- DHW circulator must be selected to handle the pressure drop through the boiler, water heater and piping. DHW circulator supplied by installer.
- For some large indirect water heaters, the required flow rate may require piping the water heater differently.
- The control settings in table at right provide DHW priority — space heating will be discontinued during a call for DHW.
- Zone valves and system circulator supplied by installer.
- Boiler circulator must not run for this DHW application. Change 'Run 120v Boiler Circulator' setting to 'NO' in the Priority Settings menu.
- A by-pass pressure regulator is recommended when used in a zone valve system as shown in this express setup, see **page 88**.

BOILER

- Boiler circulator shipped loose with boiler.
- Follow all instructions in this manual for piping boiler and system.

Control settings (in order of WIZARD sequences)	***Bold italic*** - value must be set or verified D - default acceptable; change only if desired
BOILER SETTINGS	
Boiler Model	***Verify model number is correct***
WWSD Temp	***Default (70 °F) or as required***
High Altitude	***Set to altitude if over 2,000 feet***
INPUT/OUTPUT 1 (Assign to PRIORITY 1)	
What is the use of input/output 1?	***HEAT DEMAND***
WHAT PRIORITY IS INPUT #1?	*Select* ***PRIORITY 1***
What system type is input/output 1?	***DHW*** *(D)*
TARGET MODULATION SENSOR	***BOILER OUT*** *(D)*
TARGET ADJUST	***NONE*** *(D)*
TARGET MAX	**D** (or change if desired)
RUN 120V BOILER PUMP?	***NO***
RUN AUX PUMP/OUTPUT?	**D** (not applicable)
INPUT/OUTPUT 2 (Assign to PRIORITY 2)	
What is the use of input/output 2?	***HEAT DEMAND***
WHAT PRIORITY IS INPUT #2?	***PRIORITY 2***
What system type is input/output 2?	***Select correct system type***
TARGET MODULATION SENSOR	***System Supply*** *(D)*
TARGET ADJUST	***ODT*** *(D)* *(Outdoor Temp sensor must be installed)*
MAX TARGET	**D** (or change if desired)
MIN TARGET	**D** (or change if desired)
OUTDOOR TEMP FOR MAX TARGET	**D** (or change if desired)
OUTDOOR TEMP FOR MIN TARGET	**D** (or change if desired)
BOOST TIME	**D** (or change if desired)
RUN 120V BOILER PUMP?	***YES*** *(D)*
RUN AUX PUMP/OUTPUT?	**D** (not applicable)
INPUT/OUTPUT 3 (Not used)	
What is the use of input/output 3?	**NONE**
INPUT/OUTPUT 4 (Not used)	
What is the use of input/output 4?	**NONE**
PRIORITY SWITCH TIMES:	
P1 MAX ON TIME	**D** (or change if desired)
P2 MIN ON TIME	**D** (or change if desired)
Finish the WIZARD	
ENTER TIME, DATE AND MAINTENANCE INFORMATION AS PROMPTED	

Note 1: If DHW is not used, set the USE of INPUT/OUTPUT 1 to NONE. Keep all other wiring as shown at right and follow all settings given above for PRIORITY 2.

NAVIGATION Menus

Figure 86 NAVIGATION menus

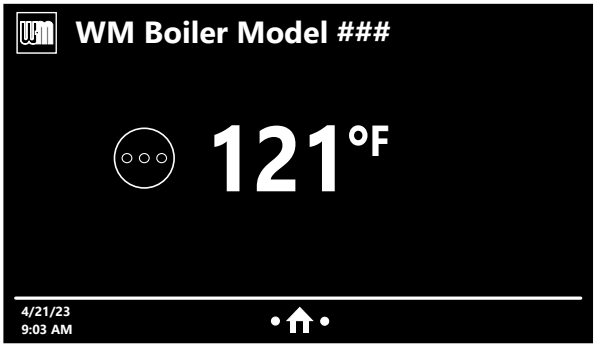

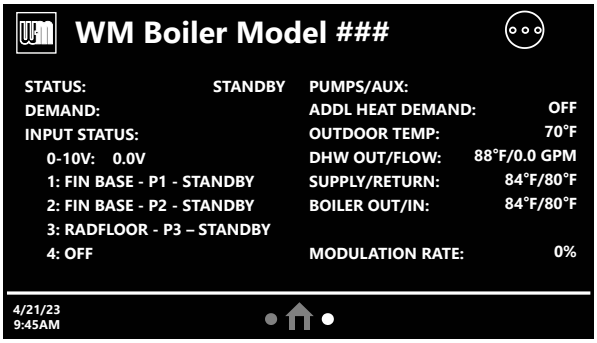

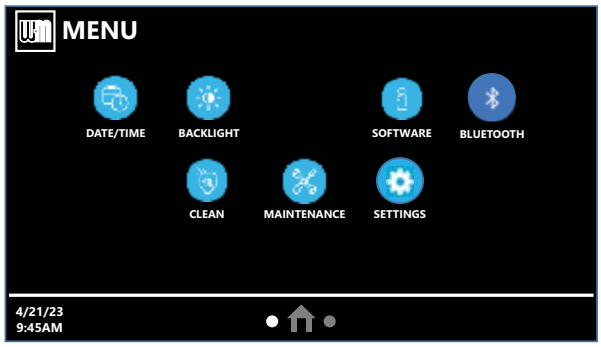

Menu Item	Purpose
HOME SCREEN	• Banner info • Status image • Fault name and reset button • Time/Date • Navigation buttons – 2 dots and Home • Current temperature • Target Temperature (when a priority is active)
BOILER INFORMATION SCREEN	• Status: Shows the current sequence of operation status with the active priority. • Input Status: Shows the current status of each call for heat. • 0-10v: Shows the current 0-10v input value from external device. • 1-4: Shows inputs 1 through 4, what they are assigned to, their custom names and their status. • Pumps/Aux: Shows which aux/pump outputs are currently active. • Additional Heat Demand: Shows whether AHD is off or on. Only appears if a priority is selected to use AHD. • Outdoor Temp: Shows the current outdoor temperature sensor value. Only visible if selected to use. • Supply/Return: Shows the current System Supply and System Return temperature. Only visible if selected to use. • Boiler Out/In: Shows the current Boiler Out and Boiler In temperatures. • Target Temp: Shows the current Target Temperature of the active priority. • Mod Rate: Shows the modulation rate of the boiler's blower motor.
DATE/TIME BUTTON	• Allows user to edit the current date and time.
BACKLIGHT	• Allows user to edit how bright the screen is during normal operation and when dormant.
CLEAN	• Locks the screen so nothing can be pressed for 10 seconds while the user cleans the screen.
SOFTWARE	• Displays the current software revisions of the control and display, log file and fault file size.

Screens shown on these pages are typical only.
Actual screens depend on control settings chosen.

NAVIGATION Menus (continued)

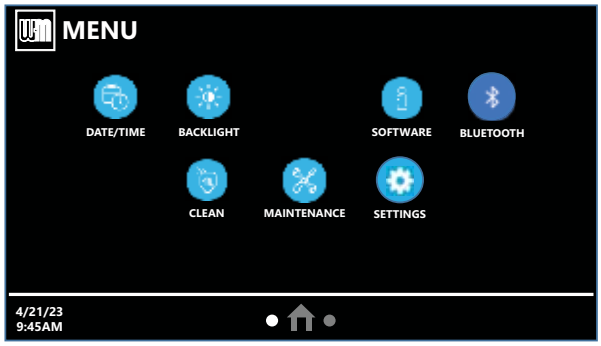

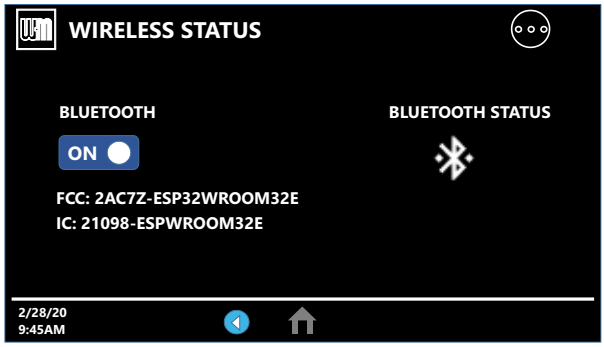

Menu Item	Purpose
BLUETOOTH®	• Allows the user to turn Bluetooth ON or OFF. Swipe right from HOME and press <BLUETOOTH> to reach FCC and IC information. • Bluetooth allows the user to connect remotely to the WM ProTool app for wireless communication to the boiler. The app functions include, but are not limited to, allowing the user to install the latest software for their boiler control, display, and Bluetooth radio, giving quick access to boiler information, and providing contact information to WM Technical Services.
Assembled From tested components. Complete system not tested.	FCC: Wireless device unique identifier registered with the U.S. Federal Communications Commission. IC: Wireless certification approval number unique to all devices, required for Canada. • This device complies with Part 15 of the FCC Rules. Operation is subject to the following two conditions: (1) this device may not cause harmful interference, and (2) this device must accept any interference received, including interference that may cause undesired operation.
MAINTENANCE	• Allows the user to view contractor and maintenance information, as well as reset the maintenance reminder when present.
SETTINGS	• Allows the user to edit temperature units, screen time out, daylight savings time and sound effect of presses.

CONTRACTOR Menu

Accessing Contractor Menus

WARNING

Boiler Model, Altitude and Fuel Type are critical settings. Failure to set these correctly can result in severe personal injury, death, or substantial property damage.

Access contractor menus by pressing the WM Logo for seven seconds from the home screen.

Service Menu Section

Use this section to enter contractor's information, Consumer Protection (CP) number, install date, and an automatic notice for maintenance (default is 12 months). The notice for maintenance shows on the display and automatically notifies the homeowner of the need for scheduled maintenance by the technician. Select RESET REMINDER to reset for the next maintenance date.

Figure 87 CONTRACTOR menus

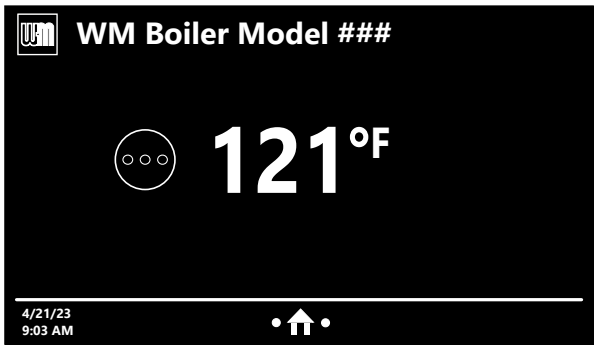

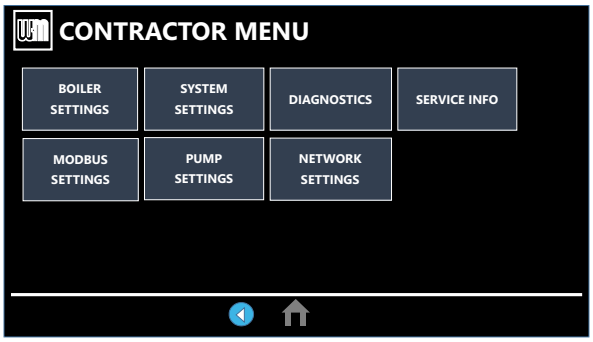

Menu Item	Purpose
BOILER SETTINGS	• Set or change boiler model, control type, high altitude setting, ODT sensor requirement, manual reset high limit and WWSD temperature settings. • Outdoor sensor temp adjustment. • Restore to factory default option. • Fuel type and blower calibration.
SYSTEM SETTINGS	• These settings assign Priority 1, 2 or 3 to each of the four inputs to the control and see an overview of assigned priorities.
DIAGNOSTICS	• Use to review current and historical information, including previous lockouts.
SERVICE INFO	• Used to set contractor contact information, boiler information and maintenance dates.
MODBUS SETTINGS	• Used to adjust Modbus related settings such as Baud Rate, Parity and Stop Bits, Modbus Address and turning Modbus on/off.
PUMP SETTINGS	• Holds menu for Circulator Exercising, Freeze Protect Circulators, 0-10V Pump output, Variable Speed Max Rate Volts, Variable Speed Min Rate Volts, and Volts When Boiler Off settings. • Manual Test mode shortcut button.
NETWORK SETTINGS	• See Advanced Manual.

Screens shown on these pages are typical only.
Actual screens depend on control settings chosen.

BOILER SETTINGS Menus

Boiler Settings Menus Navigation

1. Access contractor menus by pressing the WM Logo for seven seconds from the home screen.
2. Select BOILER SETTINGS on the screen.
3. See Figure 88 for an explanation of control settings

WARNING

Boiler Model, Altitude and Fuel Type are critical settings. Failure to set these correctly can result in severe personal injury, death, or substantial property damage.

Figure 88 BOILER SETTINGS options

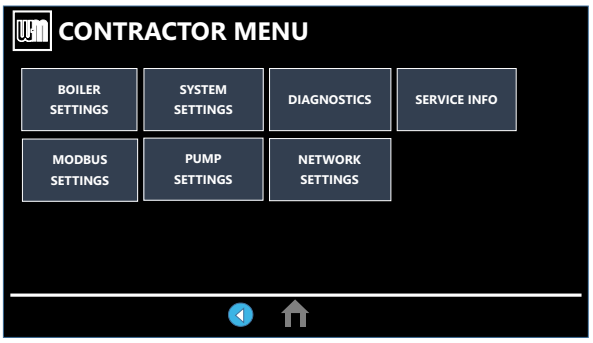

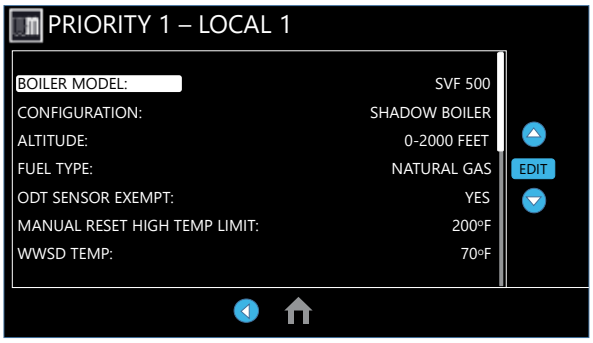

Menu Item	Purpose
BOILER MODEL	• ***MUST be set to the correct model.*** • Check the boiler model against the model listed on the boiler's rating plate. Change the selection to the correct model if incorrect. Also verify the model number on the control display at power-up.
CONFIGURATION	• Change boiler configuration to Single boiler, Master or Shadow boiler.
ALTITUDE	• ***MUST be set correctly if altitude is greater than 2,000 feet.*** • Settings are in 500-foot increments.
FUEL TYPE	• ***MUST be set to the correct fuel type.*** • Select between Propane and Natural Gas. Follow screen instructions to change if necessary.
OUTDOOR TEMP SENSOR EXEMPT	• Select YES only if boiler is exempt from the requirement for outdoor reset operation stipulated in Section 303 of the 2007 Energy Act.
MANUAL RESET HIGH TEMP LIMIT	• If boiler outlet water temperature exceeds this temperature, the control will shut down the boiler and enter lockout. Changing this setting is NOT recommended.
WWSD TEMP	• WWSD stands for warm weather shut down. It means the boiler will not be allowed to fire if the outdoor temperature is greater than the WWSD setting. When the boiler is kept off because the outdoor temperature is above WWSD, the graphic display will show WWSD, and the boiler will remain in standby until the outdoor temperature drops below WWSD temperature. • WWSD does not apply to DHW systems or custom priorities. • The outdoor sensor must be installed to use this function.
ADJUST OUTDOOR	• Use this setting to calibrate the outdoor sensor when needed to compensate for variations in lead length, or for other factors that could affect total resistance in sensor circuit.
BLOWER CALIBRATION	• Use this function to re-calibrate the blower motor for optimal blower performance. NOTE: All calls for heat must be off and boiler must be in "Standby" to use this function.
RESET FACTORY DEFAULTS	• This screen has two options. • RESTART WIZARD keeps all contractor information, time and date, run times and errors, and boiler model, and allows the user to restart the wizard from the beginning. • RESET FACTORY DEFAULTS clears all information from the control including model number and returns the control to a factory received state.

PUMP SETTINGS Menus

Figure 89 PUMP SETTINGS options

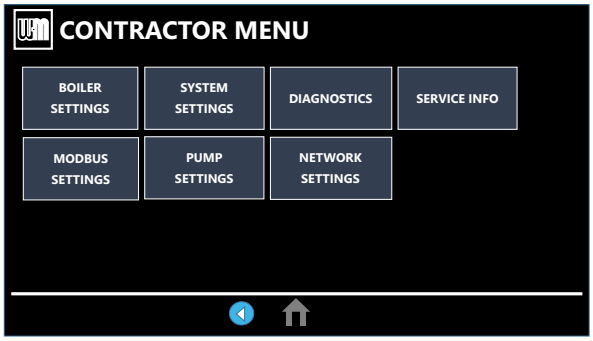

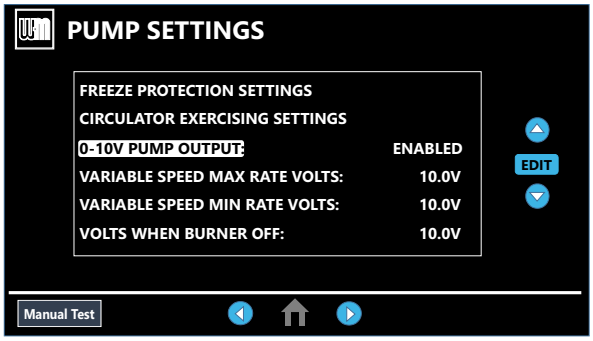

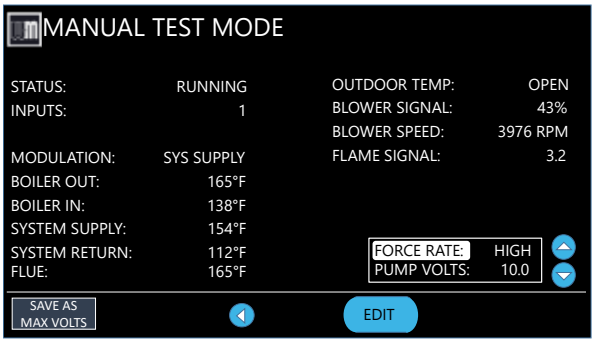

Menu Item	Purpose
FREEZE PROTECT CIRCS	• This function automatically fires the boiler at low fire and starts the circulators chosen if the heat exchanger sensors detect a temperature less than 45°F. Burner is turned on if temperature drops below 40°F. Circulators and burner turn off when the temperature rises above 48°F.
CIRCULATOR EXERCISING	• For each circulator, select whether you want the control to automatically start the circulator and run for 10 seconds for each 72-hour period of inactivity.
0-10V PUMP OUTPUT	• Enable or disable the 0-10 VDC output to be used for a 0-10 VDC variable speed boiler circulator. • NOTE: The 0-10 VDC output can only be used with one function at a time. Enabling it for one will disable for the remainder.
VARIABLE SPEED MAX/MIN RATE VOLTS	• Select the voltage required to be output when the boiler is at Max/Min Rate, respectively. The output will scale according to the bounds given. For inverse voltage curve pumps, Max can be set below Min. When using Manual Test Mode to set these parameters, force rate to High Fire to save the Variable Speed Max Rate Volts setting, and force rate to Low Fire to save the Variable Speed Min Rate Volts setting.
VOLTS WHEN BURNER OFF	• Select the voltage required for the 0-10V boiler pump to run at when the boiler is servicing a call for heat, but does not need to fire its burner. The pump also runs at this voltage when the boiler is in Standby, Pre-pump, Pre-purge and Post-purge/Post-pump states. It will transition to mirroring rate based on Variable Speed Max/Min Rate Volts constraints and the actual blower speed when in Ignition Speed state and all burner-active states.

Screens shown on these pages are typical only.
Actual screens depend on control settings chosen.

SYSTEM SETTINGS Menus

System Settings Menus Navigation

1. Access contractor menus by pressing the WM Logo for seven seconds from the home screen.
2. Select SYSTEM SETTINGS on the screen.
3. See Figure 90 for an explanation of control settings.

Figure 90 SYSTEM SETTINGS options

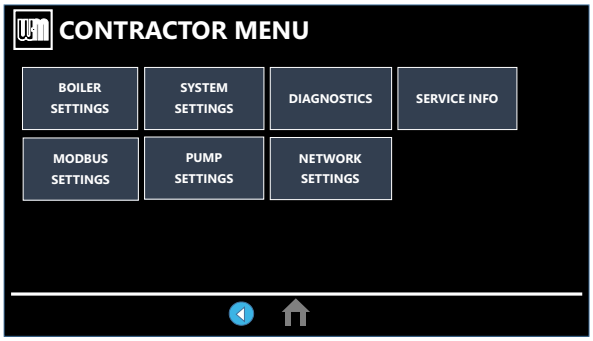

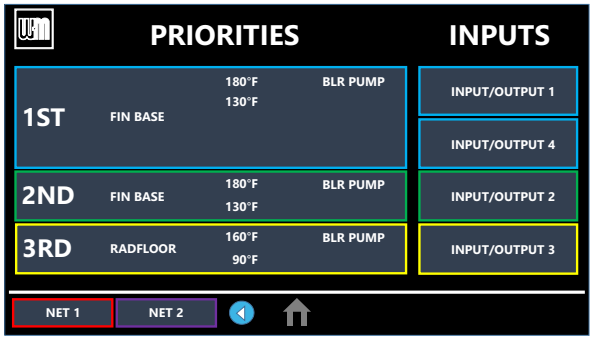

Menu Item	Purpose
INPUTS	• Press on any of the Input squares to navigate to the Input assignment screen. Assign priorities to inputs and the source of Input 2. • Custom name will appear above Input/output # when a name is entered.
PRIORITIES	• Press on any of the Priorities buttons to navigate to that priority settings. • Each box displays from left to right: the priority number, system type, Max Target Temp on top of Min Target Temp (when used), and populates BLR Pump and/or SYS PUMP when selected to run these during that priority. The color of the box corresponds to the color of the Input/output #. • See **page 110** (Boiler Priority menus).

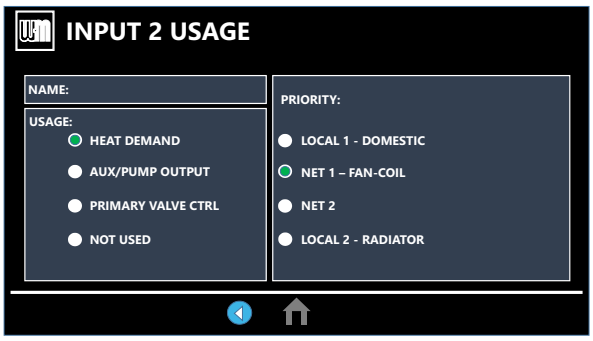

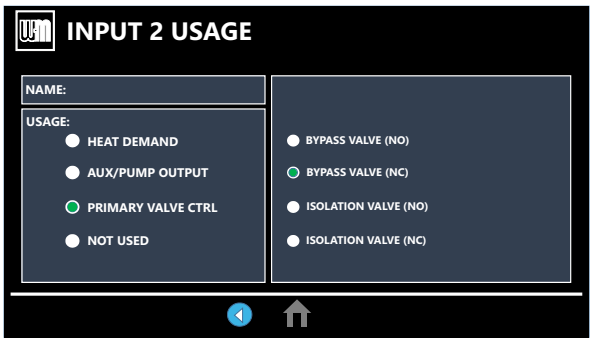

Menu Item	Purpose
NAME	• Give a name to the input/output you are assigning to help clarify the use of this priority for future reference.
USAGE	• Assign whether the input is used for a Heat Demand, Aux/pump output, Primary Valve Control, or not used.
PRIORITIES	• Assign which priority this input is linked to.

Screens shown on these pages are typical only.
Actual screens depend on control settings chosen.

BOILER PRIORITY Menus

Figure 91 Boiler PRIORITY options

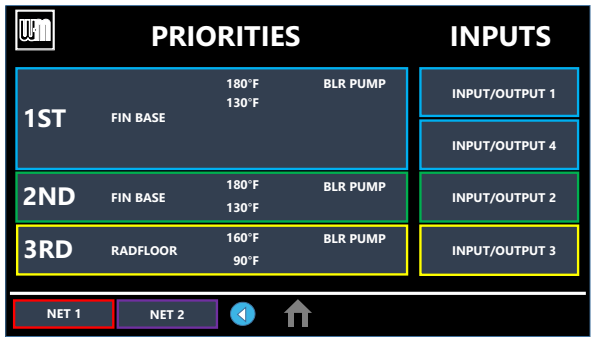

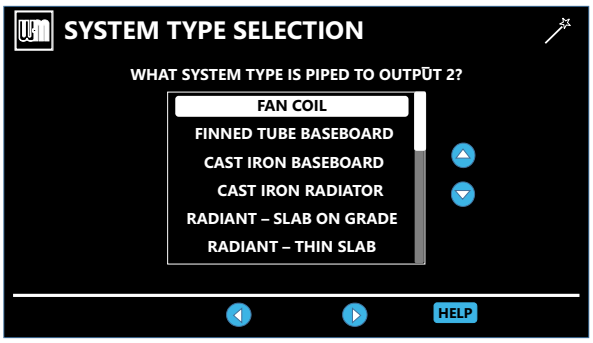

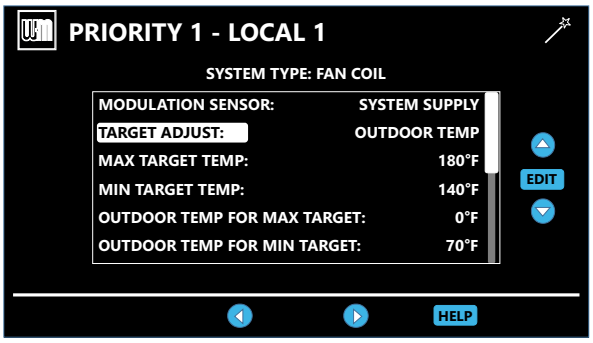

Menu Item	Purpose
SYSTEM TYPE	• Select the system type for this PRIORITY, based on the heat emitter type(s) in the system. Use the CUSTOM selection to set the control for a different system type. The factory preset values for Max Target Temp, MIN TARGET TEMP, Outdoor Temp for Min Target and OUTDOOR TEMP FOR MAX TARGET are chosen based on the normal best setting for the terminal units.
TARGET MODULATION SENSOR	• Choose SYSTEM SUPPLY or BOILER OUT to determine which will be the primary temperature sensor. The control will modulate boiler input to reach the TARGET temperature. (Default is SYSTEM SUPPLY only if sensor is attached.) If system sensors are not used, boiler defaults to using boiler outlet sensor in place of system sensor.
TARGET ADJUST	• Select how target temperature is calculated by control: NONE (no reset, fixed target temperature), 0-10V (target temperature based on analog input from remote source), Outdoor Temp (outdoor reset operation; default setting when an outdoor temperature sensor is attached).
MAX TARGET TEMP	• Set Max Target Temp to the required supply water temperature for the system at design maximum heat loss (typically 180°F for finned tube baseboard on new installations.)
MIN TARGET TEMP	• MIN TARGET TEMP should equal the desired minimum supply water temperature for the system. • This line is not shown on priorities configured as DHW system type or Heating system type, if outdoor temperature sensor not used.
OUTDOOR TEMP FOR MAX TARGET	• OUTDOOR TEMP FOR MAX TARGET means the outdoor temperature at which the target temperature reaches its maximum value (MAX TARGET TEMP). • OUTDOOR TEMP FOR MAX TARGET should equal the Outdoor Temp (outdoor design temperature) for the installation's location. • This line is not shown on priorities configured as DHW system type or Heating system type, if outdoor temperature sensor not used.
OUTDOOR TEMP FOR MIN TARGET	• OUTDOOR TEMP FOR MIN TARGET is the outdoor temperature at which the target temperature reaches its minimum (MIN TARGET TEMP). • This line is not shown on priorities configured as DHW system type or Heating system type, if outdoor temperature sensor not used.
VOLTAGE FOR MAX TARGET	• Only appears if Target Adjust or Source for Input 2 is set to 0-10V. For Target Adjust, this sets the voltage at which Max Target Temp temperature is requested. For Source on Input 2, this sets the voltage that corresponds to Max Rate.
VOLTAGE FOR MIN TARGET	• Only appears if Target Adjust or Source for Input 2 is set to 0-10V. For Target Adjust, this sets the voltage at which Min Target Temp temperature is requested. For Source on Input 2, this sets the voltage that corresponds to Min Rate.

BOILER PRIORITY Menus (continued)

Figure 92 Boiler PRIORITY options 2

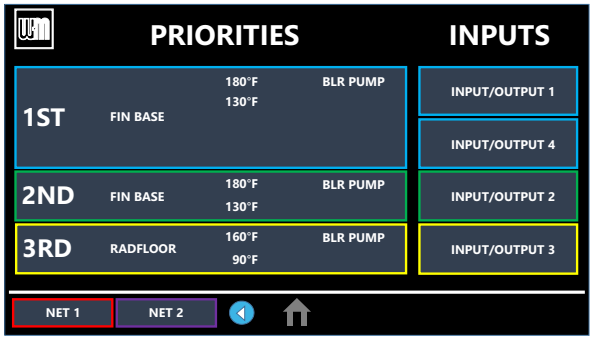

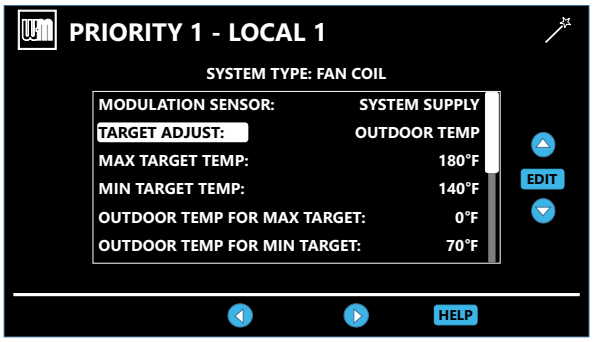

Menu Item	Purpose
COLD START ERROR	• At ignition, the difference between the Target temperature and the current temperature is compared to this value to decide the starting modulation rate once released to modulation. If the difference is less than or equal to this value the modulation rate will start at Min Rate. If it is greater than this value, the control will calculate a higher modulation starting rate.
BOOST TIME	• Every time the call for heat surpasses this duration of time the target temp will increase (boost) up 10°F to a maximum temperature of MAX TARGET TEMP.
SYSTEM ON DIFF	• This is the amount the temperature must drop below system target to begin network modulation routine. (This line may NOT appear, depending on TARGET ADJUST setting.)
SYSTEM OFF DIFF	• This is the amount the temperature must rise above system target to turn the boiler OFF.
MAX BLR TEMP	• If the boiler outlet temperature approaches [Max Boiler Temp – Boiler On Diff] before the system supply temperature reaches its target, the control will modulate the boiler based on the boiler outlet temperature. The boiler will cycle and modulate based on the boiler ON and OFF differential settings. (This line does NOT appear if Target Mod Sensor is set to Boiler Out).
BOILER ON DIFF	• This is the amount the temperature must drop below target (or Boiler Max) to turn the boiler ON.
BOILER OFF DIFF	• This is the amount the temperature must rise above target (or Boiler Max) to turn the boiler OFF.
MAX ON TIME	• Maximum time boiler will run on this priority if it is being asked to run on another priority. Will rotate among all priorities its being asked to run.
MIN ON TIME	• Minimum time the boiler will run on an existing priority before switching to a lower priority, or back to an existing higher priority. If a new higher priority is called during MIN ON TIME, the boiler will immediately switch to actively heat the higher priority.

Screens shown on these pages are typical only.
Actual screens depend on control settings chosen.

BOILER PRIORITY Menus (continued)

Figure 93 Boiler PRIORITY options 3

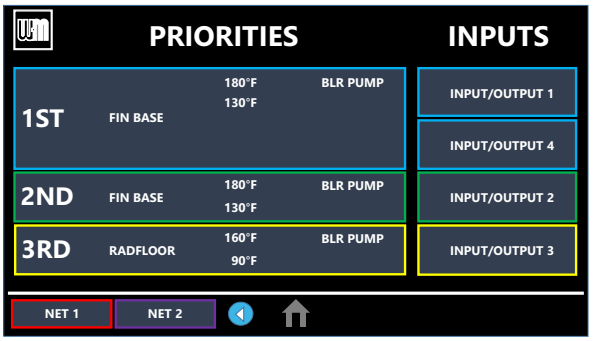

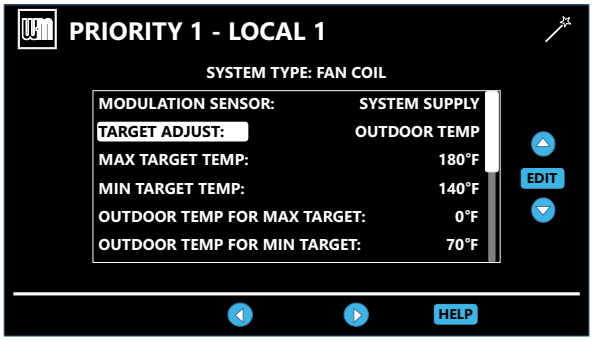

Menu Item	Purpose
RUN 0-10V BOILER PUMP	• The 0-10 VDC output will energize to run a variable speed boiler pump when selected.
RUN 120V BOILER PUMP	• Selects whether the 120V Boiler Pump is turned on while running on this priority.
RUN AUX PUMP/OUTPUT	• When set to YES, input/output pairs on any network boiler assigned as AUX PUMP/ OUTPUT -> ANY TT INPUT BY ITS PRIORITY, will activate. Set this to NO for priorities that do not need this AUX PUMP/OUTPUT to be active.
PRE PUMP	• Time associated PUMPS and AUX PUMP/ OUTPUT are run before entering prepurge.
POST PUMP	• Time associated PUMPS and AUX PUMP/ OUTPUT are run after the call for heat has ended and before switching to another call for heat.
MAX SYS BTUs	• See advanced manual.
MIN BOILERS	• See advanced manual.
MAX RATE	• Maximum rate this boiler will modulate up to while running on this priority.
MIN RATE	• Minimum rate this boiler will modulate down to while running on this priority.

BOILER PRIORITY Menus (continued)

Figure 94 Boiler PRIORITY options 4

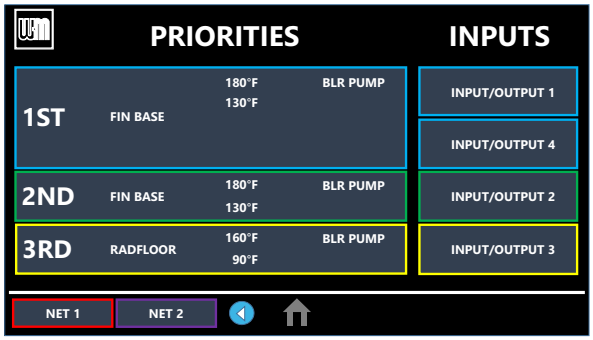

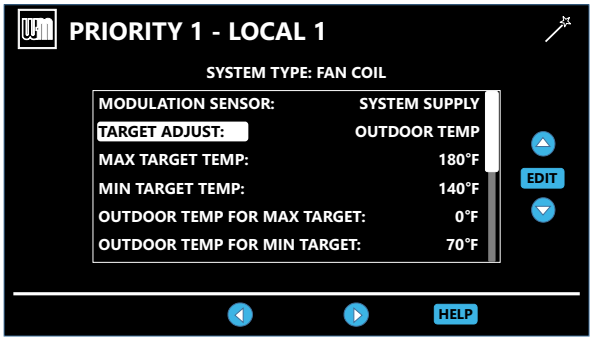

Menu Item	Purpose
ADD'L HEAT DEMAND ACTIVATE CONTACT	• If this is set to 1st: Immediately on a call for heat, the heat demand contacts close and the RESPONSE TIME timer starts. If the call for heat from this demand is still active at the end of the Response Time and the system has not reached [Target Temp - System On Diff], the boiler system will start. If the system temperature is within this range, the boiler system will not start unless the temperature drops below this value. The Add'l Heat Demand contact opens when the heat demand turns off. • If this is set to 2nd: The boiler system immediately starts a call for heat and the RESPONSE TIME timer. If the call for heat is still active when the RESPONSE TIME expires, the boiler will close its additional heat demand contact. • If this set to ODT: The boiler system will start based on the Outdoor Temperature, the activate contact below and above setpoint and the Outdoor Temp setpoint valve. • Timers reset when priorities are switched.
RESPONSE TIME	• Time to wait for system to respond before taking the Activate Contact action. If ACTIVATE CONTACT is OFF, this line does not appear.
TEMP DEPENDENT	• Selecting YES will require the System Supply Temperature to be below the Target temperature before it will activate the Additional Heat Demand contacts. Selecting YES will also activate the 0-10V output along side the contacts. Selecting NO will disregard System Supply Temperature and activate AHD contacts strictly according to the Activate Contact setting. NOTE: If no valid System Supply and Return sensor pair are detected the Temp Dependent YES setting cannot be used and the contact will be disabled until a valid sensor pair is detected.
OUTDOOR TEMPERATURE SETPOINT	• Selecting the outdoor temperature valve to be used in conjunction with the Activate Contact Below/Above Setpoint setting. NOTE: A valid outdoor temperature sensor must be detected to use this feature. If one is not detected, this feature will be temporarily disabled until one is found.
ACTIVATE CONTACT BELOW SETPOINT	• Select 1st to activate the contact before the boiler when below the Outdoor Temperature Setpoint and after the boiler when above. Select 2nd to activate the contact in reverse order. • Select OFF to disable the output when below the setpoint.
ACTIVATE CONTACT ABOVE SETPOINT	• Select 1st to activate the contact before the boiler when above the Outdoor Temperature Setpoint and after the boiler when below. Select 2nd to activate the contact in reverse order. • Select OFF to disable the output when above the setpoint.
MAX RATE VOLTAGE	• When blower modulation is at maximum the control will output this voltage from 0-10V output when using Additional Heat Demand.
MIN RATE VOLTAGE	• When blower modulation is at minimum, the control will output this voltage from 0-10V output when using Additional Heat Demand.

AUX Pump/Output

Table 8 Aux Pump/Output operation

Option	Activation Conditions	Suggested Uses
ALWAYS ON	• Output is always energized whenever the control is powered.	• Hot loop for seasonal boilers that are manually shut down at end of season and started up at start of heating season.
EXTERNAL SWITCH	• The output is energized on closure of an external switch wired to this input and is de-energized when the external switch opens.	• Hot loop for boilers whose CH is manually shut down at end of season and started up at start of heating season, but remain available for local calls (such as DHW).
OUTDOOR BELOW WWSD	• This output is energized only when outdoor temperature is below the WWSD setting (see BOILER SETTINGS menu). • This setting is non-selectable if WWSD is set to OFF or Outdoor Temp is not connected at initial boiler power. If Outdoor Below WWSD is already chosen and WWSD is later set to OFF, Outdoor Below WWSD will behave as Always On.	• Hot loop for boilers whose CH is automatically shut down based on outdoor temperature (inferred heat loss), but remain on for local calls (such as DHW).
ANY INPUT	• The assigned output is energized if there is an input closure on this boiler. • The assigned output will de-energize once there are; no input on this boiler, post-purge has finished and post-pump time has expired. • If the closed input is configured for a heat demand, its output will de-energize after post-purge and post-pump.	• Energize a system pump relay if pump must run during all heating calls.
INPUT PRIORITY SETTINGS	• The assigned output is energized if both of the following are true: 1. There is an input closure on this boiler. 2. RUN AUX PUMP/OUTPUT is set to YES for the priority assigned to the closed input. • The assigned output will de-energize once there are no input closures on any of the network boilers, post-purge has finished, and post-pump time has expired.	• Energize a system pump relay if pump must run only on some heat calls (such as systems with locally-connected DHW heating).
SYSTEM DAMPER	• The assigned output is energized when the boiler receives a call for heat and starts to pre-purge. • The assigned output is de-energized once the burner is off and post-purge is complete. • Energizes any time any boiler on the network receives a heating demand or AHD is activated.	• Use for interlocking with combustion air damper, flow switch, etc., when more than one boiler is connected/piped to one device
LOCAL DAMPER	• The assigned output is de-energized once the burner is off and post-purge is complete. • Only activates if this boiler is attempting to fire.	• Use for interlocking with combustion air damper, flow switch, etc., per individual boiler, separately operated from the remaining boilers in the system.

Table 9 System/Local Damper operation — start, run, and stop based on boiler status

Option	Standby	TT Closed	Pre-pump	Pre-purge	Burner Running	Post-purge	Post-pump	Standby	Comments
ANY INPUT OR INPUT PRIORITY SETTINGS	*OFF*	*ON* →						*OFF*	• See Table 8 for explanation of differences between the input options.
SYSTEM/ LOCAL DAMPER	*OFF*	*OFF*	*OFF*	*ON* →			*OFF*	*OFF*	—

DIAGNOSTICS Menu

Table 10 DIAGNOSTICS menu

Menu/Item	Comment
Temperatures	
Status	Current operating status of the boiler. Prepurge, Ignition, Name of the system Type being satisfied, post purge, Warm Weather Shut down, Trouble
Boiler Out1	Temperature of the first sensing element of the boiler's heat exchanger outlet sensor
Boiler Out2	Temperature of the second sensing element of the boiler's heat exchanger outlet sensor
Boiler In	Temperature of the boiler's heat exchanger inlet sensor
System Supply	Temperature of the system water after the boiler loop
System Return	Temperature of the system water returning to the boiler loop
Flue1	Temperature of the first sensing element of the boiler's flue gas sensor
Flue2	Temperature of the second sensing element of the boiler's flue gas sensor
Outdoor	Temperature of the remote outdoor air temperature sensor
Target Temperature	Current target temperature of the active priority.
Inputs	
Status	Current operating status of the boiler. Prepurge, Ignition, Name of the system Type being satisfied, post purge, Warm Weather Shut down, Trouble
Input 1	Call for heat status on Input 1
Input 2	Call for heat status on Input 2 (Input 2 can be TT1 or 0-10 VDC input)
Input 3	Call for heat status on Input 3
Input 4	Call for heat status on Input 4
0–10V Input	Voltage input for target adjust or modulation
Manual Limit	External manual limit on low voltage terminal strip
Auto Limit	External auto limit on low voltage terminal strip
Low Wtr Cutoff	Low water cutoff device (alternate)
Air P-Switch	Limit device (inside boiler jacket) that will shut off the boiler if flue pressure becomes too high
Closure Switch	J18 jumper circuit closed or open (flow switch, CAD, etc.)
Blower Speed	Feedback from blower
Flame Signal	Number indicating the presence and quality of the flame used to shut down or boost the boiler
Outputs	
Status	Current operating status of the boiler. Prepurge, Ignition, Name of the system Type being satisfied, post purge, Warm Weather Shut down, Trouble
Gas Valve	Control's gas valve circuit status
Circulator 1	Control's circulator 1 relay status
Circulator 2	Control's circulator 2 relay status
Circulator 3	Control's circulator 3 relay status
Circulator 4	Control's circulator 4 relay status
Boiler Circ	Boiler's circulator
120V Boiler Pump	Used to control the boiler's 120V Boiler Pump power
0–10V Output	0–10V output signal used for external device or variable speed boiler pump
Blower Signal	Control's signal controlling the blower speed
Additional Heat Demand	Additional heat demand contact status
Alarm	Alarm contact status

DIAGNOSTICS Menu (continued)

Table 11 DIAGNOSTICS menu

Menu/Item	Comment
Run Times	
Burner Time	Displays cumulative time the burner has been active (can be increased by user)
Input 1 Time	Displays cumulative time that Input 1 has been closed
Input 2 Time	Displays cumulative time that Input 2 has been closed (Or 0-10V ≥ 1 volt)
Input 3 Time	Displays cumulative time that Input 3 has been closed
Input 4 Time	Displays cumulative time that Input 4 has been closed
Ignition Count:	Displays total number of successful ignitions
Last 5 Proof of Ignition:	Displays last 5 Proof of Ignition flame valves read by the control
Last 5 Stabilization:	Displays last 5 Stabilization flame valves read by the control
Last Factory Reset:	Shows the time/date stamp of the of the last factory reset performed
Last Power Cycle:	Shows the time/date stamp of the last known power cycle
TO RESET ALL HISTORY COUNTERS TO ZERO:	
To reset all history counters to zero: Enter the FAULT HISTORY menu, then press the reset button. This will cause ALL history to be deleted. To maintain history, set counters individually.	
Fault History	
Ignition Retries	This indicates the total number ignition retries. This increments when the boiler shuts down the burner and attempts to re-ignite due to poor flame quality or loss of flame/failure to light. It is recommended to reset this when ignition related maintenance occurs (igniter, blower, gas valve, etc.) Reset by selecting the line and pressing the Reset button.
Manual Reset Cnt	Displays number of manual reset lockouts since last cleared
Auto Reset Cnt	Displays number of auto reset lockouts since last cleared
Lockout History 1 - 6	Choose this to view the second most recent error recorded
Fault Type	Displays the type of fault that occurred
Time	Displays time that lockout occurred
Date	Displays date that lockout occurred
Status	Displays what the status of the boiler was at the time of the error
Temperatures	Choose this to view the Boiler Temperatures at the time of the error
Inputs	Choose this to view the status of the Boiler Inputs at the time of the error
Outputs	Choose this to view the status of the Boiler Outputs at the time of the error
Manual Test Mode	
Status	Current operating status of the boiler. Prepurge, Ignition, Name of the system Type being satisfied, post purge, Warm Weather Shut down, Trouble
Inputs	Displays which inputs are presently calling for heat
Target Temp	Calculated target temperature based on outdoor temp or the max target if no ODR
Modulation	Displays what sensor the boiler is using to modulate from. May also indicate reason for boiler rate self-limiting.
Boiler Out	Temperature of the outlet sensor on the boiler heat exchanger
Boiler In	Temperature of the inlet sensor on the boiler heat exchanger
System Supply	Temperature of the system water after the boiler loop
System Return	Temperature of the system water returning to the boiler loop
Flue	Temperature of flue gases
Outdoor	Temperature of outdoor air
Blower Signal	Control's signal controlling the blower speed
0–10V Output	0–10V output signal used for external device or variable speed boiler pump
Blower Speed	Blower's feedback to the control
Flame Signal	Number indicating the presence and quality of the flame used to shut down or boost the boiler
Force Rate	Used to manually force a rate during a call for heat. Choose auto for normal operation
Manual Reset	
Reset selected condition	

SERVICE Menus

Table 12 SERVICE menus navigation

Service Info	Comment
Name	Contractor name to appear in maintenance reminders and during lockouts
Phone	Contractor phone number
Model	Displays the boiler model selected in the boiler setup
CP Number	Enter the CP# of the boiler
Installed	Enter the date the boiler was installed
Last Maintenance Performed	Date automatically entered when Reset Reminder is chosen by contractor
Next Maintenance Due	Date automatically calculated when Reset Reminder is selected by contractor
Interval Settings	Contractor selects maintenance reminder frequency based on service history
Reset Reminder	Contractor selects this to update Last maintenance Date and Next Date. Homeowner uses this to ignore the reminder and update only the Next Date.
Last Calibration Date	Displays date of last calibration preformed.

SERVICE INFO

Use this section to enter contractor's information, Consumer Protection (CP) number, install date and to enter an automatic notice for maintenance (default is 12 months). Because this shows on the display, it is an automatic means of notifying the homeowner of need for scheduled maintenance by the technician. Select RESET REMINDER to reset for the next maintenance date.

Additional Instructions

For all additional instructions for startup, operation, and maintenance of the boiler, refer to the SVF 500/600 Boiler manual (part number 550-100-273).

Startup - Fill The System

Clean System to Remove Sediment

1. You must thoroughly flush the system (without boiler connected) to remove sediment. The high-efficiency heat exchanger can be damaged by buildup or corrosion due to sediment.
2. For zoned systems, flush each zone separately through a purge valve. (If purge valves and isolation valves are not already installed, install them to properly clean the system.)
3. Flush system until water runs clean and you are sure piping is free of sediment.

WARNING

- Do not use petroleum-based cleaning or sealing compounds in boiler system. Damage to elastomer seals and gaskets in system could occur, resulting in substantial property damage.
- Before filling the boiler and system with water, verify the following. **DO NOT fill with softened water. Boiler corrosion can occur.**
- Failure to comply could result in boiler failure or unreliable operation.

4

Water Chemistry

Water pH between 7.0 and 8.5

1. Maintain boiler water pH between 7.0 and 8.5. Check with litmus paper or have chemically analyzed by water treatment company.
2. If pH differs from above, consult local water treatment company for treatment needed.

Hardness less than 7 grains

1. Consult local water treatment companies for unusually hard water areas (above 7 grains hardness).

Chloride Concentration Must be LESS THAN 200 ppm

1. Filling with chlorinated fresh water should be acceptable since drinking water chloride levels are typically less than 5 ppm.
2. Do not use the boiler to directly heat swimming pool or spa water.
3. Do not fill boiler or operate with water containing chloride in excess of 200 ppm.

WARNING

Verify that the water chemistry meets the limitations and requirements of all other equipment in the system.

Antifreeze

1. Use only antifreeze listed by Weil-McLain as suitable for use with **EVG** Gas Boilers. See **Figure 125, page 167** for information.
2. See **"Accessory Parts"** at the end of this manual for Weil-McLain part numbers to obtain antifreeze through a Weil-McLain distributor.

Use the Correct Amount of Antifreeze

1. Determine the freezing temperature needed (to protect against lowest likely temperature the system water will encounter).
2. Find the antifreeze concentration by volume needed for this temperature from the antifreeze manufacturer's data on the antifreeze container.
3. Add up the volume (gallons) of all system piping and components, including the expansion tank and boiler.
   a. Boiler water content is listed in **Figure 155, page 194** and **Figure 156, page 195** .
   b. Remember to include expansion tank water content.
4. Multiply this volume by the (percent) antifreeze needed to find the number of gallons of antifreeze to add.

Fill and Test Water System

1. Fill system only after ensuring the water meets the requirements of this manual.
2. Close manual and automatic air vents and boiler drain valve.
3. Fill to correct system pressure. Correct pressure will vary with each application.
   a. Typical cold water fill pressure for a residential system is 12 psi.
   b. Pressure will rise when boiler is turned on and system water temperature increases. Operating pressure must never exceed 24 PSIG.
4. At initial fill and during boiler startup and testing, check system thoroughly for any leaks. Repair all leaks before proceeding further.

WARNING

Eliminate all system leaks. Continual fresh make-up water will reduce boiler life. Minerals can build up in the heat exchanger, reducing heat transfer, overheating heat exchanger, and causing heat exchanger failure.

Purge Air From Water System

1. Connect a hose to the purge valve (see purge/drain valves, item 11, in piping diagrams beginning on **page 65**). Route hose to an area where water can drain and be seen.
2. Close the boiler or system isolation valve between the purge valve and fill connection to the system.
3. Close zone isolation valves.
4. Open quick-fill valve on cold water make-up line.
5. Open purge valve.
6. One zone at a time, open the isolation valves. Allow water to run through the zone, pushing out the air. Run until no noticeable air flow is present. Close the zone isolation valves and proceed with the next zone. Follow this procedure until all zones are purged. Follow the same procedure to purge air from the boiler and its internal piping.

Startup - Fill The System (continued)

7. Close the quick-fill water valve and purge valve and remove the hose. Open all isolation valves. Watch that system pressure rises to correct cold-fill pressure.
8. After the system has operated for a while, eliminate any residual air by using the manual air vents located throughout the system.
9. If purge valves are not installed in system, open manual air vents in system one at a time, beginning with lowest floor. Close vent when water squirts out. Repeat with remaining vents.
10. Open automatic air vent (diaphragm-type or bladder-type expansion tank systems only) one turn.
11. Starting on the lowest floor, open air vents one at a time until water squirts out.
12. Repeat with remaining vents.
13. Refill to correct pressure.

WARNING

X100 Inhibitor is Required

1. It is required that the **Evergreen® Pro** boiler have Sentinel X100 added to the system to prevent damage to the boilers' heat exchanger. See **"Replacement Parts"** beginning on **page 168** for re-ordering information.
2. After filling the system as directed in these instructions, inject X100 inhibitor concentrate into the system, or fill with the X100 in its liquid form, following the instructions on the tube or container.
3. After adding the inhibitor to the system, allow time for the water to circulate and mix. Then check the inhibitor level. Add additional inhibitor if necessary.
4. See separate instructions or Weil-McLain website for suggested guidelines to determine how much inhibitor to use.

Check/Verify Water Chemistry

1. The system may have residual substances that could affect water chemistry.
2. After the system has been filled and leak tested, verify water pH and chloride concentrations are acceptable.
3. Verify antifreeze concentration, if used.
4. Follow the instructions on the Sentinel test kit to sample the system water and verify inhibitor concentration.

Check Inhibitor Concentration Annually

1. Test the pH of a sample of system water at least annually. The pH of the water mixture must be between 7.0 and 8.5. (Or use the Sentinel inhibitor test kit to check concentration.)
2. If pH is outside this range (or inhibitor test kit indicates low level), the inhibitor level may not be sufficient to prevent corrosion.
3. Test antifreeze concentration.

WARNING

Test antifreeze concentration at least annually. If concentration is low, add antifreeze or drain system and refill with correct mixture.

4. Follow instructions on antifreeze container to determine the amount of antifreeze needed. **DO NOT** exceed 50% by volume concentration of antifreeze.
5. Check inhibitor level after adjustments are made.

Freeze Protection (if used)

WARNING

- Follow these guidelines to prevent possibility of severe personal injury, death or substantial property damage:
- **Use only the products listed by Weil-McLain for use with this boiler. See page 166 for information.**
- **Thoroughly flush any system that has used glycol** before installing the new EVG boiler.
- **Review the material safety data sheets (MSDS)** are available online. The MSDS contains information on potential hazards and first aid procedures for exposure or ingestion.
- **Check antifreeze inhibitor level at least annually**. Glycol concentration and inhibitor levels may change over time. Add antifreeze to increase concentration if necessary. Add inhibitor as needed to bring to acceptable level, using inhibitor test kit to verify.
- In addition to antifreeze and inhibitor, use and maintain minimum level of Sentinel X100 inhibitor as directed on this page.
- If using freeze protection fluid with automatic fill, **install a water meter to monitor water make-up**. Freeze protection fluid may leak before the water begins to leak, causing concentration to drop, reducing the freeze protection level.
- **DO NOT exceed 50% antifreeze by volume**. Antifreeze moves more sluggishly than water and can interfere with heat transfer. At antifreeze concentrations higher than 50%, sludge can develop in the boiler, potentially causing damage to the heat exchanger.
- **Clean the system before filling**. Always drain and flush the system thoroughly before filling with antifreeze. Sludge, iron oxide deposits and other sediment in the system inhibit flow and can cause rapid breakdown of inhibitors.
- Use only antifreeze recommended by Weil-McLain.

NOTICE

Weil-McLain provides information for application of the antifreeze products listed in this document only for use in Weil-McLain boilers. Do not apply these products or instructions for other applications. Local codes may require a backflow preventer or actual disconnection from city water supply.

Startup - Final Checks

WARNING

Check for Gas Leaks

- Before starting the boiler, and during initial operation, use a leak detector or smell near the floor and around the boiler for gas odorant or any unusual odor. Remove boiler jacket door and smell the interior of the boiler jacket. **Do not proceed with startup if there is any indication of a gas leak. Repair any leak at once**.
- **DO NOT adjust or attempt to measure gas valve outlet pressure.** The gas valve is factory-set for the correct outlet pressure. This setting is suitable for natural gas and propane, requiring no field adjustment. Attempting to alter or measure the gas valve outlet pressure could result in damage to the valve, causing potential severe personal injury, death or substantial property damage.
- **Propane boilers only** - Your propane supplier mixes an odorant with the propane to make its presence detectable. In some instances, the odorant can fade, and the gas may no longer have an odor. Before startup (and periodically thereafter), have the propane supplier verify the correct odorant level in the gas.

Check Thermostat Circuits

1. Disconnect all wires connected to the Inputs (see Field Wiring beginning on **page 74** for low voltage terminal locations and application information). Mark the wires before removing to avoid wiring errors when re-connecting them.
2. Connect a voltmeter across each pair of incoming wires. Close each thermostat, zone valve and relay in the external circuits one at a time and check the voltmeter reading across the incoming wires.
3. **There should NEVER be a voltage reading.**
4. If a voltage reading is measured across the incoming wires, check and correct the external wiring.

WARNING

DO NOT connect the EVG thermostat terminals to 3-wire zone valves. This could cause control damage.

5. Once the external thermostat circuit wiring is checked and corrected if necessary, reconnect the external thermostat circuit wires.

Inspect/Fill Condensate System

Inspect/Check Condensate Lines And Fittings

Remove floor stand front access panel to access the condensate trap for the 110/155. For the 220-399 remove the front door.

Inspect the condensate drain line, condensate PVC fittings and condensate trap. (See **page 69** and **page 70** for component locations.)

Fill Condensate Trap with Water

1. Remove test port cap on vent adapter (see **Figure 95**).
2. Pour clean water into test port until condensate trap is filled.
3. Reinstall test port cap on vent adapter.

Figure 95 Test port cap on vent adapter

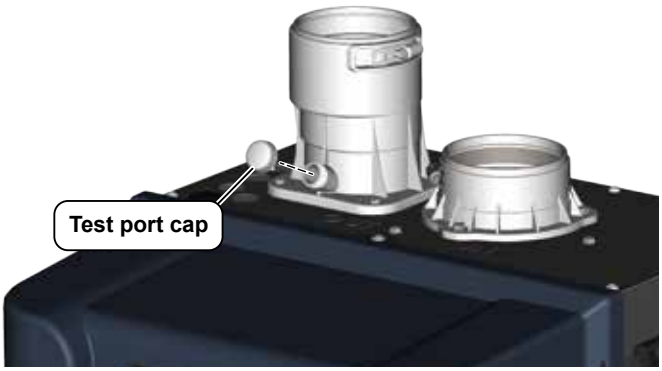

WARNING

The condensate trap must be filled with water during all times of boiler operation to avoid flue gas emission from the condensate drain line. Failure to fill the trap could result in severe personal injury or death.

Startup - Final Checks (continued)

Final Checks Before Starting Boiler

- ❑ Read the instructions to adjust and set up the control.
- ❑ Verify that the boiler model is set correctly in the control, and that it displays correctly.
- ❑ Verify that the boiler and system are full of water and all system components are correctly set for operation.
- ❑ Verify that condensate trap is filled with water.
- ❑ Verify electrical connections are correct and securely attached.
- ❑ Inspect vent piping and air piping for signs of deterioration from corrosion, physical damage or sagging. Verify air piping and vent piping are intact and correctly installed per this manual.

To Start the Boiler

1. Apply power to the boiler via the service switch.
2. Follow the Operating Instructions, **Figure 96, page 123**.
3. The control display will show installed sensors when first powered. Make sure the right sensors are detected and the correct boiler model is identified. If not, determine the cause and correct before proceeding.

If Boiler Does Not Start Correctly

1. Check for loose connections, blown fuse or service switch off?
2. Are external limit controls (if used) open? Is boiler water temperature above 200°F?
3. Are thermostats set below room temperature?
4. Is gas turned on at meter and boiler?
5. Is incoming gas pressure less than the minimum values given on **page 33**?
6. Are EVG control settings correct for the application?
7. Is the warm weather shutdown activated?
8. If none of the above corrects the problem, refer to Troubleshooting, beginning on **page 153**.

❑ Check System and Boiler

❑ Check Water Piping

1. Check system piping for leaks. If found, shut down boiler and repair immediately. (See WARNING on **page 118** regarding failure to repair leaks.)
2. Vent any remaining air from system using manual vents. Air in the system will interfere with circulation and cause heat distribution problems and noise.

❑ Check Vent Piping and Air Piping

1. Check for gas-tight seal at every connection and seam of air piping and vent piping.

⚠ WARNING

Venting system must be sealed gas-tight to prevent flue gas spillage and carbon monoxide emissions which will result in severe personal injury or death.

❑ Check Gas Piping

1. Check around the boiler and inside the boiler jacket for gas odor following the procedure of **page 34** of this manual.

⚠ WARNING

If you discover evidence of any gas leak, shut down the boiler at once. Find the leak source with bubble test and repair immediately. Do not start boiler again until corrected. Failure to comply could result in severe personal injury, death or substantial property damage.

❑ Propane Boilers - Verify Conversion

1. Verify boiler has been converted for propane. See **page 22** for EVG 110, **page 25** for EVG 155 or **page 25** for EVG 220-399.

⚠ WARNING

DO NOT attempt to measure gas valve outlet pressure

- DO NOT adjust or attempt to measure gas valve outlet pressure. The gas valve is factory-set for the correct outlet pressure. This setting is suitable for natural gas and propane, requiring no field adjustment.
- Attempting to alter or measure the gas valve outlet pressure could result in damage to the valve, causing potential severe personal injury, death or substantial property damage.
- Evergreen® Pro boilers are shipped ready to operate on natural gas ONLY.
- Failure to comply could result in severe personal injury, death or substantial property damage.

❑ Check Flame & Combustion with Instruments

1. Initiate a call for heat on one of the thermostat inputs.
2. Access the EVG control installer menus by pressing and holding the UP and DOWN arrow keys for seven seconds.
3. Make sure the Max firing rate is set to the maximum given in **Figure 104, page 134**. If not, adjust as necessary. Then navigate to DIAGNOSTICS - Manual test mode (see **Table 10, page 115**) and force the firing rate to HIGH (high fire).
4. Look at the flame through the flame inspection window. The high fire flame should be blue and should be stable. The burner surface should be covered with orange dots.

Startup - Final Checks (continued)

5. **Insert combustion analyzer probe** - Remove test port cap on vent adapter (see **page 120**) and insert a combustion test probe.
6. Test for CO_2 (or O_2) and for CO. The CO_2 values must comply with **Figure 99, page 125**. If results are acceptable, proceed to step 7. **IF NOT**, follow the instructions under **"Throttle Screw Adjustment" on page 124**, **"Throttle Screw Adjustment" on page 125** or **"Gas Valve Adjustment - 220-399" on page 126** to set the throttle screw position. See **WARNING** under **"Gas Valve Adjustment - 220-399" on page 126**.
7. Measure natural gas input:
   a. Operate boiler 10 minutes. Turn off other appliances.
   b. At natural gas meter, measure time (in seconds) required to use one cubic foot of gas.
   c. Calculate gas input:

$$\frac{3600 \times 1000}{\text{number of seconds from step b}} = \text{Btuh}$$

   d. Btuh calculated should approximate input rating on boiler rating label.
8. Use the control display to navigate to Manual test mode (see **Figure 85, page 97**) and force the firing rate to LOW (low fire).
9. Look at the flame through the flame inspection window. The low fire flame should be stable and evenly distributed over burner surface with a uniform orange color.
10. Repeat the combustion test as instructed in the previous steps.
11. Use the control display to navigate to Manual test mode (see **Figure 85, page 97**) and force the firing rate to AUTO (normal operation).
12. Reinstall test port cap on the vent adapter.

⚠ WARNING

You must reinstall the test port cap to prevent flue gas spillage into the boiler enclosure. Failure to comply could result in severe personal injury, death or substantial property damage.

Startup - Final Checks (continued)

Figure 96 Operating instructions (WARNING - Verify that the control is set for the correct boiler model before proceeding.)

FOR YOUR SAFETY — READ BEFORE OPERATING

WARNING If you do not follow these instructions exactly, a fire or explosion may result causing property damage, personal injury or loss of life.

A. This appliance does not have a pilot. It is equipped with an ignition device which automatically lights the burner. Do not try to light the burner by hand.

B. Before OPERATING, smell all around the appliance area for gas. Be sure to smell next to the floor because some gas is heavier than air and will settle on the floor. See below.

C. Use only your hand to turn the gas control knob. Never use tools. If the knob will not turn by hand, don't try to repair it, call a qualified service technician. Force or attempted repair may result in a fire or explosion.

D. Do not use this appliance if any part has been under water. Immediately call a qualified service technician to inspect the appliance and to replace any part of the control system and any gas control, which has been under water.

WHAT TO DO IF YOU SMELL GAS

- Do not try to light any appliance.
- Do not touch any electric switch; do not use any phone in your building.
- Immediately call your gas supplier from a neighbor's phone. Follow the gas supplier's instructions.
- If you cannot reach your gas supplier, call the fire department.

OPERATING INSTRUCTIONS

1. **STOP!** Read the safety information above on this label. This appliance is equipped with an ignition device which automatically lights the burner. Do not try to light the burner by hand.
2. Set room thermostat(s) to lowest setting.
3. Turn OFF all electrical power to the appliance.
4. Locate boiler manual gas valve (in the gas piping connected to the boiler).
5. Turn boiler manual gas valve knob counterclockwise ↶ to OPEN gas supply.
6. Wait five (5) minutes to clear out any gas. Then smell for gas, including near the floor.
7. If you smell gas, **STOP!** Turn the boiler manual gas valve to OFF. Then follow WHAT TO DO IF YOU SMELL GAS, above. If you don't smell gas, go to step 8, below.
8. Turn ON all electrical power to the appliance.
9. Set thermostat(s) to desired setting.
10. The boiler display will show symbols and/or text describing the status of the boiler as it proceeds through its operating sequence. "Standby" status means the burner is off.
11. If the appliance will not operate when there is a call for heat and piping is not hot, follow the instructions "To Turn Off Gas To Appliance" below and call your service technician or gas supplier.

Gas valve CLOSED

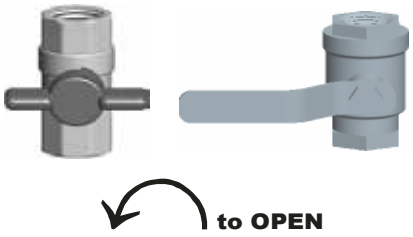

Gas valve OPEN

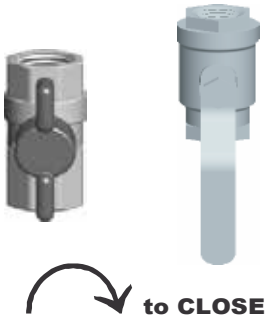

TO TURN OFF GAS TO THE APPLIANCE

1. Set room thermostats to lowest setting.
2. Turn OFF all electrical power to the appliance.
3. Turn boiler manual gas valve knob clockwise ↷ to close gas supply.

550-101-264 (0614)

4

Startup - Final Checks (continued)

WARNING

For 110/155, if combustion at either high or low fire is outside the range given in **Figure 99, page 125**, follow the procedure given on this page or **page 125** for adjusting the combustion system. If adjustment does not correct the problem, then shut down the boiler and contact your local WM Technologies representative. The combustion system adjustment must be done only by a qualified technician, using calibrated test instruments. Failure to comply could result in severe personal injury, death or substantial property damage.

Throttle Screw Adjustment

EVG 110 ONLY

WARNING

DO NOT attempt to adjust the throttle screw unless by a qualified technician, and with the use of calibrated combustion test instruments. Adjust the throttle screw only as needed to meet the combustion values given in **Figure 99, page 125**.

1. Throttle screw adjustment is **only necessary** if specified elsewhere in this manual or if combustion tests indicate the need, as explained under **"Check Flame & Combustion with Instruments" on page 121**.
2. Boiler behavior that might indicate a need to check combustion values at high fire (as per **page 121**) to verify boiler is in adjustment include: difficulty igniting, poor flame stability at low fire, combustion noise or high carbon monoxide values.
3. Combustion readings must be taken at both high fire and low fire. DO NOT attempt an adjustment of the throttle screw at low fire. Just check the combustion values.
4. See **Figure 97** for location of the **EVG 110** throttle screw.

CAUTION

Adjust the throttle screw in small movements.

5. Make sure the Max firing rate is set to the maximum and confirm the RPM value during operation given in **Figure 104, page 134**. If not, adjust as necessary. Then navigate to DIAGNOSTICS - Manual test mode (see **Figure 83, page 95**) and force the firing rate to HIGH (high fire). After the boiler has had time to stabilize, take a CO_2 reading. If result is not acceptable, do the following:
   a. If the CO_2 is HIGH, turn the throttle screw CLOCKWISE to lower the input. Allow the boiler to stabilize and take another reading. Continue until the desired CO_2 value is achieved.
   b. If the CO_2 is LOW, turn the throttle screw COUNTERCLOCKWISE to increase the input. Allow the boiler to stabilize and take another reading. Continue until the desired CO_2 value is achieved.
   c. Confirm that the CO is within limits.
6. Lock the boiler into low fire. Check the combustion readings. If results are acceptable at low fire, verify high fire readings again. Restore firing rate to AUTO. DO NOT adjust throttle on low fire.
7. Consult your local Weil-McLain representative if acceptable results cannot be obtained for both high and low fire.

Figure 97 **EVG 110** Throttle screw (ONLY for use by a qualified technician, using calibrated combustion test instruments)

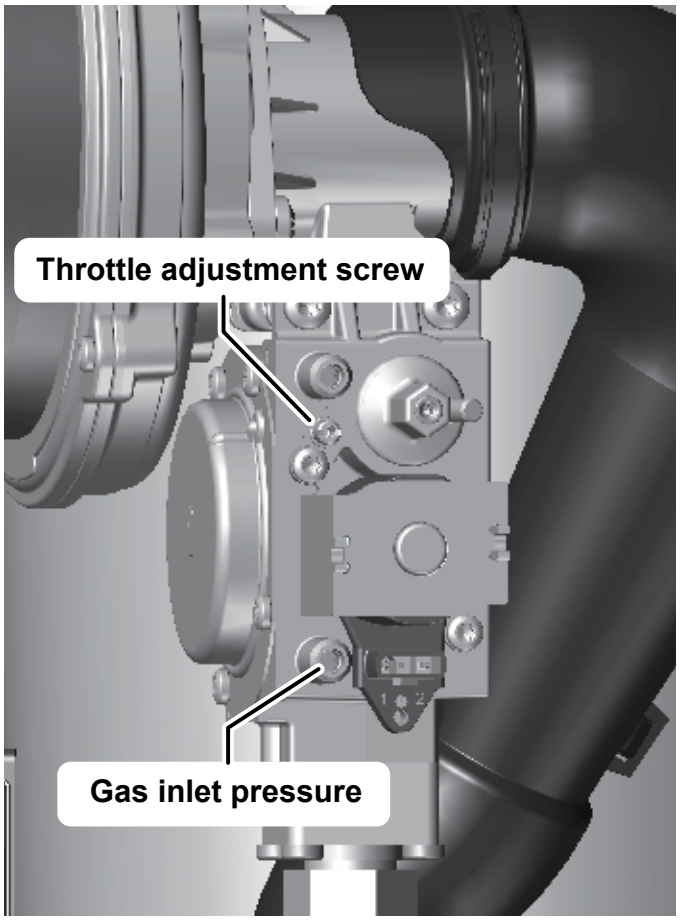

Startup - Final Checks (continued)

Throttle Screw Adjustment

EVG 155 ONLY

WARNING

DO NOT attempt to adjust the throttle screw unless by a qualified technician, and with the use of calibrated combustion test instruments. Adjust the throttle screw only as needed to meet the combustion values given in **Figure 99**.

1. Throttle screw adjustment is **only necessary** when specified elsewhere in this manual or when combustion tests indicate the need, as explained under **"Check Flame & Combustion with Instruments" on page 121.**
2. Boiler behavior that might indicate a need to check combustion values at high fire (as per **page 121**) to verify boiler is in adjustment include: difficulty igniting, poor flame stability at low fire, combustion noise or high carbon monoxide values.
3. Combustion readings must be taken at both high fire and low fire. DO NOT attempt an adjustment of the throttle screw at low fire. Just check the combustion values.
4. See **Figure 98** for location of the **EVG 155** throttle screw.

Figure 98 EVG 155 Throttle screw (ONLY for use by a qualified technician, using calibrated combustion test instruments)

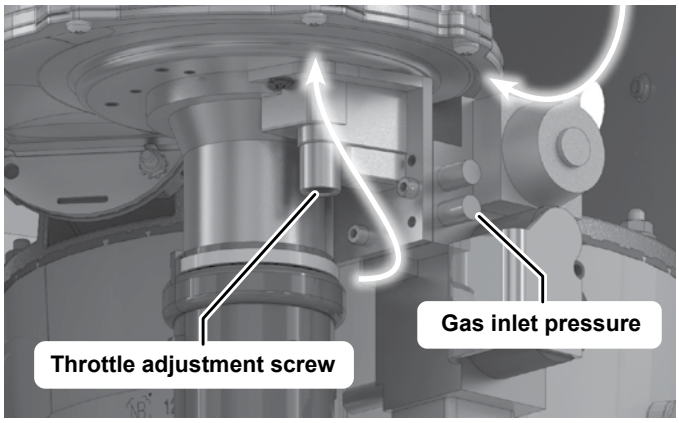

CAUTION

Adjust the throttle screw in small movements.

5. Make sure the Max firing rate is set to the maximum and confirm the RPM value during operation given in **Figure 104, page 134**. If not, adjust as necessary. Then navigate to DIAGNOSTICS - Manual test mode (see **Figure 83, page 95**) and force the firing rate to HIGH (high fire). After the boiler has had time to stabilize, take a CO_2 reading.
   a. If the CO_2 is HIGH, turn the throttle screw CLOCKWISE to lower the input. Allow the boiler to stabilize and take another reading. Continue until the desired CO_2 value is achieved.
   b. If the CO_2 is LOW, turn the throttle screw COUNTERCLOCKWISE to increase the input. Allow the boiler to stabilize and take another reading. Continue until the desired CO_2 value is achieved.
   c. Confirm that the CO is within limits.
6. Lock the boiler into low fire. Check the combustion readings. If results are acceptable at low fire, verify high fire readings again. Restore firing rate to AUTO. DO NOT adjust throttle on low fire.
7. Consult your local Weil-McLain representative if acceptable results cannot be obtained for both high and low fire.

Figure 99 Acceptable combustion values - measured values must be within the ranges given below

Boiler model EVG	Fuel	High fire		Low fire	
		% CO_2	CO ppm	% CO_2	CO ppm
110	NG	9.5 +/– 0.5	< 150	9.0 +/– 0.5	< 50
	LP	10.5 +/– 0.5	< 150	10.0 +/– 0.5	< 50
155	NG	9.25 +/– 1.0	< 150	8.75 +/– 1.0	< 50
	LP	10.25 +/– 0.5	< 150	9.75 +/– 0.5	< 50
220	NG	9.25 ± 0.5	< 100	8.75 ± 0.5	< 50
	LP	10.25 ± 0.25	< 120	9.75 ± 0.25	< 50
299/300	NG	9.25 ± 0.5	< 100	8.75 ± 0.5	< 50
	LP	10.75 ± 0.5	< 120	10.25 ± 0.5	< 50
399	NG	9.25 ± 0.5	< 100	8.75 ± 0.5	< 50
	LP	10.75 ± 0.5	< 120	10.25 ± 0.5	< 50

- **Values above are with the boiler jacket door removed**. Values will increase about 0.2% once the jacket door is reinstalled.
- **REINSTALL** the boiler jacket door after completing service.
- Values above are for altitudes up to 5,500 feet. For higher altitudes, CO_2 may be slightly lower and CO slightly higher.
- Low fire CO_2 should be equal to or less than High fire CO_2.

* **EVG 220-399;** The valve may vary with conditions, but must be 0.5% to 0.75% lower than the high fire CO_2 value.

4

Startup - Final Checks (continued)

Gas Valve Adjustment - 220-399

WARNING

DO NOT attempt to adjust the throttle or offset screw unless done by a qualified technician, and with the use of calibrated combustion test instruments. Adjust the throttle or offset screw only as needed to meet the combustion values given in **Figure 100**. Must confirm correct low fire RPM before making any adjustments to Offset regulating screw.

1. Throttle screw adjustment is **only necessary** if specified elsewhere in this manual or if combustion tests indicate the need, as explained under **"Check Flame & Combustion with Instruments" on page 121**.
2. Boiler behavior that might indicate a need to check combustion values at high fire (as per **page 121**) to verify boiler is in adjustment include: difficulty igniting, poor flame stability at low fire, combustion noise or high carbon monoxide values.
3. Combustion readings must be taken at both high fire and low fire. DO NOT attempt an adjustment of the throttle screw at low fire.
   - See **Figure 100** for location of the throttle screw. Remove the cover screw to access the throttle adjustment screw.

CAUTION

Adjust the throttle adjustment screw in small movements.

Figure 100 EVG 220-399 Throttle screw (ONLY for use by a qualified technician using calibrated combustion test instruments)

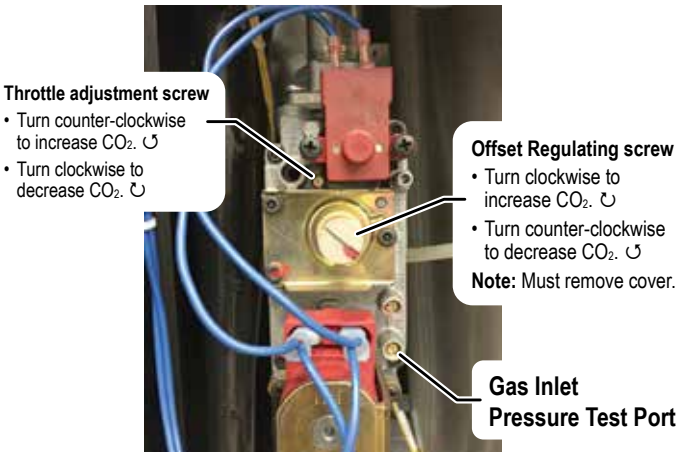

High Fire

Make sure the Max firing rate is set to the maximum and confirm the rpm valve during operation given in **Figure 104, page 134**. If not, adjust as necessary. Then navigate to DIAGNOSTICS - Manual test mode (**Figure 83, page 95)** and force the firing rate to HIGH (maximum output). After the boiler has had time to stabilize, take a CO_2 and CO readings.

a. If the CO_2 is HIGH, turn the throttle screw CLOCKWISE to lower the input. Allow the boiler to stabilize and take another reading. Continue until the desired CO_2 value is achieved.
b. If the CO_2 is LOW, turn the throttle screw COUNTERCLOCKWISE to increase the input. Allow the boiler to stabilize and take another reading. Continue until the desired CO_2 value is achieved.
c. Confirm that the CO is within limits.

Low Fire

1. Adjust the boiler to (LOW) (minimum output) and allow the boiler to stabilize. Confirm the rpm valve during operation with the data in **Figure 104, page 134**.
2. Remove the slotted cap, see **Figure 100**, for Offset screw adjustment.
   a. If the CO_2 is HIGH, turn the offset regulating screw COUNTERCLOCKWISE to lower the input. Allow the boiler to stabilize and take another reading. Continue until the desired CO_2 value is achieved.
   b. If the CO_2 is LOW, turn the regulating screw CLOCKWISE to increase the input. Allow the boiler to stabilize and take another reading. Continue until the desired CO_2 value is achieved.
   c. Confirm that the CO is within limits.

Re-check the Maximum and Minimum CO_2 and CO rate

1. Turn off the boiler and then turn it back on and put in Test Mode at maximum. Ensuring the CO_2 setting level has remained unchanged and confirm that CO is within limits.
2. Reduce to minimum and re-check the minimum rate output ensuring the CO_2 setting level has remained unchanged and confirm that CO is within limits.
3. In the event that the CO_2 and CO cannot be obtained, please contact your Weil-McLain representative.
4. Should you require any assistance during the set up procedure contact your Weil-McLain representative if the problem cannot be addressed with the information provided in this manual.

❑ Check ignition system safety shutoff device

1. After the boiler has been installed, turn off the boiler.
2. Shut off the manual gas valve located on the gas line to stop flow of fuel to the boiler.
3. Turn on the boiler. It will start the ignition sequence, but will not light. After some time, the boiler will lockout, the display screen will turn red, and the Control will display "Ignition Fault #". It means that the boiler tried to ignite without success for five (5) times and went into Lockout mode. This means that the ignition system safety device worked properly.
4. Clear the Lockout condition by selecting "Manual Reset" in the Diagnostic Menu.
5. Open the manual gas valve located on the gas line to resume fuel supply to the boiler.

Check-Out/Startup Verification

- ❑ **Check Heat exchanger and vent seals (EVG 110-399)**

1. Operate the boiler on HIGH fire.
2. Using an inspection mirror, move the mirror around all heat exchanger joints and vent pipe connections at the top of the boiler and at the connection to the condensate dish.
3. A leak would appear as vapor on the surface of the mirror.
4. If there is any indication of a leak at any joint, immediately shut down the boiler.
   a. If possible, tighten the retaining screws or nuts (without over-tightening).
   b. If this does not correct the problem, disassemble the components where the leak appeared. Use the procedures given in the **"Maintenance"** section.
   c. When disassembling components, inspect gaskets to see if there is damage. Replace any damaged gasket.
   d. Contact your Weil-McLain representative if the problem cannot be addressed with the information provided in this manual.
5. Condensate dish joint
   a. If the inspection mirror check shows a leak at the condensate dish-to-heat exchanger joint, contact your Weil-McLain representative for instructions to correct the problem.
   b. If the mirror test does not reveal a leak at the condensate dish joint, but there are signs of weepage or other indications that there might be leakage, the boiler must not be operated until a new sealing ring is obtained. Follow the instructions supplied with the sealing kit to disassemble boiler components as necessary to access and replace the seal

Adjust and Test Boiler Controls

1. Follow instructions in this manual to set and verify operation of the boiler controls.
2. Follow low water cutoff manufacturers instructions (if used).

Have the Following Been Done?

- ❑ Evergreen® Pro control set for the correct boiler model?
- ❑ Installation date and time entered into control?
- ❑ Boiler and heat distribution units filled with water?
- ❑ Water chemistry verified per **page 118**?
- ❑ Sentinel X100 corrosion inhibitor added and water tested to be within range?
- ❑ Automatic air vents, if used, opened one full turn?
- ❑ Air purged from system?
- ❑ Air purged from gas piping? Piping checked for leaks?
- ❑ Condensate trap installed per **page xx** and primed?
- ❑ **Propane Converted Boilers** - conversion to propane per **page xx** and propane conversion label affixed to jacket?

⚠ WARNING

Evergreen® Pro boilers are shipped ready to operate on natural gas ONLY. To operate on propane, you must follow the instructions in this manual to install the propane orifice. See **page 22** for EVG 110, **page 25** for EVG 155 or **page 25** for EVG 220-399. Failure to comply could result in severe personal injury, death or substantial property damage.

- ❑ Thermostat circuit wiring checked to ensure there are no stray voltages?
- ❑ Followed Operating Instructions, **Figure 96, page 123**?
- ❑ Burner flame and combustion verified per **page 121 page 122**?
- ❑ Control operation for space heating and DHW (if used) verified per this manual?
- ❑ Additional field-installed controls tested as outlined by control manufacturers? (Boiler should be operating and should go off when controls are tested. Verify controls cause automatic reset lockout or manual reset lockout as desired.)
- ❑ Additional field-installed limit control(s) set to system temperature requirements? Balancing valves and controls adjusted to provide design temperature to system?
- ❑ Flow adjusted/balanced for each zone of multiple zones systems?
- ❑ Thermostat heat anticipator (if available) set properly?
- ❑ Boiler cycled with thermostats (and with DHW aquastat, if installed) - Raised to highest setting and verified boiler goes through normal startup cycle? Lowered to lowest setting and verified boiler goes off?
- ❑ Natural gas input measured? (**page 122**)
- ❑ Incoming gas pressure checked by connecting manometer to gas valve ahead of boiler? (Gas pressure must be at least the minimum values given on **page 33**, with boiler operating at high fire, and no more than 14 inches (355 mm) w.c. with boiler operating or boiler off.)
- ❑ Heat exchanger and vent seals checked with mirror to ensure no leakage ?
- ❑ Observed several operating cycles for proper operation?
- ❑ Room thermostats set to desired room temperature (and DHW aquastat, if installed, to desired DHW storage temperature)?
- ❑ All instructions shipped with this boiler reviewed with owner or maintenance person?

Before Leaving:

- ❑ Fill in **Installation certificate**, **page 196**.
- ❑ Return instructions to envelope and give to owner or place inside boiler housing.

NOTICE

Fill out start-up data on the Installation and Service Certificate, **page 196**.

4

Annual Startup and General Maintenance

WARNING

Follow the service and maintenance procedures given throughout this manual and in component literature shipped with the boiler. Failure to perform the service and maintenance could result in damage to the boiler or system. Failure to follow the directions in this manual and component literature could result in severe personal injury, death or substantial property damage.

Figure 101 Service and maintenance schedules

Service Technician (see page numbers indicated for details)	
ANNUAL START-UP (See First-year special inspection)	• Handling Ceramic Fiber Materials . . . . . 129 • Removing Burner Gasket Or Cover Plate Insulation . . . . 129 • Niosh Stated First Aid . . . . . 129 • First-Year Special Inspection . . . . . 129 • Disconnect Power . . . . . 130 • Start-up and check/out . . . . . 130 • Address Reported Problems . . . . . 130 • Inspect Boiler Area . . . . . 130 • Inspect Boiler Interior & Door Gaskets . . . . . 130 • Tools Required. . . . . 130 • Reinstall boiler jacket door after startup or servicing. . . . 130 • Clean Condensate Trap (110/115 only). . . . . 131 • Clean Condensate Trap (220-399 only) . . . . . 131 • Clean Condensate Line . . . . . 131 • Check all Piping for Leaks . . . . . 131 • Check Air Openings. . . . . 132 • Flue Vent System and Air Piping . . . . . 132 • Check Water System. . . . . 132 • Check Expansion Tank(s) . . . . . 132 • Check Control Settings . . . . . 132 • Perform Startup and Checks . . . . . 132 • Check Low Water Cutoff . . . . . 132 • Check Low Water . . . . . 133 • Manual Test Mode for Single and Multiple Boilers. . . . . 133 • Check Burner Flame . . . . . 133 • Inspect Pressure Switch, Wiring and Tube (220-399 only) . 135 • Check Flame Signal . . . . . 135 • Check Blower Speeds . . . . . 135 • Check Flue Gas Temperature . . . . . 135 • Remove and Inspect Ignition Electrode Assembly and Wiring. 136 • Remove and Inspect Flame Sense Rod and Wiring (220-399 only) 136 • Remove, Inspect and Clean the Burner (110 Only). . . . . 136 • Remove, Inspect and Clean the Burner (155-399 only) . 138 • Inspect Combustion Chamber and Refractory . . . . . 139 • Replace all Components . . . . . 139 • Check all Boiler Wiring . . . . . 139 • Check Boiler Relief Valve . . . . . 139 • Reinstall Jacket Door After Servicing . . . . . 140 • Review with Owner 140

Owner Maintenance (see EVG User's Information Manual)	
Daily	• Check boiler area. • Check air openings. • Check pressure/temperature gauge. • Verify boiler jacket door is securely in place.
Monthly	• Check vent piping. • Check air piping. • Check relief valve. • Check condensate drain system. • Check automatic air vents (if used). • Verify that domestic hot water is being supplied to fixtures at the correct temperature (if Indirect Tank installed).
Every 6 months	• Check boiler piping (gas and water) • Operate relief valve.

Annual Startup

Handling Ceramic Fiber Materials

Removing Burner Gasket Or Cover Plate Insulation

WARNING

- The EVG cover plate refractory contain ceramic fiber materials that have been identified as carcinogenic, or possibly carcinogenic, to humans.
- Ceramic fibers can be converted to cristobalite in very high temperature applications.
- The International Agency for Research on Cancer (IARC) has concluded, "Crystalline silica inhaled in the form of quartz or cristobalite from occupational sources is carcinogenic to humans (Group 1).":

❑ Avoid breathing dust and contact with skin and eyes.

- Use NIOSH certified dust respirator (N95). This type of respirator is based on the OSHA requirements for cristobalite at the time this document was written. Other types of respirators may be needed depending on the job site conditions. Current NIOSH recommendations can be found on the NIOSH web site at http://www.cdc.gov/niosh/homepage.html. NIOSH approved respirators, manufacturers, and phone numbers are also listed on this web site.
- Wear long-sleeved, loose fitting clothing, gloves, and eye protection.

❑ Handle carefully to minimize dust that could be caused by abrasion.

❑ If replacement is necessary, remove the refractory from the boiler and place it in a plastic bag for disposal.

❑ Wash potentially contaminated clothes separately from other clothing. Rinse clothes washer thoroughly.

Niosh Stated First Aid

❑ Eye: Irrigate immediately

❑ Breathing: Fresh air.

First-Year Special Inspection

NOTICE

It is recommended that you obtain a Weil-McLain Boiler Maintenance kit before attempting the first-year inspection, to ensure all parts that may be needed are available. This kit includes a heat exchanger cover plate gasket, burner gasket, new ignitor, and ignitor gasket. Also includes flame sense rod and gasket for 220-399. See listing in **"Replacement Parts"** beginning on **page 168** . These parts must be on hand when you perform the first-year inspection in the event they must be replaced.

WARNING

Failure to replace the items above when needed could result in severe personal injury, death or substantial property damage.

1. **No later than 12 months** after the boiler is installed, perform a first-year inspection of the boiler. This should include the following **in addition to routine annual start-up procedures**.
   a. Inspect the heat exchanger and clean if necessary (see **page 142** (**EVG** 110), **page 145** (**EVG** 155) or **page 148** (**EVG** 220-399) for access and cleaning procedures).
   b. Inspect the cover plate refractory and gasket. Replace if not in good condition.
   c. Inspect the burner and inspect carefully. Clean the burner thoroughly using a vacuum cleaner and compressed air if needed.
   d. Make sure there is no blockage or accumulation of debris in the burner or the burner ports. Replace the burner if necessary.
   e. **EVG** 110: Check the burner for tightness. Remove the cover plate refractory and tighten the burner mounting screws if needed, following the instructions on **page 142**.
   f. **EVG** 155/220/299/300/399: Check burner access cover for tightness.
   g. Make sure to follow the inspection procedure given on **page 127**.
   h. Disconnect the condensate trap and drain lines. Inspect, then flush thoroughly. Reinstall and refill the trap per page 90.
2. Determine any follow-up maintenance and service needs based on the condition of the heat exchanger and condensate lines.
   a. If the heat exchanger shows substantial fouling, or if condensate lines show accumulation of sediment, schedule a follow-up service call to perform the first-year inspection again, sooner than the normal twelve months between.
   b. Heavy fouling of the exchanger or condensate lines indicates possible combustion air contamination. Inspect the air intake area carefully, and remove possible contaminants. See **page 35**, for products to avoid.

WARNING

You must eliminate causes of corrosion and contamination to ensure reliable operation of the boiler and system.

Annual Startup (continued)

⚠ WARNING

- The boiler should be inspected and started annually, at the beginning of the heating season, only by a qualified service technician. In addition, the maintenance and care of the boiler designated in **Figure 101, page 128** and explained on the following pages must be performed to assure maximum boiler efficiency and reliability. Failure to service and maintain the boiler and system could result in equipment failure.
- Electrical shock hazard - Turn off power to the boiler before any service operation on the boiler except as noted otherwise in this instruction manual. Failure to turn off electrical power could result in electrical shock, causing severe personal injury or death.

Disconnect Power

⚠ WARNING

ELECTRICAL SHOCK HAZARD - Disconnect all electrical power to the boiler before attempting maintenance procedures. Failure to complete could result in severe personal injury, death or substantial property damage.

Start-up and check/out

⚠ WARNING

Removing and reinstalling components can change boiler behavior. After any maintenance procedure, you must prove the boiler is operating correctly. To do so, follow the complete procedure for boiler and system start-up, beginning on **page 118**. Failure to comply could result in severe personal injury, death or substantial property damage.

Address Reported Problems

Inspect any problems reported by owner and correct before proceeding.

Inspect Boiler Area

1. Verify that boiler area is free of any combustible materials, gasoline and other flammable vapors and liquids.
2. Verify that air intake area is free of any of the contaminants listed on **page 35** of this manual. If any of these are present in the boiler intake air vicinity, they must be removed. If they cannot be removed, reinstall the air and vent lines per this manual.

Inspect Boiler Interior & Door Gaskets

1. Remove jacket front door and inspect interior of boiler.
2. Visually inspect the door gaskets. Make sure all are in good condition. Obtain replacements if any gasket is damaged.

⚠ WARNING

Door gaskets must be intact, and must provide a reliable seal. Replace any damaged gasket.

3. Remove the venturi air inlet silencer and clean if necessary. Reinstall silencer.
4. Vacuum any sediment from the inside of the boiler and components. Remove any obstructions.

⚠ WARNING

Do not use solvents to clean any of the boiler components. The components could be damaged, resulting in unreliable or unsafe operation.

Tools Required

Before beginning annual start-up or first-year special inspection, obtain the tools listed on **page 153**.

⚠ WARNING

Do not service the boiler without an Evergreen® Pro inspection kit available (220-399).

Reinstall Boiler Jacket Door after Startup or Servicing

⚠ WARNING

- Reinstall boiler jacket door after start-up or servicing. The boiler front door must be securely fastened to the boiler to prevent boiler from drawing air from inside the boiler room. This is particularly important if the boiler is located in the same room as other appliances.
- Inspect boiler jacket door gaskets. Gaskets must be in good condition, with no tears or gaps. Replace if necessary.
- Failure to keep the door securely sealed and fastened could result in severe personal injury or death.

Annual Startup (continued)

Clean Condensate Trap (110/115 only)

1. See **Figure 102**.
2. Remove floor stand front access panel to access the condensate trap, if floor standing.
3. Slide bracket off of condensate trap then disconnect top nut that secures the trap body to the boiler condensate connection (see **Figure 73, page 70**).
4. Remove the cleanout cap and remove the trap internal parts as shown.
5. Clean all trap components.
6. Re-assemble trap assembly. Re-install all lower gaskets.
7. Make sure the trap ball moves freely when re-inserted.
8. Fill trap with fresh water by pouring into the test port on the vent adapter (see **Figure 95, page 120**). Continue filling slowly until water begins flowing out the condensate drain line. Make sure the trap line is unobstructed and flows freely.
9. Reattach the trap to the boiler condensate outlet. Push the trap up until fully engaged. Then twist the upper nut clockwise to tighten. Check for secure connection. Place bracket under top nut and slide slot over rivet in cabinet, check for secure connection.

Figure 102 Condensate trap cleaning (110/155 only)

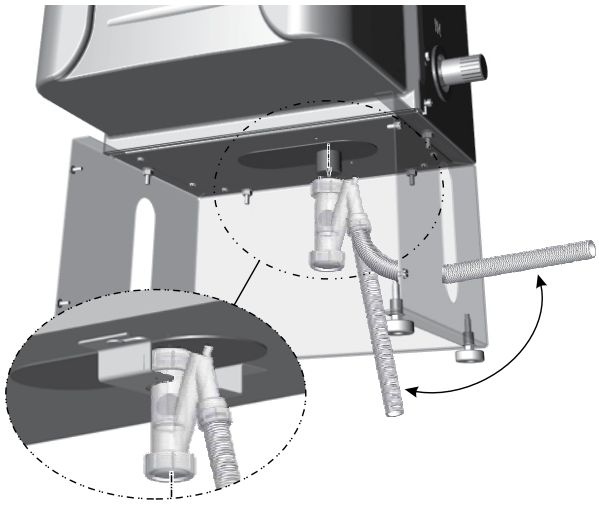

Clean Condensate Trap (220-399 only)

1. See **Figure 103**. Loosen condensate trap line hose clamps and remove trap line.
2. Empty water from trap line and inspect. Flush out if needed with fresh water.
3. Check condensate elbow, tee, and condensate line to drain. Flush if necessary to clean.
4. Fill trap with fresh water.
5. Reinstall condensate trap line and tighten hose clamps.

Figure 103 Condensate trap cleaning (220-399 only)

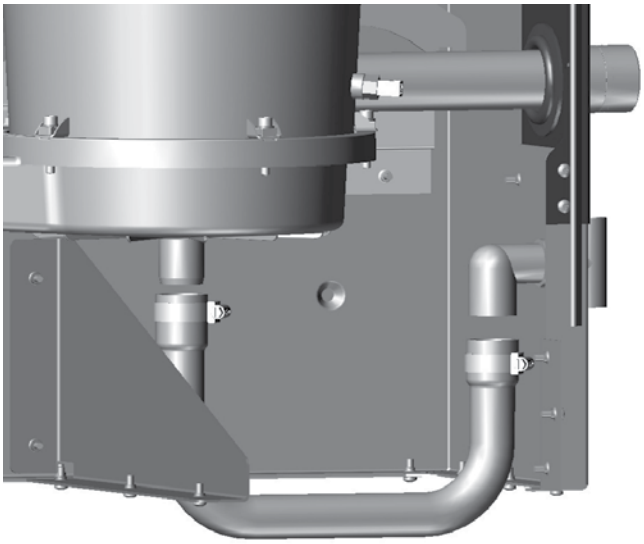

Clean Condensate Line

1. See **Figure 102**. Loosen condensate trap line hose clamps and remove trap line.
2. Empty water from trap line and inspect. Flush out if needed with fresh water.
3. Check condensate elbow, tee, and condensate line to drain. Flush if necessary to clean.
4. Fill trap with fresh water by pouring into the test port on the vent adapter (see **Figure 95, page 120**).
5. Reinstall condensate trap line and tighten hose clamps.

Check all Piping for Leaks

⚠ WARNING

Eliminate all system or boiler leaks. Continual fresh make-up water will reduce boiler life. Minerals can build up in the heat exchanger, reducing heat transfer, overheating heat exchanger, and causing heat exchanger failure. Leaking water may also cause severe property damage.

1. Inspect all water and gas piping and verify to be leak free.
2. Look for signs of leaking lines in the system and in the boiler and correct any problems found.
3. Check gas line using procedure on **page 34**.

Annual Startup (continued)

Check Air Openings

1. Verify that combustion and ventilation air openings to the boiler room and/or building are open and unobstructed.
2. Check operation and wiring of automatic combustion air dampers, if used.
3. Verify that boiler vent discharge and air intake are clean and free of obstructions.

Flue Vent System and Air Piping

1. Visually inspect entire flue gas venting system and combustion air piping for blockage, deterioration or leakage. Repair any joints that show signs of leakage in accordance with vent manufacturer's instructions. Verify that air inlet piping is connected and properly sealed.

⚠ WARNING

Failure to inspect for the above conditions and have them repaired can result in severe personal injury or death.

Check Water System

1. Verify all system components are correctly installed and operational.
2. Check the cold fill pressure for the system. Verify it is correct (usually around 12 PSIG).
3. Watch the system pressure as the boiler heats up (during testing) to ensure pressure doesn't rise too high. Excessive pressure rise indicates expansion tank sizing or performance problem.
4. Inspect automatic air vents and air separators. Remove air vent caps and briefly press push valve to flush vent. Reinstall caps. Make sure vents do not leak. Replace any leaking vents.
5. Check system water chemistry (pH, hardness and inhibitor level). See **page 118**.

Check Expansion Tank(s)

1. Expansion tanks provide space for water to move in and out as the heating system water expands due to temperature increase or contracts as the water cools.
2. See **page 59** or **page 60** depending on system type for information.
3. Tank types
   - Closed-type - welded gas tight and located above boiler. Tank is partially filled with water, leaving an air cushion for expansion.
     - Make sure a closed-type tank is fitted with a tank fitting, such as the B & G Tank-trol or Taco Taco-trol. This fitting reduces gravity circulation of air-saturated tank water back to the system and prevents the air from bubbling up through the water as it returns from the system.
     - Do not use automatic air vents in systems with closed-type tanks. The air will escape from the system instead of returning to the tank.
     - Eventually, the tank will waterlog and no longer control pressurization. The boiler relief valve will weep frequently.
   - Diaphragm- or bladder-type - welded gas tight with a rubber membrane to separate the tank pressurizing air and the water. May be located at any point in the system, but preferably located on the suction side of the system circulator.
     - Systems with this type of expansion tank require at least one automatic air vent, preferably located on top of an air eliminator, as shown in examples in this manual.
4. If relief valve has tended to weep frequently, the expansion tank my be water logged or undersized.
   a. **Diaphragm- or bladder-type expansion tank** - first, check tank size to be sure it is large enough for the system. If size is too small, add additional tank (or tanks) as necessary to provide sufficient expansion. If tank size is large enough, remove tank from system and check charge pressure (usually 12 PSIG for residential applications). If tank won't hold pressure, membrane has been damaged. Replace tank.
   b. **Closed-type expansion tank** - tank is most likely waterlogged. Install a tank fitting if not already installed. Then check fill level per fitting manufacturer's instructions. If fill level is correct, check tank size against manufacturer's instructions. Replace with a larger tank if necessary.

Check Control Settings

1. Use the control display to navigate through all settings. Adjust settings if necessary.
2. Check settings of external limit controls (if any) and adjust if necessary. Adjust as needed to accommodate the system design.

Perform Startup and Checks

1. Start boiler and perform checks and tests specified in this manual.
2. Verify cold fill pressure is correct and that operating pressure does not go too high. Adjust water pressure and expansion tank charge pressure as necessary.
3. Complete the check-out procedure on **page 127**.

Check Low Water Cutoff (Alternate LWCO - optional)

1. If the low water cutoff amber LED is on, the device requires service. Follow the low water cutoff manufacturer's instructions. (Sold separately).

Annual Startup (continued)

Check Low Water

1. If the control locks out on Low Water, check the boiler's water level before clearing the fault. Clean and inspect the sensor for damages or contaminates.

Manual Test Mode for Single and Multiple Boilers

Single Boiler

1. Navigate to Manual Test Mode screen under DIAGNOSTICS menu.
2. Generate a call for heat and wait until the burner is lit, if not yet in operation.
3. Press ENTER and select the desired FORCE RATE. Rate will be forced to setting for 10 minutes.

Multiple Boiler Running

1. Generate a call for heat on a Network Priority or a Local Priority
   a. Local Priority - allows Force Rate only on the boiler with the call for heat. Follow Single Boiler procedure, above.
   b. Network Priority - allows Force Rate on any boiler in the network. Follow procedure outline below in steps 2-5.
2. On the Master boiler, navigate to Manual Test Mode screen under DIAGNOSTICS menu. Select desired boiler to be tested.
3. The Manual Test Mode screen will automatically appear on the boiler you selected. On the selected boiler's control, press ENTER and select the desired FORCE RATE (HIGH, MED, OR LOW).

CAUTION

When forcing a rate on a Network Priority call, only boilers running Local Priority calls will remain on. All other boilers on the network will not fire until the Manual Test has ended. Ensure critical applications remain heated. Long periods of low heating can cause property damage.

4. The selected boiler will run at the forced rate until it is either returned to AUTO, the user selects "End Manual Test" on the Master's Manual Test Mode screen, or after 30 minutes of inactivity on the Master control.
5. To test the next boiler, return to the master and select the next desired boiler to test.

NOTICE

In the USA Input rates are derated 4% for each 1000 ft. above sea level, beyond 2000 ft. in accordance with National Fuel Gas Code, ANSI Z223.1/NFPA 54 – latest edition, and/or the Natural Gas and Propane Installation Code, CAN/CSA B149.1.

WARNING

For elevations above 10,000 feet, please contact Weil-McLain Technical Support for details.

NOTICE

In Canada, Input rates are derated 10% for altitudes of 2000 ft. to 4500 ft. above sea level. Please use appropriate Fan Speed Settings for High Altitude provided in this manual.

In Canada for elevation beyond 4500 feet. Please consult Provincial Authorities having jurisdiction and/or local codes

Check Burner Flame

WARNING

The boiler contains ceramic fiber materials. Use care when handling these materials per instructions on **page 129** of this manual. Failure to comply could result in severe personal injury.

1. Inspect flame through observation window using the procedure on **page 121**.
2. If flame is unsatisfactory at either high fire or low fire, check combustion values. If combustion is properly adjusted, turn off boiler and allow boiler to cool down. Then remove burner and clean it thoroughly using a vacuum cleaner or compressed air. Do not use compressed air to clean burner if performed inside a building.
3. To access the burner, follow the procedures beginning on **page 142** or **page 145**.
4. If replacing the burner, ensure the burner gasket is in good condition and correctly positioned. Follow all instructions on **page 145** to reinstall all components.
5. Restart the boiler.
6. Inspect the flame at high and low fire. If flame is still not acceptable, check combustion values. If combustion is properly adjusted, obtain a replacement burner from Weil-McLain. (see **Figure 105**)

Annual Startup (continued)

Figure 104 Firing rates and corresponding blower speeds (low fire, ignition, and high fire) - for altitudes up to 5,500 feet and high altitude (above 5,500 feet)

Altitude Setting	Fuel Type	110			155		
		%	RPM	BTU/hr	%	RPM	BTU/hr
Low Fire							
0ft	NG	20%	1,900	22,000	20%	1,225	28,000
	LP				20%	1,300	28,000
2,500-5,000ft	NG	20%	1,900	will vary	20%	1,225	will vary
	LP				20%	1,300	
5,500-11,000ft	NG	20%	2,890	will vary	20%	2,100	will vary
	LP				20%	2,100	
Ignition							
0-5,000ft	NG	50%	4,130	55,000	48%	2,800	72,850
	LP						
5,500-11,000ft	NG	54%	4,975	will vary	53%	3,500	will vary
	LP						
High Fire							
Maximum Setting	NG	100%	7,850	110,000	100%	5,500	155,000
	LP						

Altitude Setting	Fuel Type	220			299/300			399		
		%	RPM	BTU/hr	%	RPM	BTU/hr	%	RPM	BTU/hr
Low Fire										
0ft	NG	10%	1,225	22,000	10%	1,175	29,900	10%	1,210	39,900
	LP	10%	1,250	22,000	10%	1,145	29,900	10%	1,150	39,900
2,500-11,000ft	NG	10%	1,225 to 1,607	will vary	10%	1,235 to 1,601	will vary	10%	1,297 to 1,695	will vary
	LP	10%	1,315 to 1,632	will vary	10%	1,192 to 1,469	will vary	10%	1,247 to 1,645	will vary
Ignition										
0-5,000ft	NG	43%	3,000	94,550	38%	2,800	113,600	39%	3,150	156,300
	LP	43%	2,850	94,550	38%	2,640	113,600	39%	3,000	156,300
5,500-11,000ft	NG	will vary	3,830	will vary	will vary	3,540	will vary	will vary	4,030	will vary
	LP	will vary	3,620	will vary	will vary	3,330	will vary	will vary	3,840	will vary
High Fire										
Maximum Setting	NG	100%	6,260	220,000	100%	6,325	299,000	100%	7,200	399,000
	LP	100%	6,150	220,000	100%	6,020	299,000	100%	6,850	399,000

Note 1 - The boiler will automatically derate the Btu values listed in this table by 4% per 1,000 feet above sea level.
Low fire high altitude rpm's change starting at 2,500 feet. The rpm's will increase from the low value to the high value (11,000 feet) in a linear fashion.
Ignition high altitude rpm's change at 5,500 feet.

Annual Startup (continued)

Check Flame Signal

1. Navigate to Diagnostics/Inputs on the control display (see **Figure 105** for navigation instructions and **Table 10, page 115** for the complete Diagnostics menus).
2. The flame signal value (in micro amps) must be at least the boost value listed in **Figure 105**. If the flame signal drops below this level, the control will attempt to correct by increasing the blower speed to increase flame signal. At ignition, the proof of flame signal must be 0.8 or greater. Typical running flame signal should be between 4.5 and 6. This value will vary depending on blower modulation, gas type, combustion settings, altitude & age of components..
3. To access the burner, follow the procedures beginning on **page 142** (110), **page 145** (155) or **page 148** (220-399).
4. A low flame signal may indicate a fouled ignitor (110-155) or Flame Sense Rod (220-399) or damaged ignitor insulation.
   a. **110/155 Only:** See **"Remove and Inspect Ignition Electrode Assembly and Wiring" on page 136** to remove and inspect the ignitor.

      220-399 Only: See **"Remove and Inspect Flame Sense Rod and Wiring (220-399 only)" on page 136** to remove and inspect the flame sense rod.
   b. If required, clean the ignitor or Flame Sense Rod as instructed.
   c. If cleaning the ignitor or flame sense rod does not improve, ground wiring is in good condition, and ground continuity is satisfactory, replace the ignitor or flame sense rod.
5. If flame signal still remains low:
   a. Inspect the vent and air piping.
   b. Check combustion values.
   c. Then inspect the heat exchanger, following the procedures given in this manual for removal and reinstallation of the heat exchanger cover plate and other boiler components (see **page 145**).
   d. Clean the exchanger as described in this manual if necessary.

Check Blower Speeds

1. For all installations make sure the correct altitude is set in the boiler setup menu. The control automatically adjusts low fire, ignition and high fire rates to compensate for high altitude conditions.
2. Use the control display to navigate to DIAGNOSTICS/ Manual test mode (see **Figure 87, page 106** for navigation instructions and **Table 10, page 115** for the complete Diagnostics menus).
3. Set the firing rate to LOW (low fire).
4. Write down the blower RPM value, it should be within 50 of the value given in **Figure 104, page 134** for Natural gas or Propane Gas (LP), unless low fire speed was increased based on priority need.
5. Set the firing rate to IGNITION (ignition rate).

Figure 105 Flame signal shutdown values

	NG		LP	
Model	Boost	Shutdown	Boost	Shutdown
110	4.0	3.6	4.4	4.0
155	4.2	3.8	4.2	3.8
220	3.0	2.5	3.0	2.5
299/300	3.0	2.5	3.0	2.5
399	3.0	2.5	3.0	2.5

6. Write down the blower RPM value. It should be within 50 RPM of the value listed in **Figure 104, page 134** for Natural gas or Propane Gas (LP).
7. Set the firing rate to HIGH (high fire).
8. Write down the blower RPM value. It should be within 50 RPM of the value given in **Figure 104, page 134** for Natural gas or Propane Gas (LP).
9. If any of the values are outside the ranges listed in the previous steps, contact the factory for technical assistance.

NOTICE

Minimum and maximum blower speeds can be adjusted within limits, but changing speeds will affect AFUE ratings.

Check Flue Gas Temperature

1. Set the boiler to high fire. Then adjust the **EVG** control display to view flue gas temperature and boiler return temperature.
2. The flue gas temperature should be no more than 50°F higher than the boiler return temperature.
3. If the flue temperature is higher than this, shut down the boiler, allow to cool, and follow the procedure starting on **page 145** to clean the heat exchanger.

Inspect Pressure Switch, Wiring and Tube (220-399 only)

1. Inspect pressure switch, ensuring wire connects are properly connected and tube is secured to pressure port.
2. Inspect tube for any signs of damage or debris collected in tube, replace if necessary.
3. After checking Control Settings (see above), disconnect tube connection with condensate dish. Gently blow on tube until pressure switch opens and control displays lockout error. Clear lockout on control and confirm that lockout does not re-appear. Reconnect tube connection with condensate dish, making sure connection is secure.

Annual Startup (continued)

Remove the Burner Access Panel (220-399 only)

WARNING

DO NOT SERVICE THE BOILER WITHOUT AN Evergreen® PRO INSPECTION KIT AVAILABLE

Before each annual inspection, obtain an EVG Inspection Kit, which includes parts required for the procedures given in this manual. It is recommended to also obtain an EVG Maintenance Kit, which includes additional parts that may be required if inspection of components indicates the need for replacement. See Replacement parts for kit part numbers.

1. See **Figure 106**.
2. Remove the burner access panel (item 1) located on the top of the boiler jacket by removing the screws (item 3). Remove the air baffle (item 2) and screws (item 4) from the jacket top as shown.

Remove and Inspect Ignition Electrode Assembly and Wiring

1. See **Figure 108, page 138** (EVG 220 shown) for component references below.
2. For removal of the ignition rod please reference the following pages:
   For EVG 110, see page 161
   For EVG 155, see page 164
   For EVG 220-399, see page 167.
3. Discard the ignition electrode assembly gasket.
4. Inspect the ignition electrodes and ceramic insulators.
   a. Remove any white oxides accumulated on the ignition electrodes using steel wool.
   b. Clean the gasket surfaces on the ignition electrode assembly flange and on the mating surface of the heat exchanger cover plate.
   c. If the ignition electrode ceramic is cracked or damaged, or if the electrodes cannot be cleaned satisfactorily, replace the ignition electrode assembly with a new one.
5. Slide the new gasket onto the ignition electrode assembly.
6. Set the ignition electrode assembly with new gasket aside for later re-insertion.
7. Check ignition cable electrical resistance.
   a. A good cable will have resistance between 950 and 1050 ohms.
   b. Replace cable if not acceptable.
8. Verify all wiring is in good condition and securely attached.
9. Inspect boiler ground wire from heat exchanger access cover to ground terminal screw in control tray.
   a. Check resistance. It should be 0 ohms.
   b. Check ground continuity of wiring using continuity meter.
   c. Replace ground wires if results are not satisfactory.

Figure 106 Remove the burner access panel and screws (1 and 3) and air baffle and screws (2 and 4) from the jacket top as shown below

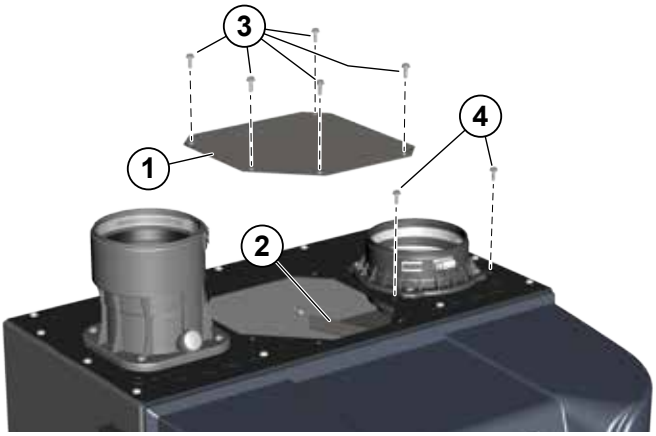

Remove and Inspect Flame Sense Rod and Wiring (220-399 only)

1. See **Figure 108, page 138** (EVG 220 shown) for component references below.
2. Disconnect the flame sense wire connected to the flame sense rod (item 8).
3. Use a 3 mm Allen wrench to remove the two screws securing the flame sense rod assembly to the heat exchanger cover plate. Carefully remove the flame sense rod.
4. Discard the flame sense rod gasket.
5. Inspect the flame sense rod and ceramic.
   a. Remove any white oxides accumulated on the flame sense rod.
   b. Clean the gasket surfaces on the flame sense assembly flange and on the mating surface of the heat exchanger cover plate.
   c. If the flame sense rod is bent or cannot be cleaned satisfactorily or if the ceramic is cracked or damaged, replace the flame sense rod assembly with a new one.
6. Slide the new gasket onto the flame sense rod assembly.
7. Inspect flame sense wire from flame sense connector to the connector at the control module in boiler control tray.
   a. Check resistance. It should be 0 ohms.
   b. Replace Wire Harness– Low Voltage if results are not satisfactory.

Annual Startup (continued)

LEGEND Figure 107 PARTS A and B

A. Boiler interior

B. Boiler interior, with components disconnected to allow removal of combustion chamber cover plate

C. Combustion chamber cover plate and components removed from boiler

D. Disassembling to access the burner

E. Heat exchanger interior

1. Inlet air silencer
2. Blower assembly
3. Gas valve
4. Venturi gas line clip
5. Venturi assembly
6. Heat exchanger cover plate
7. Ignitor assembly
8. Combustion chamber cover plate retainer nuts (4)
9. Burner
10. Putty knife
11. Refractory
12. Burner gasket
13. (3) Burner retainer screws
14. Control module

Remove and Inspect and Clean the Burner (110 Only)

1. See **Figure 107, page 137** .
   a. Slide the refractory (item 11) over the burner and off. Set the refractory aside where it will be kept clean and protected from damage. If the refractory is damaged, it must be discarded and replaced with a new one.
   b. Remove the four (4) #20 Torx screws (item 13) securing the burner (item 9) to the cover plate. Set aside.
   c. Remove the burner and its gasket (item 12).
   d. Inspect the interior of the burner. Brush and vacuum the interior if needed to remove lint or sediment. Alternative cleaning methods: • blow air from the inside out; • clean with a water spray from inside the burner; • swirl the burner thoroughly in a bucket of mild liquid laundry detergent water, then rinse thoroughly.
   e. Inspect the burner exterior. It must be in good condition, with no visible damage.
   f. Obtain a new burner gasket before re-installing the burner.

Figure 107 Accessing burner, ignition electrode, flame sense rod and inspection glass assembly (EVG 220 shown)

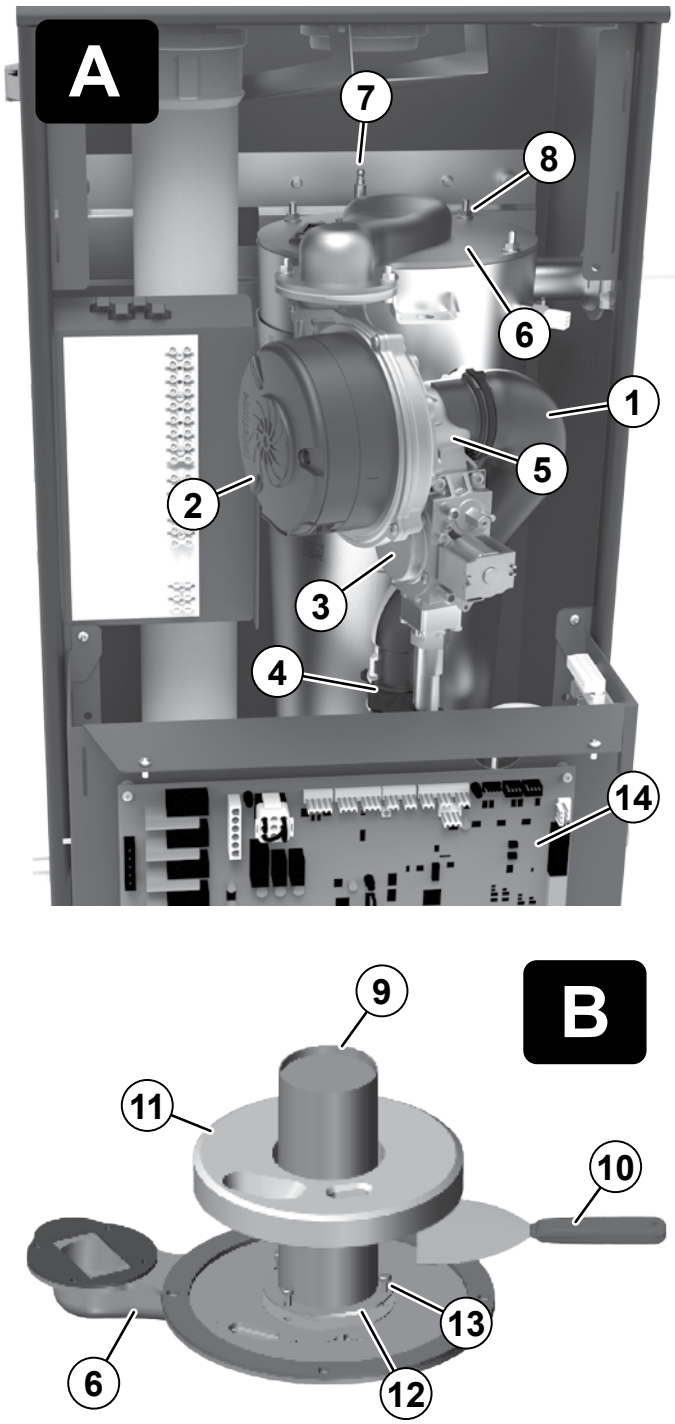

Annual Startup (continued)

LEGEND Figure 108 PARTS A and B

A. Boiler interior assembled view (Model EVG 220 shown; component locations vary with other models)
B. Boiler interior exploded view, showing heat exchanger cover plate (item 6) blower, burner assembly, burner access cover seal (item 13), ignitor, flame sense rod, and sight glass.
1. Inlet air silencer
2. Blower assembly
3. Gas valve
4. Burner access cover
5. Venturi assembly
6. Heat exchanger cover plate
7. Ignition electrode assembly
8. Flame sense rod
9. Heat exchanger cover plate retainer nuts (6) M6 hex
10. Burner cover retainer screws, M4 Phillips with captive washers
11. Burner
12. Burner gasket
13. Burner access cover seal
14. Burner gasket sealing surface
15. Burner sealing surface (lower surface of burner flange)

Remove and Inspect and Clean the Burner (155-399 only)

1. See Figure 108, page 138 (EVG 220 shown).
2. Use a Phillips stubby screwdriver to remove the four (4) M4 screws (item 10) that secure the burner access cover (item 4) to the heat exchanger cover plate (item 6).
3. Remove the burner access cover (item 4) and the burner (item 11).

WARNING

Use caution when removing the burner to pull it directly up and out. DO NOT angle the burner as you remove it. Angling the burner could cause it to strike the refractory, damaging the refractory and causing fragments to fall into the heat exchanger. Should this happen, a heat exchanger refractory replacement kit must be installed and the heat exchanger must be thoroughly cleaned following the procedures given in this manual and the refractory replacement instructions.

4. Remove and discard the burner gasket (item 12). This gasket is graphite and may pull apart or stick to the burner on removal. Use a soft brush if necessary to remove residue. DO NOT allow debris to drop into the heat exchanger. A new gasket must be installed later when the burner is re-inserted.
5. Inspect the burner access cover seal (item 13). Discard and use a new seal during re-assembly if the seal is damaged in any way.
6. Inspect the interior of the burner. Brush and vacuum the interior if needed to remove lint or sediment. Alternative cleaning methods:
   a. Blow air or nitrogen from the inside out.
   b. Clean with a water spray from inside the burner.
7. Inspect the burner exterior. It must be in good condition, with no visible damage.
8. Clean the under side of the burner flange (see item 15) with a soft brush to remove any gasket fragments remaining.
9. Set the burner aside for re-insertion later.

Figure 108 Accessing burner, ignition electrode, flame sense rod and inspection glass assembly (EVG 220 shown)

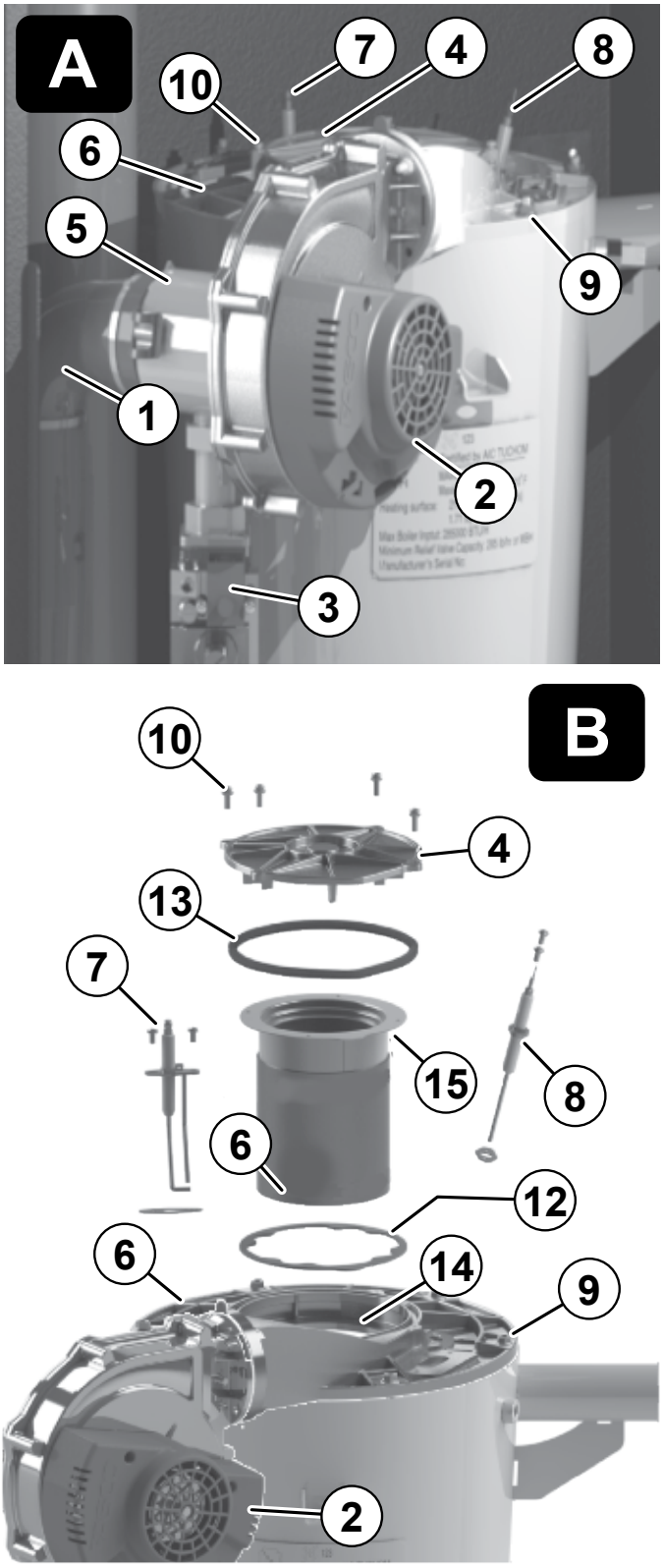

Annual Startup (continued)

Inspect Combustion Chamber and Refractory

1. Look into the burner opening in the heat exchanger cover plate.
2. Use a trouble light and inspection mirror to inspect the heat exchanger interior.
   a. Make sure that there is no debris inside the heat exchanger.
   b. Use the inspection mirror to check the condition of the burner refractory that is adhered to the bottom of the heat exchanger cover plate. It must be in good condition with no indication of damage or sagging. Make sure there are no signs of overheating or of flue gas leakage.

WARNING

If visual inspection of the heat exchanger indicates the need, follow the procedures in **"Cleaning Heat Exchanger Flue Side, 110" on page 142** to remove the heat exchanger cover plate and fully inspect and clean the interior. Obtain replacement parts for any components that may be damaged or that show signs of leakage.

Replace all Components

1. Reinstall the burner.
   a. Insert a new burner gasket (item 12) into the heat exchanger cover plate (item 4).
   b. Insert the burner into position.
   c. Insert the burner access cover seal into the heat exchanger cover plate.
   d. Place the burner access cover (item 4) into position and secure the four screws (item 10).
2. Reinstall ignition electrode assembly and gasket, making sure that it is correctly positioned. Tighten the two (2) screws securely.
   a. Re-attach igniter cable and ground wire to the ignition electrode assembly.
3. Reinstall flame sense rod assembly (220-399 only) and gasket, making sure that it is correctly positioned. Tighten the two (2) screws securely.
   a. Re-attach the wire to the flame sense rod.
4. Reinstall the burner access panel (220-399 only) and air baffle (see **Figure 106, page 136**). Tighten screws securely.

Check all Boiler Wiring

1. Inspect all boiler wiring, making sure wires are in good condition and securely attached.
2. Verify that all connectors are securely inserted.
3. Verify ground wires are connected to jacket right side and control tray cover.

Check Boiler Relief Valve

4. Inspect the relief valve and lift the lever to verify flow as in the following warnings, excerpted from a relief valve manufacturer's warning label. Before operating any relief valve, ensure that it is piped with its discharge in a safe area to avoid severe scald potential.
5. Read **page 61** or **page 68** before proceeding further.
6. Follow instructions below or perform procedures per relief valve manufacturer's printed instructions.

WARNING

- Safety relief valves should be reinspected AT LEAST ONCE EVERY THREE YEARS, by a licensed plumbing contractor or authorized inspection agency, to ensure that the product has not been affected by corrosive water conditions and to ensure that the valve and discharge line have not been altered or tampered with illegally. Certain naturally occurring conditions may corrode the valve or its components over time, rendering the valve inoperative. Such conditions are not detectable unless the valve and its components are physically removed and inspected. This inspection must only be conducted by a plumbing contractor or authorized inspection agency - not by the owner. Failure to reinspect the boiler relief valve as directed could result in unsafe pressure buildup, which can result in severe personal injury, death or substantial property damage.
- Following installation, the valve lever must be operated AT LEAST ONCE A YEAR to ensure that waterways are clear. Certain naturally occurring mineral deposits may adhere to the valve, rendering it inoperative. When manually operating the lever, water will discharge and precautions must be taken to avoid contact with hot water and to avoid water damage. Before operating lever, check to see that a discharge line is connected to this valve directing the flow of hot water from the valve to a proper place of disposal. Otherwise severe personal injury or property damage may result. If no water flows, valve is inoperative. Shut down boiler until a new relief valve has been installed.

7. After following the above warning directions, if the relief valve weeps or will not seat properly, replace the relief valve. Ensure that the reason for relief valve weeping is the valve and not over-pressurization of the system due to expansion tank waterlogging or under-sizing.

Annual Startup (continued)

Reinstall Jacket Door After Servicing

WARNING

- Reinstall boiler jacket door after start-up or servicing. The boiler jacket door must be securely fastened to the boiler to prevent boiler from drawing air from inside the boiler room. This is particularly important if the boiler is located in the same room as other appliances.
- Inspect boiler jacket door gaskets on front of cabinet. Gaskets must be in good condition, with no tears or gaps. Replace if necessary.
- Failure to keep the jacket door securely sealed and fastened could result in severe personal injury or death.

Review with Owner

1. Review the User's Information Manual with the owner.
2. Emphasize the need to perform the maintenance schedule specified in the User's Information Manual (and in this manual as well).
3. Remind the owner of the need to call a licensed contractor should the boiler or system exhibit any unusual behavior.
4. Remind the owner to follow the proper shutdown procedure and to schedule an annual startup at the beginning of the next heating season.

Section 5 Maintenance

Maintenance

WARNING

DO NOT SERVICE THE BOILER WITHOUT A Evergreen® PRO MAINTENANCE KIT AVAILABLE

The maintenance kit includes components that may have to be replaced when accessing or disassembling parts of the boiler.

Failure to replace damaged components and to use only the parts specifically intended for the boiler can result in severe personal injury, death or substantial property damage.

See **Figure 125, page 167** for part number.

Disconnect Power

WARNING

Electrical shock hazard - Disconnect all electrical power to the boiler before attempting maintenance procedures. Failure to complete could result in severe personal injury, death or substantial property damage.

Re-install Boiler Jacket Door after Startup or Servicing

WARNING

- Reinstall boiler jacket door after start-up or servicing. The boiler jacket door must be securely fastened to the boiler to prevent boiler from drawing air from inside the boiler room. This is particularly important if the boiler is located in the same room as other appliances.
- Inspect boiler jacket door gaskets on front of cabinet. Gaskets must be in good condition, with no tears or gaps. Replace if necessary.
- Failure to keep the jacket door securely sealed and fastened could result in severe personal injury or death.

Start-up and Check/out

WARNING

Removing and reinstalling components can change boiler behavior. After any maintenance procedure, you must prove the boiler is operating correctly. To do so, follow the complete procedure for boiler and system start-up, beginning on **page 118**. Failure to comply could result in severe personal injury, death or substantial property damage.

Oiled Bearing Circulators

1. Check circulators in the system. Oil any circulators requiring oil, following circulator manufacturer's instructions. Over-oiling will damage the circulator.

Cleaning the Heat Exchanger Water Side, when Required

1. Isolate the boiler from the heating system.
2. Obtain Sentinel X400 cleaner from Weil-McLain. Follow instructions supplied with the cleaner to clean the boiler heat exchanger.

WARNING

- Use ONLY the cleaning product available from Weil-McLain, Sentinel X400. See **"Accessory Parts"** for ordering information.
- Using other cleaning materials or methods could cause permanent damage to the boiler heat exchanger.
- Inspect the heating system water. If there is evidence of sediment or corrosion, the boiler must be isolated from the system. The system must then be thoroughly cleaned to remove all sediment.
- Isolated the cause of the system corrosion and correct the problem(s) before placing the boiler back in service.
- Failure to comply could result in severe personal injury, death or substantial property damage.

Cleaning Heat Exchanger Flue Side, 110

Cleaning the EVG 110 Heat Exchanger Flue Side or Accessing the Burner, if Required

WARNING

The boiler contains ceramic fiber materials. Use care when handling these materials per instructions on **page 129** of this manual. Failure to comply could result in severe personal injury.

Tools Required

- Long-handled Torx driver, #20
- T25 Torx Bit
- 3mm Allen wrench
- Phillips head screwdriver, #2
- Nut driver, 5/16"
- Torque wrench
- Putty knife
- Wrench or socket, 10mm
- (2) Large Crescent wrenches

Before Proceeding:

1. Shut down the boiler:
   a. Follow “To Turn Off Gas to Appliance” instructions on boiler and Operating instructions.
   b. Close the boiler manual gas valve.
2. Allow time for the boiler to cool to room temperature if it has been firing.
3. Remove jacket door by removing top retaining screw and undoing the two (2) latches on each side. Rotate and lift the jacket door away from the boiler to remove.

Remove Components to Allow Access

1. See **Figure 110, page 143** part A to locate components referenced in the following.
2. Disconnect the communication board terminal strip and 4-pin connector from communication board and lift up and remove display bracket.
3. Remove the air baffle (item 31, **page 9**) by removing the two (2) hex head screws in front of the air intake adapter (item 19, **page 9**). Set aside.
4. See **Figure 110, page 143** part B.
   a. Release the air silencer bracket free from gas line.
   b. Remove the air silencer from the venturi by sliding it away from the blower/venturi assembly. Set the air silencer aside.
   c. Remove the two (2) electrical connectors from the blower and one connector from the gas valve.
   d. By using two wrenches, loosen the union fitting between the flexible gas line and the gas valve flare adapter. Gently set the flex line aside, where it is out of the way and free from damage.
   e. Remove the blower/venturi/gas valve assembly by removing the two (2) nuts connecting the blower to the cover plate.
   f. Remove the four (4) 10mm hex nuts (item 8) that secure the heat exchanger cover plate (item 6).
   g. Disconnect the ground wire and ignition cable from the igniter (item 7).

CAUTION

Label all wires prior to disconnection when servicing controls. Wiring errors can cause improper and dangerous operation.

   h. Lift the cover plate/burner assembly vertically until the refractory (part C, item 11) clears the heat exchanger.
   i. Tilt the cover plate/burner assembly slightly forward. Then pull the assembly forward and out of the jacket.
   j. Remove the igniter by removing the two (2) Socket head Allen igniter bolts. Set the igniter, its gasket and screws aside. Be careful when handling the igniter not to damage the igniter ceramic.
   k. Inspect the igniter ceramic and electrodes. Clean the electrodes carefully with steel wool. If the igniter ceramic is cracked or damaged, replace the igniter with a new one.

WARNING

Handle the cover plate/burner assembly carefully to avoid damage to the igniter or refractory. Place the assembly on a clean, flat surface with the assembly upside down, as shown in **Figure 110, page 143** part C and part D.

5. See **Figure 110, page 143** part C.
   a. Use a wide-blade putty knife (item 10) to gently pry the refractory from the heat exchanger cover plate. The refractory is attached with silicone adhesive and should separate with a little pressure on the putty knife.

WARNING

DO NOT gouge or crack the refractory. The refractory is made of ceramic fiber materials. Read the ceramic fiber WARNING on **page 129** before handling or disposing of ceramic fiber materials.

Figure 109 Legend for **Figure 110, page 143**

A. Boiler interior, with components disconnected to allow removal of combustion chamber cover plate
B. Combustion chamber cover plate and components removed from boiler
C. Disassembling to access the burner
D. Heat exchanger interior
1. Inlet air silencer
2. Blower assembly
3. Gas valve
4. Venturi gas line clip
5. Venturi assembly
6. Heat exchanger cover plate
7. Ignitor assembly
8. Combustion chamber cover plate retainer nuts (4)
9. Burner
10. Putty knife
11. Refractory
12. Burner gasket
13. (3) Burner retainer screws
14. Control module

Cleaning Heat Exchanger Flue Side, 110 (continued)

Figure 110 Accessing the burner or heat exchanger (see Legend on **page 142**)

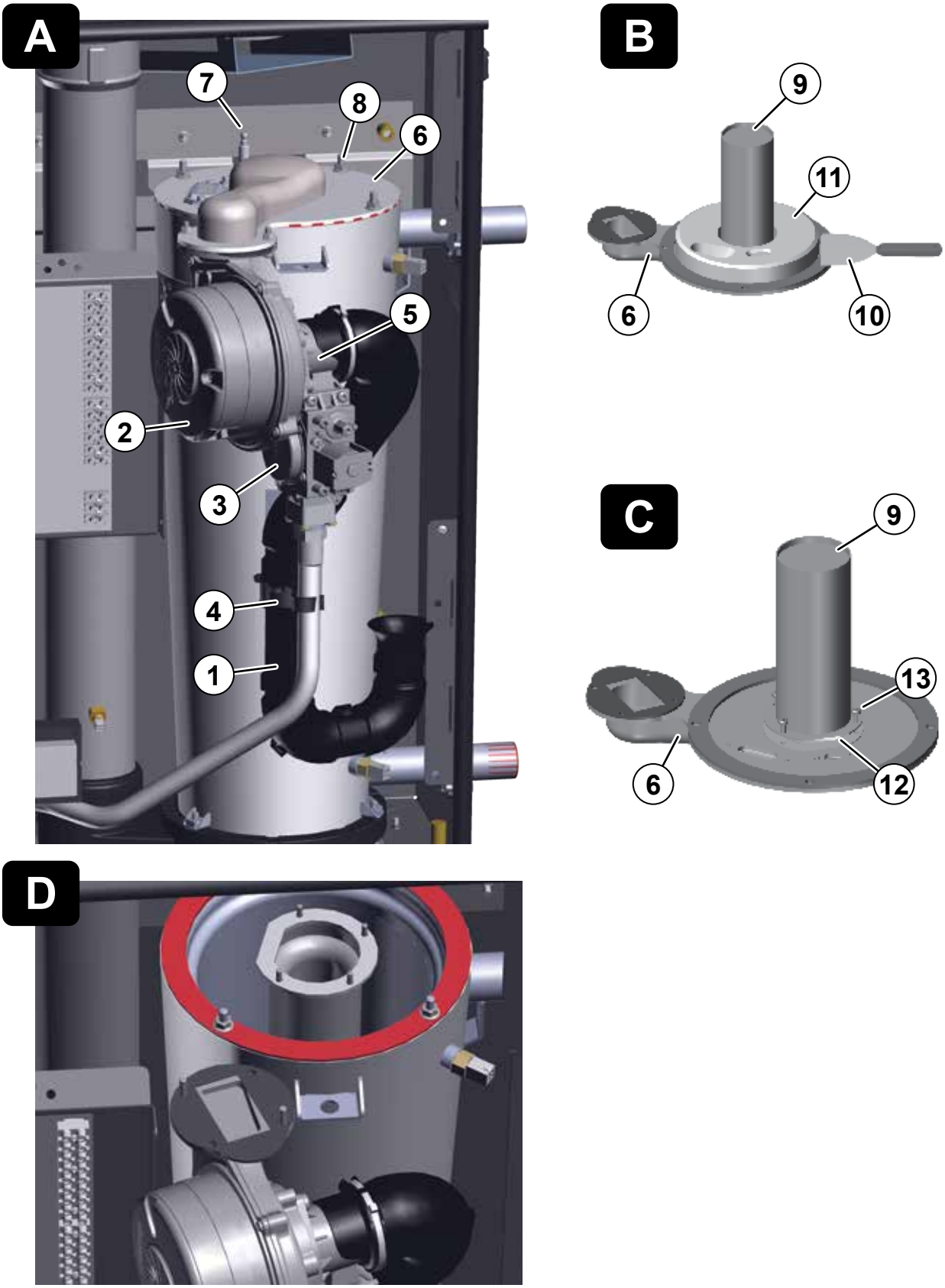

Cleaning Heat Exchanger Flue Side, 110 (continued)

Inspect and Clean the Burner

1. See **Figure 110, page 143** part D.
   a. Slide the refractory (item 11) over the burner and off. Set the refractory aside where it will be kept clean and protected from damage. If the refractory is damaged, it must be discarded and replaced with a new one.
   b. Remove the four (4) #20 Torx screws (item 13) securing the burner (item 9) to the cover plate. Set aside.
   c. Remove the burner and its gasket (item 12).
   d. Inspect the interior of the burner. Brush and vacuum the interior if needed to remove lint or sediment. Alternative cleaning methods: • blow air from the inside out; • clean with a water spray from inside the burner; • swirl the burner thoroughly in a bucket of mild liquid laundry detergent water, then rinse thoroughly.
   e. Inspect the burner exterior. It must be in good condition, with no visible damage.
   f. Obtain a new burner gasket before re-installing the burner.

Inspect and Clean the Heat Exchanger

1. Access the heat exchanger interior by following the previous instructions.
2. See **Figure 110, page 143** part E.
3. Before using water to clean the heat exchanger, remove the control module (item 14). Label wires if they are not labeled. Set aside. Remove all connectors and wire harnesses from the control module and then remove the two (2) screws securing it to the bracket.
4. Use a strong light to visually inspect the interior of the heat exchanger. Make sure the flueways (tubes) are clear and unobstructed.
5. Use a vacuum cleaner to remove any accumulation on the heating surfaces. This includes removing any pieces of refractory that may have dropped into the exchanger.

WARNING

DO NOT use any solvent when cleaning the exchanger.

6. If the vacuum cleaner is unable to clean completely, wash the heating surfaces with clean, warm water.
   a. Place a bucket under the boiler condensate drain connection.
   b. Loosen and move the condensate bracket, then loosen the condensate trap upper nut and slide the trap off of the drain connection. (See **Figure 73, page 70** for reference.)
   c. Spray fresh water into the heat exchanger and tubes to remove sediment. Collect water in the bucket below.
7. Inspect the heat exchanger cover plate refractory. Replace if insulation is damaged.

Reinstall components

1. See **Figure 110, page 143** for reference.
2. Reinstall the control module (item 14) to the control bracket and reconnect all connectors and wire harnesses.
3. Reinstall the burner (item 9) and burner gasket (item 12) on the cover plate (item 6). Tighten the burner screws (item 13) using a torque wrench. The screws must be secure, but the torque must not exceed 20 inch-pounds.
4. Apply a ring of silicone adhesive on the cover plate (to secure the refractory).
5. Slide the refractory (item 11) over the burner. Align the refractory and press in place.
6. **Before** handling the assembly, allow the adhesive to set enough that the refractory is firmly held in place.
7. Reinstall the igniter assembly (item 7).
   a. The igniter gasket must be intact and in good condition. Replace with a new gasket if necessary.
   b. Insert the igniter into the cover plate opening, with the gasket in position.
   c. Reinstall the two (2) Socket head Allen bolts finger tight.
   d. Use a torque wrench to tighten the igniter screws. DO NOT exceed 20 inch-pounds torque.
8. Reinstall the cover plate assembly (items 5 and 6) and secure the cover plate with 10mm hex nuts (item 8).

WARNING

You must gradually tighten the cover plate nuts using a torque wrench. The final torque MUST NOT exceed 45 inch-pounds. Alternate tightening until all nuts reach 45 inch-pounds.

9. Reconnect the ignition cable and the igniter ground wire.
10. Reinstall the blower, venturi, gas valve assembly.
    a. Inspect the blower to cover plate gasket, replace if gasket is damaged or has taken a set.
    b. Slide the blower assembly up to the cover plate, passing the two (2) blower studs up through the cover plate holes. Use the two locking nuts to secure the assembly, torx locking nuts to 20 inch-pounds.
    c. Reinstall the flexible gas line by using two wrenches to tighten the union fitting between the gas line and the gas valve flare adapter.
11. Reinstall the air silencer (item 1).
12. Reinstall the two (2) electrical connectors from the blower and one connector from the gas valve.
13. Reinstall the condensate trap and bracket on the boiler condensate drain connection, if removed. (See **Figure 73, page 70** for reference.)

WARNING

Perform a complete start-up procedure when putting the boiler back into service. See **page 118** and all instructions for start-up and verification. Include a soap suds leak test on all interior and exterior gas piping after starting the boiler.

Cleaning Heat Exchanger Flue Side, 155

Cleaning the EVG 155 Heat Exchanger Flue Side or Accessing the Burner, when Required

WARNING

The boiler contains ceramic fiber materials. Use care when handling these materials per instructions on page 129 of this manual. Failure to comply could result in severe personal injury.

Tools Required

- Metric wrench or socket, 10mm
- Phillips head screwdriver, #2
- Socket with 8" extension, 5/16"
- Torque wrench
- Putty knife
- 3mm Allen wrench
- (2) Large Crescent wrenches

Before Proceeding:

1. Shut down the boiler:
   a. Follow “To Turn Off Gas to Appliance” instructions on boiler and Operating instructions.
   b. Close the boiler manual gas valve.
2. Allow time for the boiler to cool to room temperature if it has been firing.
3. Remove jacket door by removing top retaining screw and undoing the two (2) latches on each side.
4. Rotate and lift the jacket door away from the boiler to remove.

Remove and Inspect the Igniter Assembly

1. See **Figure 112, page 147** part A.
2. Disconnect the ground wire and ignition cable from the igniter (item 7).

CAUTION

Label all wires prior to disconnection when servicing controls. Wiring errors can cause improper and dangerous operation.

3. Remove the two (2) Socket head Allen bolts securing the igniter to the heat exchanger cover plate (item 6).
4. Carefully slide the igniter out of its mounting slot.
5. Remove and inspect the igniter gasket. Replace with a new gasket if necessary.
6. Inspect the igniter ceramic and electrodes. Clean the electrodes carefully with steel wool. If the igniter ceramic is cracked or damaged, replace the igniter with a new one.

Remove Components to Allow Access

1. See **Figure 112, page 147** part A to locate components referenced in the following.
2. Disconnect the communication board terminal strip and 4-pin connector from communication board and lift up and remove display bracket.
3. Remove the air silencer and disconnect gas line:
   a. See **Figure 112, page 147** part A.
   b. Locate the air silencer clip, item 8. Pull on the right side of the clip until it rotates forward as shown in part A inset.
   c. Slide the air silencer (item 1) down and off of the venturi (item 5). Set the air silencer aside.
   d. Disconnect the flexible gas line where it connects just below the gas valve (item 3). Lay the free end of the flexible gas line to the side.

WARNING

Use two wrenches when disconnecting the flexible gas line to prevent damage to the gas valve and other gas line components.

   e. Disconnect the two wire harnesses connected to the blower and the wire harness connected to the gas valve.
4. It is RECOMMENDED to remove the blower/gas valve venturi assembly (item 2) from the cover plate (item 6) by removing the two 5/16" locknuts attaching them. This will make removing the cover plate significantly easier.
5. Remove the heat exchanger cover plate assembly:
   a. See **Figure 112, page 147** part A, part C and part D.
   b. Use a 10mm wrench to remove the five (5) M6 nuts (item 9) that secure the heat exchanger cover plate (item 6) to the heat exchanger.
   c. Lift the cover plate assembly vertically until the refractory (part D, item 16) clears the heat exchanger.
   d. Slide the cover plate forward as you tilt the front downward until the rear lip clears the cabinet. Avoid gouging the refractory on the heat exchanger studs.

WARNING

DO NOT gouge or crack the refractory. The refractory is made of ceramic fiber materials. Read the ceramic fiber WARNING on page 129 before handling or disposing of ceramic fiber materials.

   e. Carefully place the cover plate assembly aside.

WARNING

Handle the cover plate assembly carefully to avoid damage to the components or refractory. Place the assembly on a clean, flat surface.

Inspect and clean the burner

1. See **Figure 112, page 147** part C and part D.
2. Use a Phillips screwdriver to remove the three (3) M4 screws and flat washers (item 10) that secure the burner access cover (item 4) to the heat exchanger cover plate (item 6).
3. Remove the burner cover plate (item 4) and the burner (item 11).
4. Remove the burner gasket (item 12) from the heat exchanger cover plate if still in place. This gasket is graphite and may pull apart or stick to the burner on removal. Replace the gasket with a new one during reassembly.
5. Inspect the burner access cover seal (item 13). Discard and use a new seal during re-assembly if the seal is damaged in any way.
6. Inspect the interior of the burner. Brush and vacuum the interior if needed to remove lint or sediment. Alternative cleaning methods: • blow air from the inside out; • clean with a water spray from inside the burner; • swirl the burner thoroughly in a bucket of mild liquid laundry detergent water, then rinse thoroughly.
7. Inspect the burner exterior. It must be in good condition, with no visible damage.
8. Clean the underside of the burner flange (see item 14) with a soft brush to remove any gasket fragments remaining.

Cleaning Heat Exchanger Flue Side, 155 (continued)

Inspect Refractory and Replace Burner Gasket

1. See **Figure 112, page 147** part B.
   a. Inspect the refractory (item 15) to make sure it is intact, with no visible damage.
   b. If the refractory must be replaced, use a wide-blade putty knife to gently pry the refractory from the heat exchanger cover plate. The refractory is attached with silicone adhesive and should separate with a little pressure on the putty knife.

WARNING

DO NOT gouge or crack the refractory. The refractory is made of ceramic fiber materials. Read the ceramic fiber WARNING on **page 129** before handling or disposing of ceramic fiber materials.

   c. When replacing the refractory, apply a ring of silicone adhesive on the cover plate. Place the refractory onto the cover plate. Before handling the assembly, allow the adhesive to set enough that the refractory is firmly held in place.
2. Clean the burner gasket surface inside the heat exchanger cover plate (item 6) with a soft brush to remove any gasket residue.
3. The burner gasket must be replaced with a new one when the boiler is re-assembled after servicing.

Inspect and Clean the Heat Exchanger

1. Access the heat exchanger interior by following the previous instructions. Remove and inspect the heat exchanger cover plate gasket. Replace if necessary.
2. See **Figure 112, page 147** part E.
3. Before using water to clean the heat exchanger, remove the control module (item 17). Label wires if they are not labeled. Set aside. Remove all connectors and wire harnesses from the control module and then remove the two screws securing it to the bracket.
4. Use a strong light to visually inspect the interior of the heat exchanger. Make sure the flue ways (tubes) are clear and unobstructed.
5. Use a vacuum cleaner to remove any accumulation on the heating surfaces. This includes removing any pieces of refractory that may have dropped into the exchanger.

WARNING

DO NOT use any solvent when cleaning the exchanger.

6. If the vacuum cleaner is unable to clean completely, wash the heating surfaces with clean, warm water.
   a. Place a bucket under the boiler condensate drain connection.
   b. Loosen and move the condensate bracket, then loosen the condensate trap upper nut and slide the trap off of the drain connection. (See **Figure 73, page 70** for reference.)
   c. Spray fresh water into the heat exchanger and tubes to remove sediment. Collect water in the bucket below.
7. Inspect the heat exchanger cover plate gasket (item 18). Replace if is damaged in any way.

Reinstall Components

1. See **Figure 112, page 147** for reference.
2. Reinstall the control module (item 20) to the control bracket and reconnect all connectors and wire harnesses.
3. Reinstall the burner (item 11), burner gasket (item 12) and burner access cover seal (item 13) on the heat exchanger cover plate (item 6).
   a. Insert and tighten the burner cover plate screws and washers (item 10) using a Phillips screwdriver. The screws must be secure, with torque no more than 20 inch-pounds.
4. Reinstall the heat exchanger cover plate assembly on the heat exchanger.
   a. Seat the heat exchanger cover plate gasket on the heat exchanger sealing surface.
   b. Tilt heat exchanger cover plate front lip downward until back lip clears cabinet and burner can slide inside combustion chamber. Slide cover plate back and rotate until seated flat on the heat exchanger sealing surface. Avoid gouging the refractory on the heat exchanger studs.
   c. Secure the heat exchanger cover plate (item 6) to the heat exchanger with the five (5) M6 nuts using a 10mm wrench.

WARNING

You must gradually tighten the cover plate nuts using a torque wrench. The final torque MUST NOT exceed 45 inch-pounds. Alternate tightening until all nuts reach 45 inch-pounds.

5. Reinstall the blower/gas valve/venturi assembly (items 2, 3, and 5).
   a. Place blower flange on to studs protruding from cover plate.
   b. Reinstall the two (2) 5/16" locknuts using a socket with extension.
   c. Do not over tighten (torque no more than 20 inch-pounds).
6. Reinstall the igniter assembly (item 7).
   a. The igniter gasket must be intact and in good condition. Replace with a new gasket if necessary.
   b. Insert the igniter into the cover plate opening, with the gasket in position.
   c. Reinstall the two (2) Socket head Allen bolts finger tight.
   d. Use a torque wrench to tighten the igniter screws. DO NOT exceed 25 inch-pounds torque.
   e. Reconnect the ignition cable and the igniter ground wire.
7. Reconnect the flexible gas line to the gas valve using two wrenches.
8. Reinstall the air inlet silencer (item 1) by pressing up onto the venturi (item 5). Rotate the air silencer clip (item 8) and snap it onto the gas line.
9. Reconnect the two (2) wire harnesses to the blower and gas valve.
10. Reinstall the condensate trap and bracket on the boiler condensate drain connection. (See **Figure 73, page 70** for reference.)

WARNING

Perform a complete start-up procedure when putting the boiler back into service. See **page 118** and all instructions for start-up and verification. Include a soap suds leak test on all interior and exterior gas piping after starting the boiler.

Figure 111 Legend for **Figure 112, page 147**

A. Boiler interior
B. Assembled heat exchanger cover plate (item 6), burner (item 11), showing refractory (item 15)
C. Disassembly of heat exchanger cover plate, burner and other components
D. Burner assembly
E. Heat exchanger interior
1. Inlet air silencer
2. Blower assembly
3. Gas valve
4. Burner access cover
5. Venturi assembly
6. Heat exchanger cover plate
7. Igniter assembly
8. Air silencer clip
9. Heat exchanger cover plate retainer nuts, (5)
10. Burner cover retainer (3) screws, M4 Phillips plus flat washers
11. Burner
12. Burner gasket
13. Burner access cover seal
14. Burner sealing surface (lower surface of burner flange)
15. Refractory
16. Cover plate gasket
17. Control module
18. Heat exchanger tube sheet
19. Heat exchanger outer shell

Cleaning Heat Exchanger Flue Side, 155 (continued)

Figure 112 Accessing the burner or heat exchanger (see Legend on page 146)

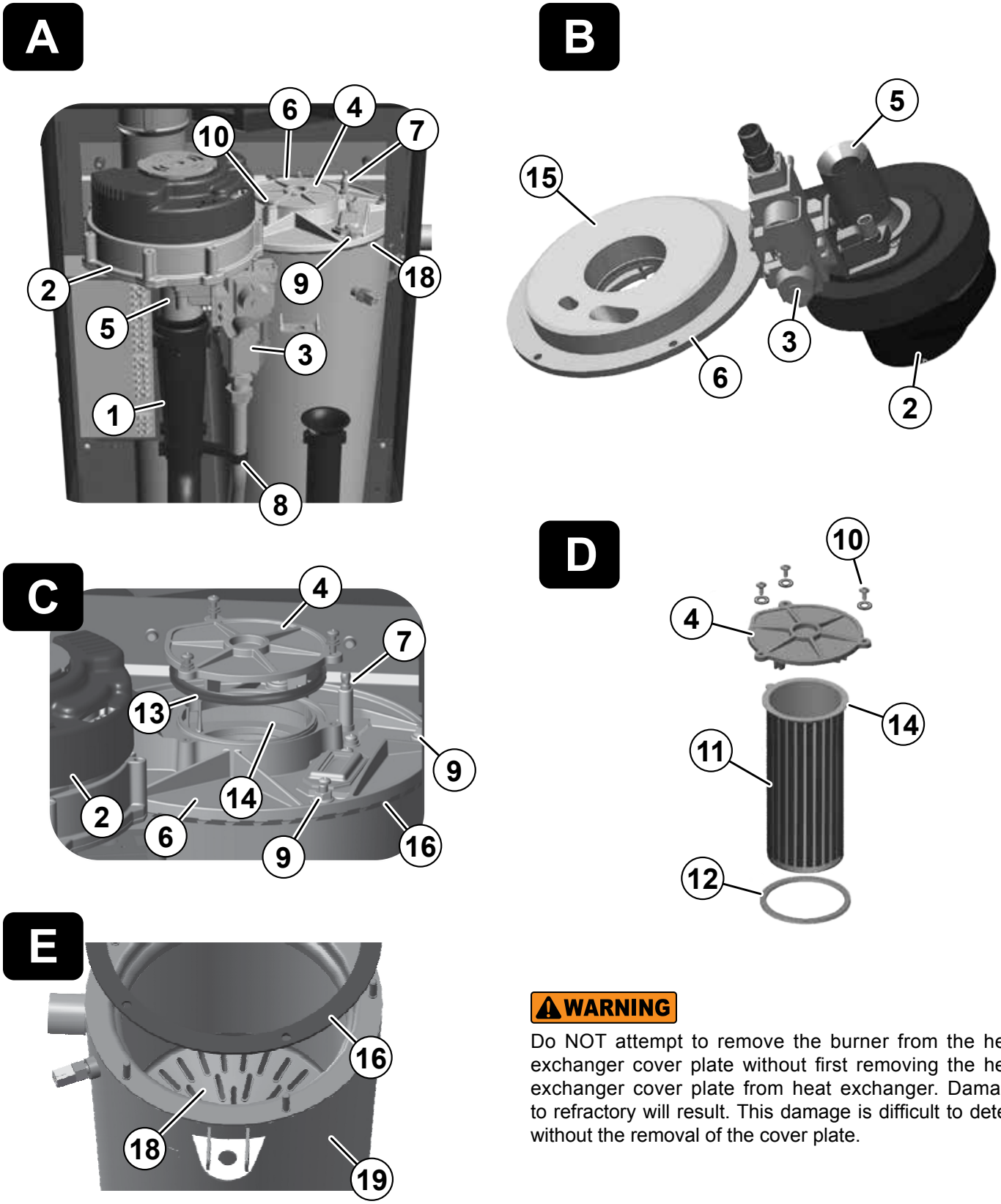

WARNING

Do NOT attempt to remove the burner from the heat exchanger cover plate without first removing the heat exchanger cover plate from heat exchanger. Damage to refractory will result. This damage is difficult to detect without the removal of the cover plate.

Cleaning Heat Exchanger Flue Side (220-399)

WARNING

The boiler contains ceramic fiber materials. Use care when handling these materials per instructions on **page 129** of this manual. Failure to comply could result in severe personal injury.

Tools Required

1. Allen wrench, 3 mm (T-wrench preferred).
2. 8 mm socket with 8 inch extension.
3. Metric wrench or socket, 10 mm.
4. T20 Torx.
5. 5/16" socket or nut driver.
6. Torque wrench.
7. Putty knife.

Before Proceeding:

1. Shut down the boiler:
   a. Follow “To Turn Off Gas to Appliance” instructions on boiler and Operating instructions.
   b. Close the boiler manual gas valve.
2. Allow time for the boiler to cool to room temperature if it has been firing.
3. Remove jacket front door by removing the two (2) latches at the top of the jacket door.
4. Rotate and lift the jacket door away from the boiler to remove.
5. See **Figure 113** (EVG 220 shown).
   a. Remove the burner access panel (item 1) located on the top of the boiler jacket by removing the screws (item 3).
   b. Remove the air baffle (item 2) and screws (item 4) from the jacket top as shown.

Remove and Inspect the Igniter Assembly

6. Carefully remove the ignition electrode assembly, following the instructions in **“Remove and Inspect Ignition Electrode Assembly and Wiring” on page 136**.
7. Set ignition electrode assembly and new gasket aside for later re-insertion.

Remove and Inspect Flame Sense Rod Assembly

1. Carefully remove the flame sense rod assembly, following the instructions in See instructions **“Remove and Inspect Flame Sense Rod and Wiring (220-399 only)” on page 136**.
2. Set the flame sense rod with new gasket aside for later re-insertion.

Figure 113 Remove the burner access panel and screws (1 and 3) and air baffle and screws (2 and 4) from the jacket top as shown

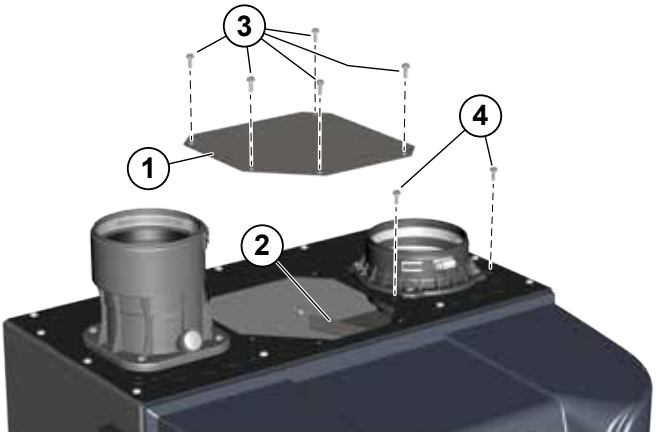

Remove and Inspect and Clean the Burner

1. See **Figure 116, page 152** (EVG 220 shown).
2. Use a T20 Torx to remove the four (4) M4 screws (item 10) that secure the burner access cover (item 4) to the heat exchanger cover plate (item 6).
3. Remove the burner access cover (item 4) and the burner (item 11).

WARNING

Use caution when removing the burner to pull it directly up and out. DO NOT angle the burner as you remove it. Angling the burner could cause it to strike the refractory, damaging the refractory and causing fragments to fall into the heat exchanger. Should this happen, a heat exchanger refractory replacement kit must be installed and the heat exchanger must be thoroughly cleaned following the procedures given in this manual and the refractory replacement instructions.

4. Remove and discard the burner gasket (item 12). This gasket is graphite and may pull apart or stick to the burner on removal. Use a soft brush if necessary to remove residue. DO NOT allow debris to drop into the heat exchanger. A new gasket must be installed later when the burner is re-inserted.
5. Inspect the burner access cover seal (item 13). Discard and use a new seal during re-assembly if the seal is damaged in any way.
6. Inspect the interior of the burner. Brush and vacuum the interior if needed to remove lint or sediment. Alternative cleaning methods:
   a. Blow air or nitrogen from the inside out.
   b. Clean with a water spray from inside the burner.
7. Inspect the burner exterior. It must be in good condition, with no visible damage.
8. Clean the under side of the burner flange (see item 15) with a soft brush to remove any gasket fragments remaining.
9. Set the burner aside for re-insertion later.

Cleaning Heat Exchanger Flue Side (220-399) (continued)

Inspect Combustion Chamber and Refractory

1. Look into the burner opening in the heat exchanger cover plate.
2. Use a trouble light and inspection mirror to inspect the heat exchanger interior.
   a. Make sure that there is no debris inside the heat exchanger.
   b. Use the inspection mirror to check the condition of the burner refractory that is adhered to the bottom of the heat exchanger cover plate. It must be in good condition with no indication of damage or sagging.
   c. Make sure there are no signs of overheating or of flue gas leakage.

WARNING

If visual inspection of the heat exchanger indicates the need, follow the procedures in the following to remove the heat exchanger cover plate and fully inspect and clean the interior. Obtain replacement parts for any components that may be damaged or that show signs of leakage.

Remove Components to Access the Heat Exchanger Flue Side

1. See **Figure 116, page 152** part A to locate components referenced in the following.
2. Remove the air silencer and disconnect gas line:
   a. See **Figure 116, page 152** part A and part B.
   b. Locate the clips connecting the air silencer (item 1) to the venturi (item 5). Gently pull clips out and away from the venturi. While holding clips out, slide silencer back and off of the venturi. Set the air silencer aside.
   c. Disconnect the flexible gas line where it connects just below the gas valve (item 3). Lay the free end of the flexible gas line to the side.

WARNING

Use two wrenches when disconnecting the flexible gas line to prevent damage to the gas valve and other gas line components.

   d. Disconnect wire harness connected to the gas valve and two wire harnesses connected to the blower.
3. Remove the blower/venturi/gas valve assembly.
   a. See **Figure 116, page 152**, part A.
   b. Remove the two (2) 8 mm locknuts connecting the blower and cover plate.
   c. Gently set blower/venturi/gas valve assembly aside. Inspect blower/cover plate gasket. If gasket appears damaged, discard and replace with a new gasket.

WARNING

The burner, igniter and flame sense rod must be removed and inspected following the procedures beginning on page 111.

4. Remove the heat exchanger cover plate:
   a. See **Figure 116, page 152** part A, part B and part C.
   b. Use a 10 mm wrench or socket to remove the nuts (item 9) that secure the heat exchanger cover plate (item 6) to the heat exchanger. [Six (6) nuts (EVG 220) or seven (7) nuts (EVG 299/300/399).]
   c. Carefully lift the cover plate assembly straight up vertically until the cover plate refractory (part D, item 16) clears the heat exchanger studs.
   d. Pull the assembly forward and out of the jacket.
   e. Turn the cover plate assembly over and place on a flat surface.

Remove and Discard Refractory and Replace Burner Gasket

1. See **Figure 116, page 152** part B and C.
   a. Use a wide-blade putty knife to gently pry the refractory from the heat exchanger cover plate. The refractory is attached with silicone adhesive and should separate with a little pressure on the putty knife.

WARNING

DO NOT gouge or crack the refractory. The refractory is made of ceramic fiber materials. Read the ceramic fiber WARNING on **page 129** before handling or disposing of ceramic fiber materials.

   b. Carefully scrape off any adhesive residue with the putty knife, avoiding scratching or gouging the heat exchanger cover plate surface.
   c. Wipe off any residue, clean off the work table surface and turn the cover plate over, bottom side on the work surface.
2. Remove the burner gasket (item 12) from the heat exchanger cover plate.
3. Clean the gasket surface with a soft brush to remove any gasket residue.
4. Lay the heat exchanger cover plate aside for re-installation later.

Inspect and Clean the Heat Exchanger

1. Remove and discard the heat exchanger cover plate gasket.
   a. The Maintenance Kit includes a new gasket for use when re-installing the cover plate.
   b. Clean off any residue on the heat exchanger cover plate gasket surface.
2. See **Figure 116, page 152** part D.
3. Use a strong light to visually inspect the interior of the heat exchanger. Make sure the flueways (tubes) are clear and unobstructed.
4. Use a vacuum cleaner to remove any accumulation on the heating surfaces. This includes removing any pieces of cover plate insulation assembly than may have dropped into the exchanger.

WARNING

DO NOT use any solvent when cleaning the heat-exchanger.

Cleaning Heat Exchanger Flue Side (220-399) (continued)

5. If the vacuum cleaner is unable to clean completely, wash the heating surfaces with clean, warm water,using the following procedure.
   a. Place a shallow pan under the boiler condensate drain connection.
   b. Loosen the condensate trap clamp (item 22) and slide the drain line off of the drain connection. (See **Figure 116, page 152** for reference.)
   c. Spray water into the heat exchanger and tubes to remove sediment. Collect water in pan below.
   d. If additional cleaning is necessary, use a pressure washer (using caution) to obtain better scrubbing action.

WARNING

Do not attempt to use hard objects to clean out the exchanger or tubes. The heat exchanger surfaces could be damaged.

Reinstall Heat Exchanger Cover Plate and Refractory

1. See **Figure 114** for reference.
2. Obtain the new refractory from the Maintenance Kit.
3. Carefully place the refractory into the top of the heat exchanger as shown.
4. Align the notch in the refractory with the front heat exchanger cover plate stud (just right of center in the front).

WARNING

DO NOT press down on the refractory. Too much force could cause the refractory to crack or be damaged.

5. Use the silicone adhesive to lay a bead of silicone in a weaving pattern as shown.
   a. Maintain at least 1 inch clearance from edges of refractory and from openings in refractory.
   b. Do not apply an excessive amount of adhesive. This could cause spreading or prevent good contact with the cover plate.
6. See **Figure 116, page 152** for reference.
7. Re-install the heat exchanger cover plate using the following procedure.
   a. Place the heat exchanger cover plate gasket, item 17, (in Maintenance Kit) onto the heat exchanger studs.
   b. Carefully place the heat exchanger cover plate over the heat exchanger cover plate studs.
   c. Gently lower the cover plate until it rests on the cover plate gasket.

Figure 114 Placing refractory into heat exchanger and applying silicone adhesive – EVG 220 shown

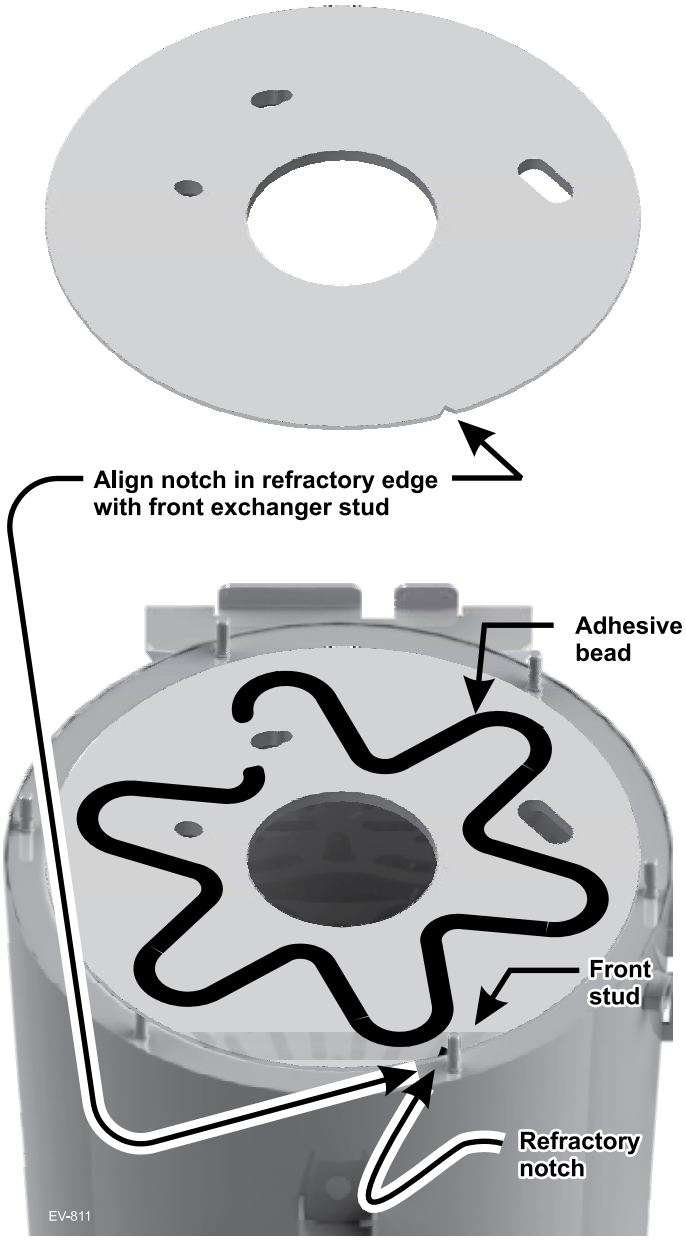

   d. Reach into the cover plate burner opening and gently pull the refractory up against the cover plate to compress the adhesive for a good seal/adhesion.
   e. Use a 10 mm wrench or socket to secure the nuts (item 9) on studs of the heat exchanger cover plate (item 6) to the heat exchanger. [Six (6) nuts (EVG 220) or seven (7) nuts (EVG 299/300/399).]
   f. Tighten the cover plate nuts gradually, adjusting a little at a time. Use criss-cross pattern and repeat until all are tightened evenly.
   g. Use a torque wrench to tighten the cover plate nuts, to a torque of 57 inch-pounds.

Cleaning Heat Exchanger Flue Side (220-399) (continued)

Reinstall Components

1. See **Figure 116, page 152** for reference.
2. Obtain the new burner gasket (item 12) from the Maintenance Kit and install into the heat exchanger cover plate.
3. Reinstall the burner (item 11), and burner access cover seal (item 13) on the heat exchanger cover plate (item 6).
   a. Insert and tighten the burner access cover screws (item 10) using a T20 Torx. Tighten screws gradually, adjusting a little at a time, using a criss-cross pattern and repeating until all are tightened evenly. The screws must be secure, with
   b. Use a torque wrench to tighten screws to a torque of 23 inch-pounds.
4. Reinstall the igniter assembly (item 7).
   a. Insert the igniter into the cover plate opening, with the new gasket in position.
   b. Reinstall the two (2) Allen head screws finger tight.
   c. Use a torque wrench to tighten screws to a torque of 20 inch-pounds.
   d. Reconnect the ignition cable and the igniter ground wire.
5. Reinstall the flame sense rod (item 8).
   a. Carefully insert the flame sense rod into the cover plate opening, with the new gasket in position.
   b. Use a torque wrench to tighten screws to a torque of 20 inch-pounds.
   c. Re-attach the wire harness to the flame sense rod.
6. Reconnect the flexible gas line to the gas valve using two wrenches.
7. Reinstall the blower/venturi/gas valve assembly:
   a. Install the two (2) 8 mm locknuts connecting the blower to the cover plate.
   b. Use a torque wrench to tighten locknuts to a torque of 20 inch-pounds.
8. Reinstall the air inlet silencer (item 1) by pressing onto the venturi (item 5). Reinstall the air inlet silencer by gently pushing the silencer onto the venturi. If needed, gently pull apart the clips to clear venturi.
9. Reconnect the wire harnesses to the blower and gas valve.
10. Reinstall the condensate trap on the boiler condensate drain connection. (See **Figure 116, page 152** part E for reference.)
11. Reinstall the burner access panel and air baffle (see **Figure 113, page 148**). Tighten screws securely.

WARNING

Perform a complete start-up procedure when putting the boiler back into service. See **page 127** and all instructions for start-up and verification. Include a soap suds leak test on all interior and exterior gas piping after starting the boiler.

After placing the boiler in operation, the ignition system safety shutoff device must be tested, **page 126**.

Figure 115 Legend for **Figure 116, page 152**

A. Boiler interior assembled view,
B. Boiler interior exploded view, showing heat exchanger cover plate (item 6) blower, burner assembly, burner access cover seal (item 13), ignitor, flame sense rod, and sight glass.
C. Blower, burner, and venturi, showing combustion chamber cover plate insulation assembly (item 16)
D. Heat exchanger interior
E. Boiler lower interior, showing condensate dish (item 19) and condensate drain line (item 22)

1. Inlet air silencer
2. Blower assembly
3. Gas valve
4. Burner access cover
5. Venturi assembly
6. Heat exchanger cover plate
7. Igniter assembly
8. Flame sense rod
9. Heat exchanger cover plate retainer nuts (6) - EVG 220, and (7) - EVG 299/300/399.
10. Burner cover retainer screws, M4 Phillips with captive washers
11. Burner
12. Burner gasket
13. Burner access cover seal
14. Burner gasket sealing surface
15. Burner sealing surface (lower surface of burner flange)
16. Combustion chamber refractory (adhered to combustion chamber cover plate with silicone adhesive)
17. Heat exchanger cover plate gasket
18. Sight glass assembly
19. Heat exchanger outer shell
20. Condensate dish
21. Condensate dish joint
22. Condensate drain line clamp
23. Condensate drain line

Cleaning Heat Exchanger Flue Side (220-399) (continued)

Figure 116 Accessing the burner or heat exchanger (see Legend on page 151), (Evergreen® Pro 220 shown).

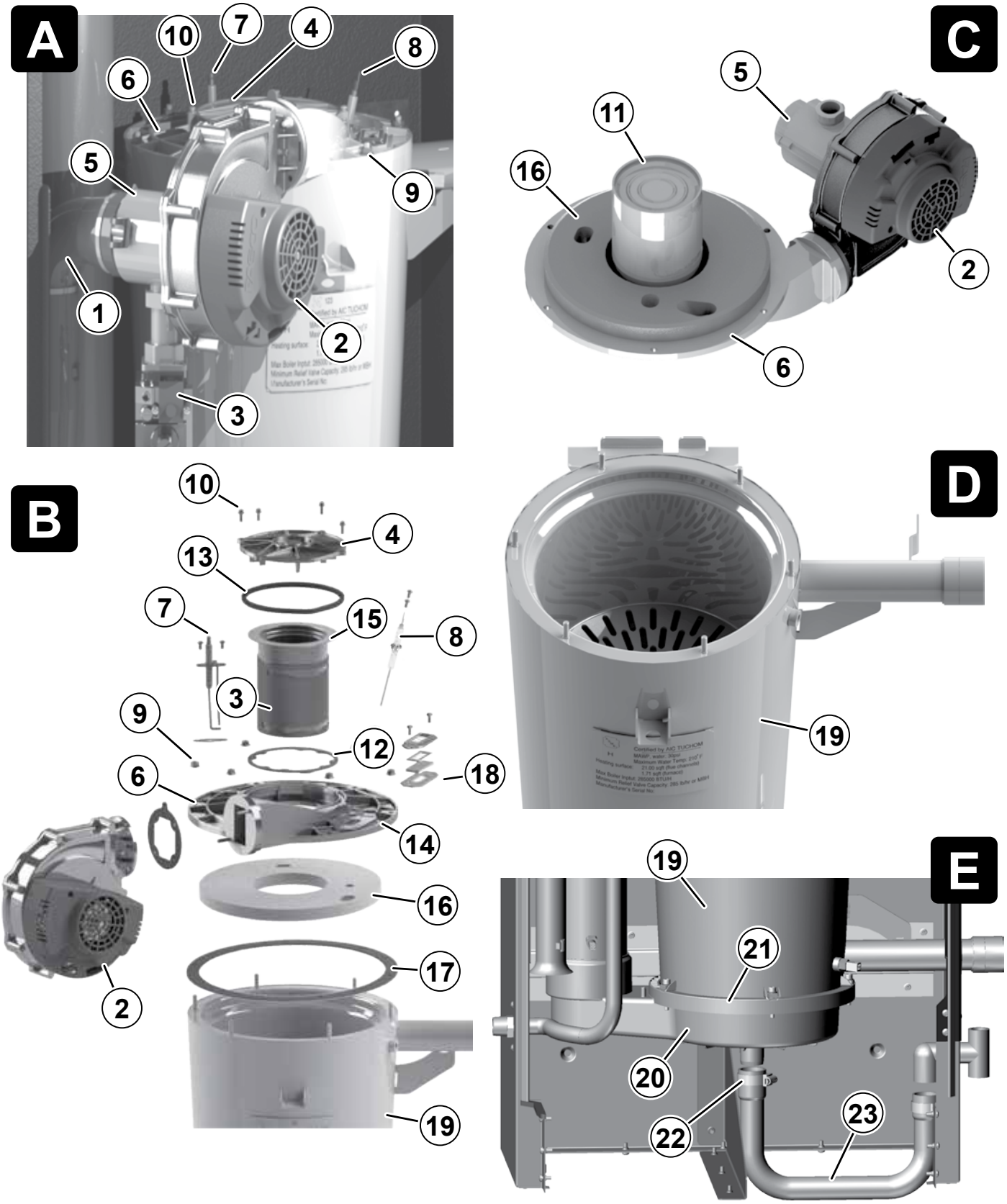

Section 6 Troubleshooting

Troubleshooting

IMPORTANT

VERIFY PROPER OPERATION AFTER SERVICING

Before calling for troubleshooting assistance, install the ProTools app (see**"WM ProTools app download" on page 197**). Record the boiler size and CP number (located on the right side exterior of the boiler jacket).

WARNING

Failure to adhere to these guidelines can result in severe personal injury, death or substantial property damage.

Electrical Shock Hazard

Turn off all power to the boiler when servicing.

Do Not Jumper Devices

Never jumper (bypass) any device except for momentary testing.

Reinstall Jacket Door

The boiler jacket door must be securely fastened to the boiler to prevent boiler from drawing air from inside the boiler room. This is particularly important if the boiler is located in the same room as other appliances. Failure to keep the jacket door securely fastened could result in severe personal injury or death.

Before Servicing or Making Connections

Always turn power off to the boiler to prevent electrical surges, which can damage boiler components.

Label Wires Before Removing

Label all wires prior to disconnection when servicing controls. Wiring errors can cause improper and dangerous operation.

BEFORE TROUBLESHOOTING

1. See **Figure 117** for tools and kits recommended for troubleshooting **Evergreen® Pro** boilers.
2. Check for 120 VAC (minimum 102 VAC to maximum 132 VAC) to boiler.

Figure 117 Tools and kits needed for troubleshooting

Tool	Purpose
#2 Phillips screwdriver	Multiple uses
3 mm Allen wrench	For removing igniter and flame sense screws
10 mm wrench	To remove heat exchanger cover plate
T20 long-handled Torx driver	To remove burner screws
T25 Torx driver	To remove gas valve
5/16" Nut driver or socket	To remove air baffle
Multimeter	Measurements on sensors and electrical components
Manometer (Inclined or digital)	Measure the INLET gas pressure to the boiler
Combustion analyzer (Digital preferred)	Combustion testing and boiler adjustments
Contact thermometer	Checking surface temperatures of heat exchanger and pipes
Maintenance kit	ALWAYS have this kit on hand when performing maintenance in case replacement is required.

Troubleshooting (continued)

Check the Following:

1. Make sure thermostat is calling for heat and contacts (including appropriate zone controls) are closed. Check for 24 VAC between thermostat wire nuts and ground.
2. Make sure all external limit controls are either installed (and closed) or temporarily jumpered for testing.
3. Make sure that connectors to the control are securely plugged in at module and originating control.
4. Gas pressures:
   - Maximum: 14" (330 mm) w.c. with no flow (gas valve lockup pressure).
   - Minimum: must be no less than the minimum values given on page 33 while operating on high fire.

Check Control Fuses

WARNING

ALWAYS check control fuses before replacing the control or any major components (blower, etc.). If one of these fuses is blown, it can prevent the control or other components from operating.

1. Turn OFF power to boiler at external line switch. Then remove the jacket door.
2. Remove control cover.
3. Locate fuses using **Figure 119**.
4. Remove and inspect the seven (7) fuses (items a, b and c, **Figure 119**).
5. If necessary, replace the fuses:
   a. Low voltage circuit fuse (Item a) is a 3-amp 24VAC fast-blow (Littelfuse 0287003).
   b. Line voltage circuit fuses (Item b) are 2.5-amp 120VAC fast-blow (Littelfuse 032602.5).
   c. Line voltage circuit fuses (Item c) are 4-amp 120VAC fast-blow (Littelfuse 314004).

WARNING

Do not jumper either fuse or replace with any fuse except as specified. Failure to comply could result in severe personal injury, death or substantial property damage.

Checking Temperature Sensors

1. The boiler temperature sensors (flue, outdoor, Boiler Inlet, Boiler Outlet and System Supply & Return) are all resistance-type devices. **Figure 118** shows the correct value for the sensor at various temperatures. For dual sensors, the temperature difference between the sensors must be no more than 10°F.
2. Use the resistance values at 32°F, 60°F, 70°F and 212°F to measure the sensor resistance at known temperatures (ice point, room temperature and sea level boiling point). For ice point and boiling point, insert the sensor in water at that temperature. Use an ohmmeter to read resistance value.
3. To check whether the control is correctly sensing temperature, you can use a resistance decade box. Connect the decade box temporarily in place of a sensor and read the corresponding temperature on the control display. The temperature should be close to the value corresponding to the input resistance.

Figure 118 Sensor resistance values

Temp (°F)	Sensor ohms		Temp (°F)	Sensor ohms		Temp (°F)	Sensor ohms	
	Min	Max		Min	Max		Min	Max
32	34265	37871	90	8504	9399	150	2517	2782
40	27834	30764	100	6847	7568	160	2091	2311
50	21630	23907	110	5545	6129	170	1744	1928
60	16944	18727	120	4517	4992	180	1461	1615
70	13372	14780	130	3698	4088	190	1229	1359
80	10629	11747	140	3043	3364	200	1038	1147

Figure 119 Control fuses

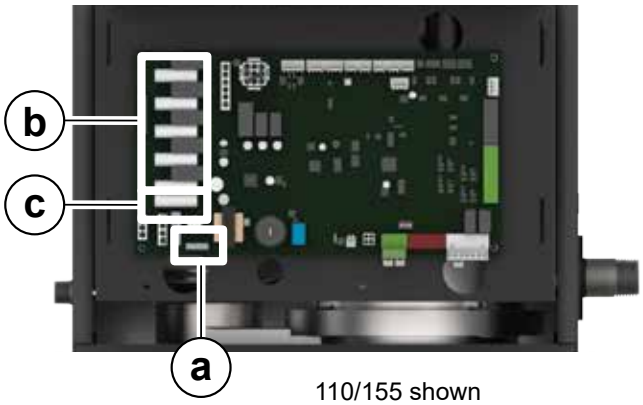

110/155 shown

Troubleshooting (continued)

WARNING

Make sure to determine the causes of outages. Do not leave the boiler operating without a complete diagnosis.

Control Fault Indications

1. The control provides diagnostic information for both automatic reset conditions and manual reset conditions. See **Figure 85, page 97** for information available on the control display and navigation instructions for all menus.
2. **Figure 120** shows the screen behavior during a fault condition. The display illustration and text below in **Figure 120** shows how to reset faults from the Home Owners screen.
3. **Figure 122, page 156** lists conditions that will cause the control to display a constant red screen. The boiler will automatically restart if the condition self-corrects or the technician uses the control's manual reset screens to reset.

Figure 120 Control display toggles when in lockout, with screen red banner

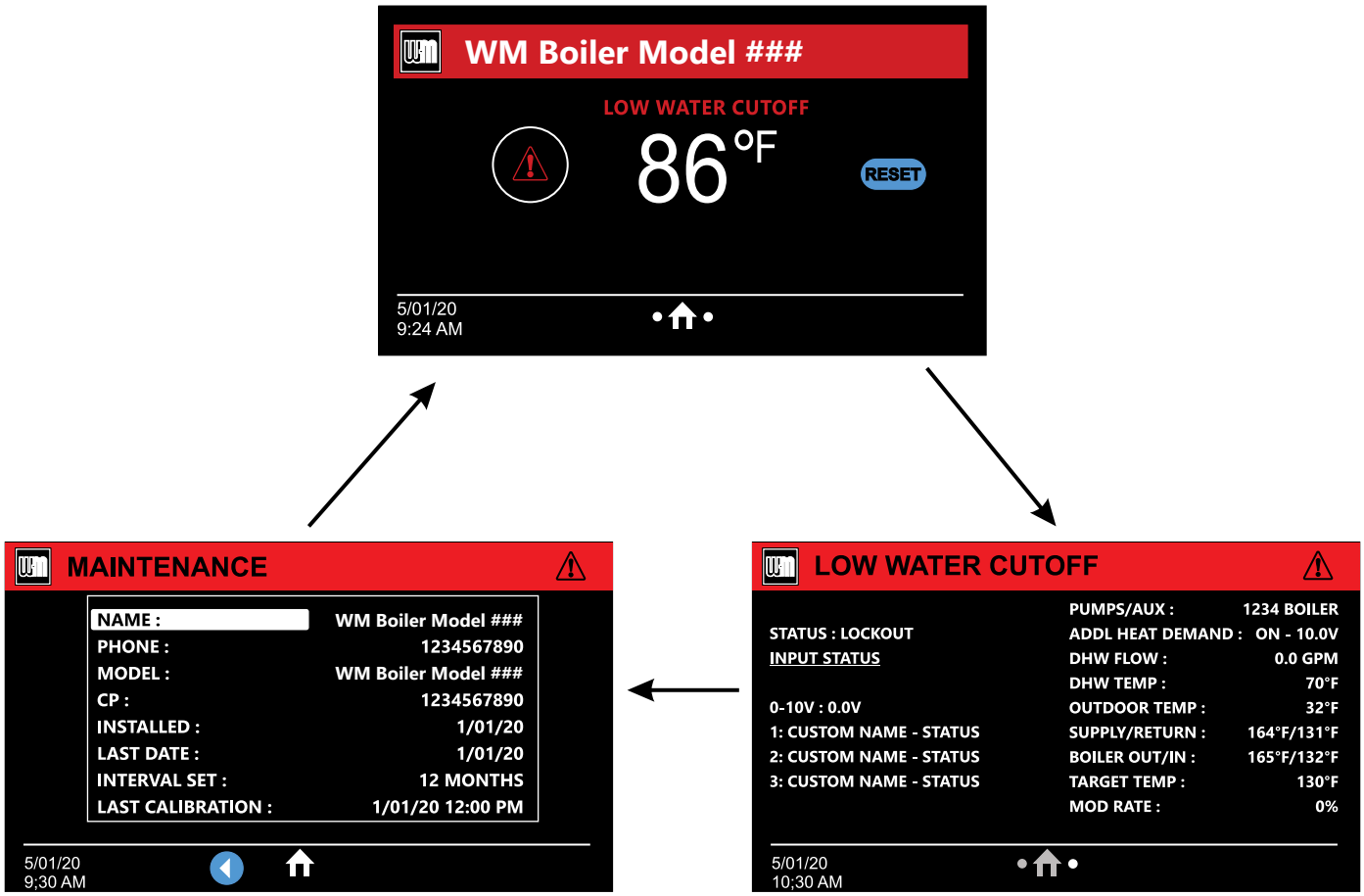

Troubleshooting (continued)

Figure 121 Troubleshooting suggestions - **control Error Condition Log**

Restart Wizard

The user must hold the button for a specified length of time. Upon completion, this will erase user specific parameter settings and take the user back through the wizard.

Once this is chosen, previous settings cannot be recovered. Ensure this action is truly desired before continuing.

Reset to Factory Default

1. The user must hold the button for a specified length of time. Upon completion, this will reset the control settings back to factory installed settings.

   Once this is chosen, previous settings cannot be recovered. Ensure this action is truly desired before continuing.

2. Reset to Factory Default can be found on the BOILER SETTINGS menu, see **Figure 88, page 107**.

Figure 122 Troubleshooting suggestions - **Control Error Condition Log**

The Control is able to record information about the boiler's condition at the time of the six previous faults or errors. This information is available to view in Contractor Menus under "DIAGNOSTICS" by selecting "FAULT HISTORY" The control will display the following information:

Information	Description	Action
Ignition Retries	Displays cumulative ignition attempts. It is recommended that this be reset during yearly maintenance.	Press and reset button to reset the count or select this parameter and press enter to reset.
Manual Reset Count	Records number of lockouts that required a manual reset since this count was last cleared.	Press the reset button to reset this count.
Auto Reset Count	Records number of lockouts that have automatically reset since this count was last cleared.	Press the reset button to reset this count.
Lockout History 1- 6	Details of present or last recorded lockout, up to 6 previous lockouts.	Select and press the right arrow key for more details.

6

How to read the last 6 lockout histories:

1. Press "DIAGNOSTICS" button.
2. Select "FAULT HISTORY" and press the right arrow key.
3. Review fault information displayed on screen.
4. Record the fault counts, (Ignition Retries, Manual Reset Count, Auto Reset Count).
5. Select "LOCKOUT HISTORY #" and press the right arrow key.

How to clear all lockout histories:

1. While on the "FAULT HISTORY" screen, hold the reset button until cleared.

Troubleshooting (continued)

Table 13 Control fault information and troubleshooting (continued on the following pages)

Fault	Condition	Troubleshooting	Action
Nothing is shown on the display screen, and the boiler will not respond to a call for heat.	Control is not receiving 24V power.	Check wiring for short circuit or incorrect wiring.	Correct wiring per wiring diagram including connection of transformer to the control.
		Check 3-amp low voltage fuse on control shown on **page 154**.	Replace fuse with proper part found in the Parts section, starting on **page 168**. If fuse blows again, recheck wiring per diagrams.
		Check transformer connection to the control per wiring diagram. Check for 24V output of transformer.	Replace transformer if it is receiving 120 Vac, but not outputting 24 Vac.
Nothing is shown on the display screen, and no other boiler components are operating.	Control is not receiving 120V power.	Check service switch and/or circuit breaker to boiler is turned on.	Turn on service switch to power boiler.
		Is there 120 Vac at the service switch?	Troubleshoot and correct the power supply to the service switch.
		Check for 120 Vac at the line voltage terminal block located at J1 on the circuit board.	Correct wiring to circuit board using the wiring diagrams in this manual.
		Inspect 4-amp fuse as shown on **page 154**. Replace if necessary.	Replace the fuse with proper part found in the Parts section, starting on **page 168**. If fuse blows again, recheck wiring per diagrams.
Nothing is shown on the display screen, but the boiler is operating.	Occurs if the communication is lost from the control to the display.	Check for loose connections and proper pin alignment and engagement on the control's plug J14, and the back of the display circuit board.	Check for continuity on the wire harness from the display to the communications board to the circuit board.
		Cycle power off and on, and check for operation.	Replace with new display module. See the Parts section starting on **page 168** for the proper part.
Boiler In Sensor Open Boiler In Sensor Short Boiler Out 1 Sensor Open Boiler Out 1 Sensor Short Boiler Out 2 Sensor Open Boiler Out 2 Sensor Short Flue 1 Sensor Open Flue 1 Sensor Short Flue 2 Sensor Open Flue 2 Sensor Short Temperature Sensor	Specified sensor is sensed as open or short.	Clears automatically when sensor is no longer open or short.	• Check for loose or damaged wires on the designated sensor and at the control board. • Replace appropriate sensor. • If issues persist, replace the control.
Boiler Output Sensor Flue Sensor	Occurs if dual temperature sensors values have spread by more that 10ºF.	Automatically resets when sensors are within 10ºF.	Follow procedure for above for SHORT and OPEN sensor conditions to properly diagnose sensors. If measured resistance values of sensors convert to temperatures separated by more than 10ºF, replace the sensors.

Troubleshooting (continued)

Table 14 Control fault information and troubleshooting (continued)

Fault	Condition	Troubleshooting	Action
Outdoor Sensor Error	Outdoor temperature sensor is short or open.	Will automatically reset if the condition clears. Warning only: Max Target Temp is targeted until Outdoor Temp is restored, if used for target adjustment.	• Determine which sensors are suspect and measure their resistance value and compare it to the values shown in **Figure 118, page 154**. If the resistance values are incorrect, replace the temperature sensor. Refer to the Parts section, starting on **page 168**, for the proper part number. • Check wire harness for loose connections and pin engagement at sensor connection, chassis mount connection through control housing, and the control. Unplug connection at sensor and at control and check continuity between ends. • If problem persists after checking Items above, replace control. Refer to the Parts section, starting on **page 168** for kit number.
Return Sensor	Occurs when Return Sensors are chosen as the Target Modulation sensors, and the Boiler Out sensor is either open or short.	Clears warning when valid sensors are detected.	• Check all the temperature readings of the boiler on the Diagnostics -> Temperatures menu to determine if any sensors are currently displayed as SHORT or OPEN. Compare this to the boiler temperatures recorded in the Diagnostics -> Errors -> Lockout History # -> Temperatures during the last several lockout conditions. • Determine which sensors are suspect and measure their resistance values. Compare to the values shown in **Figure 118, page 154**. If the resistance values are incorrect, replace the temperature sensor. Refer to the Parts section starting on **page 168** for the proper part number.
Supply Sensor	Occurs when Supply Sensors are chosen as the Target Modulation sensors, and the Boiler In sensor is either open or short.		• Check wire harness for loose connections and pin engagement at sensor connection, chassis mount connection through control housing, and the control. Unplug connection at sensor and at control and check continuity between ends. • If problem persists after checking Items above, replace control. Refer to the Parts section, starting on **page 168** for kit number.
AIR PRESSURE Switch Open 3.25" W.C. Normally Closed	Occurs when the High Flue Pressure switch is open.	Reset using Manual Reset screen on display.	Check boiler size selected in control against boiler rating label. Correct if necessary to select the proper boiler size. Check the J22 connection as seen in **Figure 79, page 84**. Check the High Flue Pressure switch (Only for 220-399; must check jumper on J22 for 110/155) per instructions on **page 135**. **For 220 – 399 models :** Check Vent & Intake pipe for blockages and pipe length does not exceed maximum lengths. Check and clean Condensate Trap and Drain. Check Termination for blockages and that the WM approved termination is installed per this manual.
Blower Fault 1	Blower does not reach zero RPM within four minutes when mode is Standby or Prepump.	Clears 30 seconds after blower is at zero RPM.	Check for loose or disconnected low voltage wires to blower motor. Inspect low voltage blower motor harness.
Blower Fault 2	Blower unable to reach required pre-purge speed or ignition speed. Blower failed to complete calibration within four minutes.	Clears automatically after 35 minutes.	• Check for loose or damaged wires on high voltage and low voltage blower motor harnesses. • Check the in-line blower fuse connected to the 120 Vac power of the blower motor. Replace fuse if necessary. • Re-calibrate blower motor in Boiler Settings menu.

Troubleshooting (continued)

Table 15 Control fault information and troubleshooting (continued)

Fault	Condition	Troubleshooting	Action
Blower Fault 3	Blower is outside of minimum or maximum speed for 10 seconds.	Clears at the end of post-purge heat state.	• Check for loose or damaged wires on high voltage and low voltage blower motor harnesses. • Re-calibrate blower motor in Boiler Settings menu.
Blower Fault 4	Blower drops to zero RPM while burner is firing.	Automatic reset if post-purge is successful. If unsuccessful, automatic reset after 35 minutes.	Check for loose or damaged wires on high voltage and low voltage blower motor harnesses. Check for voltage quality on incoming 120vAC and 24vAC power to the boiler, as well as 24vDC on Pin 1 of the blower motor.
Boiler In > Out	Occurs when the Boiler In temp is greater than either Boiler Out temps + 10F for 30 seconds, after the burner is lit for 60 seconds, and the priority has not changed in the last 60 seconds.	Automatically resets when Boiler In is 7 degrees greater than Boiler Out or less.	• Verify proper flow direction of the boiler circulator. • Check for temperature inrush/cooling from priority switching.
Clock Fault	When the real time clock chip cannot be read.	When the real time clock chip is working correctly and has had a time written to it.	• Enter an updated time/date. • If problems persist, replace display.
Closure Switch fault	Proof of Closure connections on J18, Pins 2 and 3 are open.	Soft lockout for 4 minutes then unlocks and checks for up to 4 minutes. If still open, soft lockout for 4 minutes. Repeats once more then a manual lockout.	• Flow switch attached - Check correct pump is on, check wiring to flow switch and check switch is closing. • CAD - Check voltage to damper. Check damper is opening. • None - Check jumper on correct pins and secure connection.
Communication errors	Occurs if display or main control communications is out for 30 seconds.	Automatically resets when communication is re-established.	Check for a loose connection at the Molex plug on the control and connection on the back of the display. Improper connections may display the incorrect model numbers.
Configuration fault	Configuration data in the control safety micro does not match data in the control's application micro.	Correct the invalid configuration information.	• Reconfirm all settings within the Control Settings screen. Cycle power to the unit. • Perform a factory reset by going to Diagnostics -> Control Settings -> Factory Default Reset, and follow the on-screen instructions.
Control fault	Occurs when micro-controllers on main board have a RAM or ROM error.	Check for hardware damages.	• RAM or ROM errors can be reset with the manual reset option. • If problems persist, replace main board.

Troubleshooting (continued)

Table 16 Control fault information and troubleshooting (continued)

Fault	Condition	Troubleshooting	Action
FALSE FLAME	Occurs if flame is detected when there should be no flame.	Reset using manual reset screen on display.	Burner may be operating too hot due to incorrect combustion. Inspect flame and conduct combustion test. Force boiler into high fire. Check flue gases with combustion analyzer. Correct using the maintenance and startup procedure in this manual.
			Verify FLAME SIGNAL value quickly goes to zero on the Diagnostics -> Inputs screen when the gas valve closes.
			Check for flame at burner via flame current with burner off. Turn boiler off and watch flame through observation port. If flame continues after shutdown, replace the gas valve.
Flame Circuit Fault	When the digital flame input does not sense that the circuit discharged appropriately.	Unit receives manual reset.	• Power cycle the boiler. • If problems persist, replace the control.
FLAME LOSS FAULT	Flame value dropped below the allowable Proof of Flame threshold while running.	Automatically resets after one hour or can be reset by performing manual reset on boiler.	• Check condensate trap for blockage allowing condensate to accumulate inside heat exchanger. • Check ignition cable connection.
			• Fouled, worn, bent, or faulty igniter (110/155) or flame sense rod (220-399). • Fouled ignition electrode (110/155) or flame sense rod (220-399) can be cleaned for additional use with steel wool. Worn or badly fouled ignition electrode (110/155) or flame sense rod (220-399) should be replaced with the proper repair part. • Igniter rods should be parallel with a 3.5 mm (0.138") spark gap for 110, & 220-399; 4.8mm (.189") for 155. **WARNING** ***Thin white deposits on the igniter and/or flame sense rod (220-399 only) are typical, but brown or black deposits could be the result of flue gas recirculation. Thoroughly inspect the venting system and termination for the possibility of leakage or flue gas feedback into the air line. Failure to fix these issues can result in severe personal injury, death, or substantial property damage.***
			Dirty burner or heat exchanger will cause high back pressure and poor ignition. Follow instructions starting on **page 141** to clean the burner and heat exchanger. Visual inspection of flue ways may not be sufficient to diagnose the condition.
			Check combustion settings on high and low fire. Adjust per setup instructions if necessary. Check flame signal during combustion testing; see **page 135**.
			Check incoming gas pressure with boiler off and at high fire. Adjust within limits on rating label.
			Verify correct boiler model is selected in control and high altitude is selected for installations 2,000 above sea level.
			Check that ignition cable resistance measures 1000 Ohms (+/- 50 Ohms).
			Check for flue pipe and intake pipe restrictions or blockage.
			Check burner fasteners and gaskets.
			Check venturi gaskets and proper venturi. Propane models use different venturis.

Troubleshooting (continued)

Table 17 Control fault information and troubleshooting (continued)

Fault	Condition	Troubleshooting	Action
FLUE TEMP TOO HIGH	Occurs if flue temperature sensor exceeds 210ºF (Warning) or 220ºF (Lockout).	• Automatic reset occurs if temperature drops below 210ºF for 2½ minutes. • Manual reset is required if the temperature rises above 220° F. Reset using manual reset screen on display.	• Follow procedure above for SHORT and OPEN sensor conditions to properly diagnose sensor. In addition inspect heat exchanger combustion chamber and flue ways for abnormal wear or buildup. • Inspect vent system for abnormal wear or damage. • Contact WM Technologies Technical Support for assistance as needed.
GAS RELAY FAULT 1-4	The control has detected a problem with the control board's gas valve output circuit.	Control will do automatic retry; lockout if retry is unsuccessful. Retry one hour after lockout — restart if condition cleared, but lockout requiring manual reset if condition still present.	• Requires manual reset if control is in lockout. • If lockout reoccurs replace control.
Hardware A2D Fault	The analog reading of the internal voltage reference on U1 reads out of range two times in a row.	Clears when the analog internal voltage reference is within range.	• Power cycle the boiler. • If problems persist, replace the control.
HIGH TEMP LIMIT	Boiler temperature sensor reached High Temp Limit setting.	Reset using manual reset screen on display.	Verify that high limit setting is at least 10° F above the maximum target temperature plus the off differential.
			• Verify all isolation valves are open and circulators are programmed into the control properly. • The boiler circulator output and System Pump/Aux output can be configured to turn on or off with each priority. Refer to **page 107** to configure these properly for the system.
			Verify water pipe is installed correctly per instructions in this manual.
			Verify proper circulator sizing for boiler size and system requirements.
			See message displayed for the temperature sensor (boiler in, boiler out, flue, and temperature sensors) and follow procedure for loose connections.

6

Troubleshooting (continued)

Table 18 Control fault information and troubleshooting (continued)

Fault	Condition	Troubleshooting	Action
IGNITION 1 FAULT	Boiler went through five ignition attempts and either never detected flame, or flame sense value never reached proof of flame threshold of 0.8 uA or greater within the flame proving period.	Reset using manual reset screen on display.	• Check condensate trap for blockage allowing condensate to accumulate inside heat exchanger. • Check ignition cable connection. • Check Flame Sense Rod harness and connections
IGNITION 2 FAULT	Boiler went through five ignition attempts and did not meet running flame threshold for boiler model within 10 seconds		• Fouled, worn, bent, or faulty igniter. • Fouled ignition electrode can be cleaned for additional use with steel wool. Worn or badly fouled ignition electrode should be replaced with the proper repair part. • Igniter rods should be parallel with a 3.5 mm (0.138") spark gap for 110, & 220-399; 4.8mm (.189") for 155. **⚠WARNING** ***Thin white deposits on the igniter are typical, but brown or black deposits could be the result of flue gas recirculation. Thoroughly inspect the venting system and termination for the possibility of leakage or flue gas feedback into the air line. Failure to fix these issues can result in severe personal injury, death, or substantial property damage.***
			Dirty burner or heat exchanger will cause high back pressure and poor ignition. Follow instructions starting on **page 141** to clean the burner and heat exchanger. Visual inspection of flue ways may not be sufficient to diagnose condition.
			Check combustion settings on high and low fire. Adjust per setup instructions if necessary. Check flame signal during combustion testing; see **page 135**.
			Check incoming gas pressure with boiler off and at high fire. Adjust within limits on rating label.
			Verify correct boiler model is selected in control and high altitude is selected for installations 2,000 above sea level.
			Check that ignition cable resistance measures 1000 Ohms (+/- 50 Ohms).
			Check for flue pipe and intake pipe restrictions or blockage.
			Check burner fasteners and gaskets.
			Check venturi gaskets and proper venturi. Propane models use different venturis.
Internal Clock Fault	Occurs when the internal clock of the control is out of sync.	Clears when the control sees a valid clock count within the control.	• Cycle power of the boiler. • Check the wiring of the display. • If problem persists, replace display.
LIMIT OPEN	Occurs if manual or automatic reset limit opens.	• Automatic external limit will reset 2½ minutes after external limit device closes. • Manual limit fault must be reset by choosing Manual Reset on the display.	Is there an external safety device connected? If yes, troubleshoot the external limit to determine and correct the cause that opened the limit. Also check for loose wiring connections.
			• Remove the Control cover and inspect the connector. • Ensure a jumper is installed across the MAN LIMIT terminals if not using a manual reset external limit. • Ensure a jumper is installed across the AUTO LIMIT terminals if not using a automatic reset external limit.

Troubleshooting (continued)

Table 19 Control fault information and troubleshooting (continued)

Fault	Condition	Troubleshooting	Action
LOW FLAME SHUTDOWN	Flame quality dropped below allowable Running Flame Threshold, but it did not go out.	Automatically clears when pre-purge is reached.	• Fouled, worn, bent, or faulty igniter (110/155) or flame sense rod (220-399). • Fouled ignition electrode (110/155) or flame sense rod (220-399) can be cleaned for additional use with steel wool. Worn or badly fouled ignition electrode (110/155) or flame sense rod (220-399) should be replaced with the proper repair part. • Igniter rods should be parallel with a 3.5 mm (0.138") spark gap for 110, & 220-399; 4.8mm (.189") for 155. **WARNING** ***Thin white deposits on the igniter and/or flame sense rod (220-399 only) are typical, but brown or black deposits could be the result of flue gas recirculation. Thoroughly inspect the venting system and termination for the possibility of leakage or flue gas feedback into the air line. Failure to fix these issues can result in severe personal injury, death, or substantial property damage.***
			Dirty burner or heat exchanger will cause high back pressure and poor ignition. Follow instructions starting on **page 141** to clean the burner and heat exchanger. Visual inspection of flue ways may not be sufficient to diagnose condition.
			Check combustion settings on high and low fire and adjust per setup instructions if necessary. Check flame signal during combustion testing.; see **page 135**.
			Check incoming gas pressure with boiler off and at high fire. Adjust within limits on rating label.
			Verify correct boiler model is selected in control and high altitude is selected for installations 5,500 above sea level.
			Check that ignition cable resistance measures 1000 Ohms (+/- 50 Ohms).
			Check for flue pipe and intake pipe restrictions or blockage.
			Check burner fasteners and gaskets.
			Check venturi gaskets and proper venturi. Propane models use different venturis.
LOW WATER or LWCO J9 OPEN	Occurs if the LWCO Sensor sees no water.	Manual reset of control if contacts are open.	• Check for low water condition in system. Repair system as necessary. Refer to the water piping section of this manual, starting on **page 58**. • Check if LWCO Sensor test button is stuck. If so, replace control.
LOW WTR CUTOFF OPEN or LWCO J21 OPEN	Occurs if alternate LWCO contacts open.	Manual reset of control if contacts are open.	• Check for low water condition in system. Repair system as necessary. Refer to the water piping section of this manual, starting on **page 58**. • If low water condition does not exist, check Diagnostics -> Inputs screen to view status of LWCO. If the LWCO is shown as OPEN, check wiring between LWCO and control. If wiring is fine, remove LWCO and clean the probe. If the problem still exists, replace the LWCO.
LOW WTR CUTOFF WARNING	Occurs if the LWCO needs to be cleaned.	Automatically clears when the condition no longer exists.	Follow maintenance instructions for removal and cleaning of LWCO probe.

Troubleshooting (continued)

Table 20 Control fault information and troubleshooting (continued)

Fault	Condition	Troubleshooting	Action
Software Incompatible	Main control and display software are not compatible.	Unit is updated to matching software.	Check software versions for main control and display. Replace the hardware that is the incorrect software version.
Supply 60F > Return	• Occurs if either Boiler Out temperatures are greater than Boiler In temperature by more than 60F, or the burner has been on for less than 2 minutes. • If this condition occurs when the burner has been on for more than 2 minutes, the burner stops firing but no message or lockout occurs.	The first time a lockout occurs, the time to clear is 2 minutes 30 seconds. The second time, the lockout is 3 minutes 30 seconds. The third time, its 4 minutes 30 seconds, the fourth time its 5 minutes 30 seconds. The fifth time its 6 minutes 30 seconds. The system will retry, indefinitely, every 6 minutes 30 seconds as long as the temperatures return to < 60 degrees. If the burner fires for at least 2 minutes without the temperature difference exceeding 60 degrees, the time condition for the > 60 degree soft lockout is reset back to the minimum value of 2 minutes 30 seconds.	• Ensure proper water flow is present through boiler. • Ensure circulators are sized correctly per the system installation and are installed correctly. • Check wiring to circulators.
System Return > Supply	Occurs when the System Return temp is greater than the System Supply temp + 10F, after the burner is lit for 10 minutes, and the priority has not changed in the last 10 minutes.	Automatically resets when condition no longer exists.	• Verify proper placement of system sensors. System sensors should be on system piping not on the boiler loop. • Verify sensors are wired to correct terminal locations. • System sensors may need to be located further away from the boiler loop connection to the system, if proximity to the boiler loop is causing sensors to be heated inaccurately.
Target Reduced – Boiler	Boiler Outlet sensor detected above Max Boiler Temp minus Boiler Out On Diff. This fault can only occur if using System Supply or DHW Out as a modulation sensor*	Clears warning when Boiler Outlet sensor is detected below Max Boiler Temp minus Boiler Out On Diff.	No corrective action required. Boiler is operating normally.
Target Reduced – Flow	Boiler Outlet sensor detected > Boiler Inlet sensor + 50°F. Modifies Target temperature to prevent over-stressing the heat exchanger.	Clears warning and target modification when Boiler Outlet sensor is detected ≤ Boiler Inlet sensor + 50°F.	• Check water flow through the boiler heat exchanger. • Check circulators for malfunction or wiring issues.
Target Reduced – Flue	Flue temperature detected between 200°F and 210°F. Modifies target temperature to prevent overheating flue.	Clears warning when Flue temperatures have been below 200°F and the target has returned to its original setpoint, then one hour of burner run time has elapsed without the Flue temperature exceeding 200°F.	• Check the flue pipe for any blockages. • Check the CO_2 readings using an analyzer and adjust gas valve accordingly to match nominal CO_2 readings within the boiler manual.
TEMP RISE TOO QUICKLY	Occurs if supply water temperature in heat exchanger rises faster than 10ºF per second for two seconds during the first two minutes the burner is on.	• Automatically resets after one minute delay or using manual reset on display. • Manual reset is necessary after 5 automatic resets have occurred during the same Priority heat demand. Reset using manual reset screen on display.	Verify water pipe is installed correctly per instructions in this manual. Verify proper circulator and speed for boiler size and system requirements. See message displayed TEMPERATURE SENSOR and follow procedure for loose connections.
Unconfigured Net 1 or Net 2 Demand	Net 1 or 2 input active when its priority settings have not been configured.	Clears once configured. Boiler will not run this priority while this warning is active.	Configure Net 1 or 2 priority settings in the system settings menu.
Virtual Input Active	If Modbus is activating any virtual TT input.	No virtual inputs are active.	Check Modbus communication device for virtual TT input commands.

Section 7
Parts

WARNING

Do not service the boiler without a maintenance kit evg available

The maintenance kit includes components that may have to be replaced when accessing or disassembling parts of the boiler. Failure to replace damaged components and to use only the parts specifically intended for the boiler can result in severe personal injury, death or substantial property damage. See **Figure 125, page 167** for part number.

REPLACEMENT PART NUMBERS

Weil-McLain part numbers are found in this manual and in *Weil-McLain Boilers and Controls Repair Parts Lists*.

WHEN OPERATING THE BOILER ON PROPANE GAS

WARNING

ALL Evergreen® Pro boilers must be converted in order to operate with propane gas.

Figure 123 Propane conversion kits and instructions

Boiler model	Kit part number	Installation instructions
EVG 110	540-131-088	See **page 22**
EVG 155	540-202-839	See **page 25**
EVG 220	383-900-322	See **page 28**
EVG 299/300	383-900-323	See **page 28**
EVG 399	383-900-324	See **page 28**

WARNING

Failure to adhere to these guidelines can result in severe personal injury, death or substantial property damage.

Obtain Parts Only Through Weil-Mclain

Replacement parts must be purchased through a local Weil-McLain distributor. When ordering, specify boiler model and size and include description and part number of replacement part. Results from using modified or other manufactured parts will not be covered by warranty and may damage boiler or impair operation.

The Boiler Contains Ceramic Fiber Materials

The boiler contains ceramic fiber materials. Use care when handling these materials per instructions on **page 129** of this manual. Failure to comply could result in severe personal injury.

Reinstall Jacket Door

Inspect boiler jacket door gaskets on front of cabinet and reinstall boiler jacket door after start or servicing. The boiler jacket door must be securely fastened to the boiler to prevent boiler from drawing air from inside the boiler room. This is particularly important if the boiler is located in the same room as other appliances. Failure to keep the jacket door securely fastened could result in severe personal injury or death.

Before Servicing Or Making Connections -

Always turn power off to the boiler to prevent electrical surges, which can damage boiler components.

Label Wires Before Removing

CAUTION

Label all wires prior to disconnection when servicing controls. Wiring errors can cause improper and dangerous operation.

Go to www.weil-mclain.com to locate Weil-McLain distributors

Accessory Parts

Figure 124 Accessory parts and kits

Description	Part Number
CHEMICALS	
Antifreeze, Sentinel X500, 1 Gallon	592-900-029
Antifreeze, Sentinel X500 (5 gal)	592-900-006
Corrosion inhibitor, Sentinel X100	592-900-002
Sentinel X100 Quick Test Kit	592-900-005
System Restorer, Sentinel X400, 1 Gallon	592-900-028
BOILER ACCESSORIES	
EVG 110 maintenance kit - igniter, igniter gasket, venturi gasket, cover plate gasket, venturi-gas valve o-ring, refractory, silicone, inhibitor test kit, clips and manuals	383-700-243
EVG 155 maintenance kit - igniter, igniter gasket, venturi gasket, cover plate gasket, venturi-gas valve o-ring, refractory, silicone, inhibitor test kit, clips and manuals	383-700-200
Evergreen® Pro Inspection kit (220-399) - igniter gasket, flame sense gasket, burner gasket, burner access cover seal, and hardware	383-900-097
Evergreen® Pro 220 maintenance kit - flame sense rod, flame sense gasket, igniter, igniter gasket, venturi gasket, cover plate gasket, venturi-gas valve o-ring, refractory, silicone, inhibitor test kit, burner access cover seal, and hardware	383-900-337
Evergreen® Pro 299/300 maintenance kit - flame sense rod, flame sense gasket, igniter, igniter gasket, venturi gasket, cover plate gasket, venturi-gas valve o-ring, refractory, silicone, inhibitor test kit, burner access cover seal, and hardware	383-900-338
Evergreen® Pro 399 maintenance kit - flame sense rod, flame sense gasket, igniter, igniter gasket, venturi gasket, cover plate gasket, venturi-gas valve o-ring, refractory, silicone, inhibitor test kit, burner access cover seal, and hardware	383-900-339
Wall-mount kit - wall mount bracket and hardware 220-399 only	383-900-074
Alternate Low Water Cut Off Kit (If desired, instead of the LWCO Sensor shipped with boiler, that plugs into J9 connector, see **page 184** through **page 187**)	511-100-005
Relief Valve (80 psi) and P&T Gauge Kit	383-900-082
Relief Valve (50 psi) Kit	383-600-090
System Immersion Temperature Sensor (2 required) 1/2" NPT, 3.5" probe	384-000-292
Protonode Conversion Kit –Bacnet	383-600-322
Variable Speed Taco Circulator 0026e 220-399	383-900-345
EVG Easy-Up Manifold (110-220)	383-900-125
EVG Easy-Up Manifold (299-399)	383-900-126

Description	Part Number
CONDENSATE HANDLING ACCESSORIES	
Condensate drain tube - EVG 220	560-907-767
Condensate drain tube - EVG 299/300/399	560-907-768
Condensate neutralizer kit	383-500-631
Condensate trap kit (supplied with boiler) (110/155 only) - condensate trap assembly and flexible line	560-907-722
VENT/AIR PARTS AND KITS (PVC or STAINLESS STEEL) available from Weil-McLain	
Weil-McLain Direct Exhaust Venting Kit (110/155 only) Includes interior/exterior intake/exhaust plates. vent screens, templates and mounting hardware	383-500-778
Direct Exhaust Kit (220-399 only) (Includes mounting plates for intake and exhaust for inside and outside, vent screen 3 & 4 inch, Template vent/air termination hole, and mounting hardware)	383-500-769
Weil-McLain sidewall vent/air cap termination kit for PVC vent and air pipes (Includes W-M sidewall vent/ air termination cap, inside and outside cover plates, and mounting hardware)	
(EVG 155, 220) – 3" Kit	383-500-397
(EVG 220, 299, 300 & 399) – 4" Kit	383-500-398
Weil-McLain sidewall vent/air cap termination kit for AL29-4C vent pipe and PVC air pipe Includes sidewall vent/air termination cap, inside and outside cover plates, and mounting hardware; openings are sized for 3" SS vent pipe and 3" PVC air pipe	382-200-430
Sidewall separate pipes vent/air termination kits (includes two cover plates)	
Kit for 3" or 4" PVC vent and air pipes	383-500-100
Kit for 3" AL29-4C SS vent pipe and PVC air pipe	383-700-172
PVC concentric vent kit - horizontal or vertical (includes components for concentric assembly)	
Kit for 3" PVC vent and air pipes	383-500-350
Kit for 4" PVC vent and air pipes	383-900-075
Bird screens (1 screen each)	
For 3" PVC vent and air pipes	383-500-105
For 4" PVC vent and air pipes	383-500-110
IPEX PVC concentric vent kit - available from IPEX	
Kit for 3" PVC vent and air pipes	196006 (L=20") 196106 (L=32") 196116 (L=44")
Kit for 4" PVC vent and air pipes	196021

7

Accessory Parts (continued)

Figure 125 Accessory parts and kits

Description	Part Number
VENT/AIR PARTS AND KITS (POLYPROPYLENE PIPE) available from M&G Simpson-Duravent ONLY	
M&G Simpson-Duravent PolyPro SIDEWALL concentric vent/air kit (color: white) 3" polypropylene pipe	3PPS-HK
M&G Simpson-Duravent PolyPro VERTICAL concentric vent/air kit; color = black (part number shown) or terra cotta (add -TC suffix) 3" polypropylene pipe	3PPS-VK
M&G Simpson-Duravent PolyPro SIDEWALL separate air and vent pipes 3" polypropylene pipe	3PPS-HTP
M&G Simpson-Duravent PolyPro Polypropylene pipe appliance adapter 3"	3PPS-03PVCM-3PPF
M&G Simpson-Duravent PolyPro VERTICAL concentric vent/air kit; - available from vent manufacturer 3" polypropylene pipe (Black) (Terra Cotta) 4" polypropylene pipe (Black) (Terra Cotta)	 3PPS-VKL 3PPS-VK-TCL 4PPS-VKL 4PPS-VK-TCL
PP Appliance Adapters 4" M&G Simpson-Duravent	4PPS-04PVCM-4PPF
VENT/AIR PARTS AND KITS (POLYPROPYLENE PIPE) available from Centrotherm Eco Systems ONLY	
Centrotherm INNOFLUE SIDEWALL concentric vent/air kit 3" polypropylene pipe 3" stainless steel/pp pipe	 ICWT352 ICWS3513
Centrotherm INNOFLUE VERTICAL concentric vent/air kit 3" polypropylene pipe	ICRT3539
Centrotherm INNOFLUE Polypropylene pipe appliance adapter 3"	ISAAL0303
Centrotherm INNOFLUE VERTICAL concentric vent/air kit; - available from vent manufacturer 3" polypropylene pipe 4" polypropylene pipe	 ICRT3539 ICRT4679
PP Appliance Adapters 4" Centrotherm INNOFLUE	ISAAL040Y

7

Replacement Parts

Figure 126 Jacket parts - **EVG 110/155** (see **Figure 127, page 169** for illustration)

Item	Name	Description / contents	Part Number
100	Jacket door kit	Jacket door, labels, seals, and screws	383-900-170
110	Wall-mount bracket and bumper kit (wall and boiler side)	Bracket, hardware, and bumpers	383-900-164
120	Jacket upper panel kit - Series 2	Jacket upper panel, gaskets, and hole plug	383-900-300
130	Door latch (2 required)	Includes rivets	383-700-122
140	Flue pipe gasket kit	Gaskets fit internal flue pipe to adapter, pipe adapter to cabinet, pipe adapter to system pipe	383-900-167
150	3" Flue adapter (3 in 1)	Top flue adapter with internal gasket	383-900-310
160	Boiler flue pipe 110/155 - Series 2	Internal flue pipe and gasket	383-900-311
170	3" air inlet adapter	Top air inlet adapter with internal gasket	383-900-313
180	Jacket bottom panel kit	Jacket bottom panel, gasket and screws	383-900-103
190	Air baffle and screws	Air baffle and screws	383-800-223
200	Pipe grommet	Seals water pipes to cabinet	562-248-740
220	Display bracket kit - Series 2	Display board bracket and gaskets	383-900-302
230	Condensate bracket 110 (not shown)	Bracket and plastic rivets	383-700-238
240	Condensate bracket 155 (not shown)	Bracket and plastic rivets	383-700-239
250	Floor stand assembly	Floor stand and leveling legs	383-900-106
260	Terminal block bracket 110/155 - Series 2	Terminal block bracket and hardware	383-900-328
270	Control bracket 110/155 - Series 2	Control bracket and hardware	383-900-301
280	Control cover		383-900-331

Replacement Parts (continued)

Figure 127 Jacket assembly - **EVG 110/155** (see **Figure 126, page 168** for part numbers)

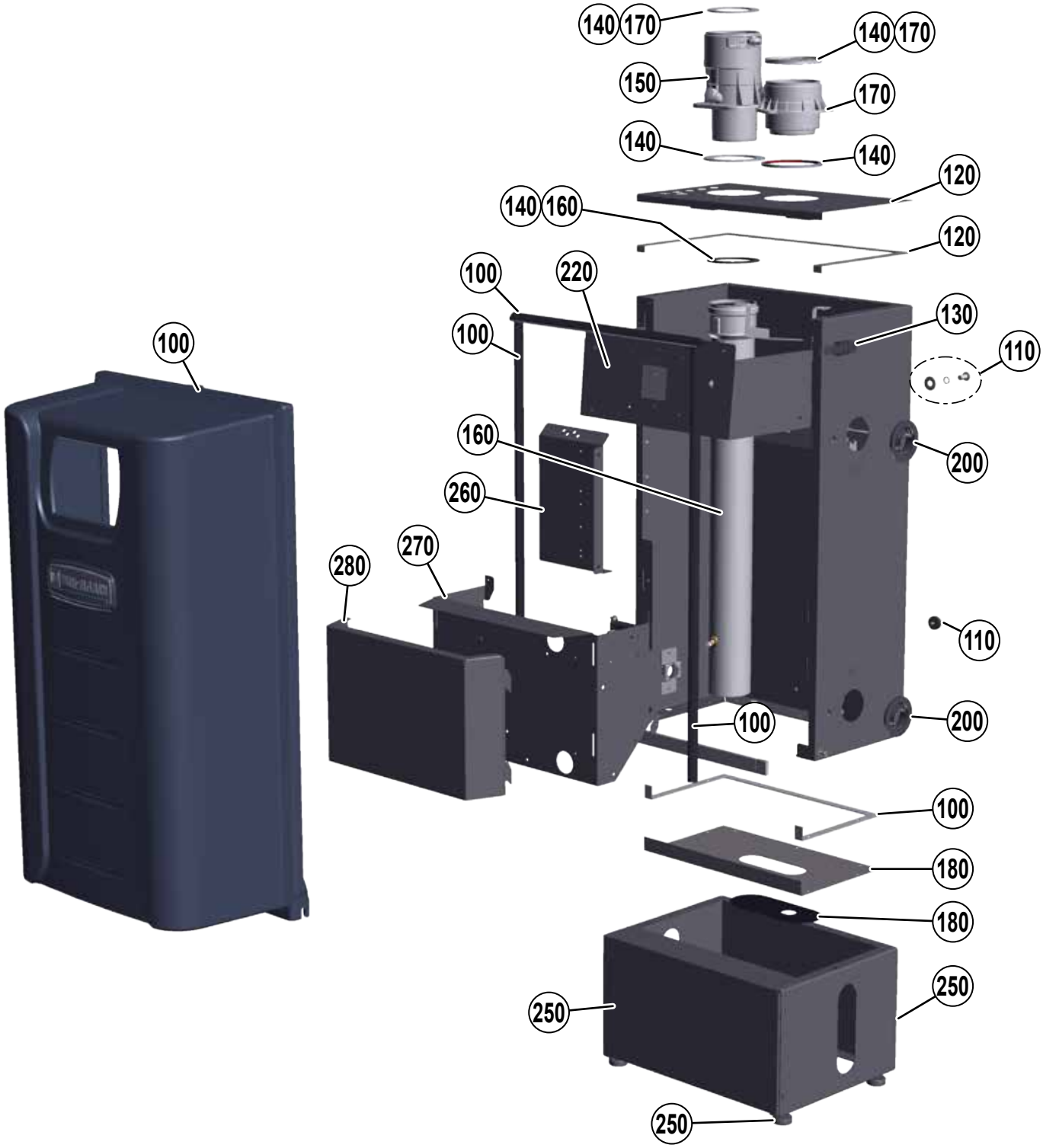

Replacement Parts (continued)

Figure 128 Jacket parts - Evergreen® Pro **220/299/300/399** (see **Figure 129, page 171** for illustration)

Item	Name	Description / contents	Part Number
100	Front door	(Includes W-M badge and door gaskets)	383-900-171
120	Wall-mount bracket (jacket side)	(Includes screws)	383-900-086
130	Door latch (2 required)	(Includes rivets)	383-700-122
140	Gasket kit	(Includes flue pipe gaskets and condensate dish gasket)	See **page 177** for 220 See **page 179** for 299/300/399
150	4" flue pipe adapter (3 in 1)	Top flue adapter with internal gasket	383-900-303
160	Boiler flue pipe - 220-399 Series 2	Internal flue pipe and gasket	383-900-304
170	4" Air inlet adapter	Top air inlet adapter with internal gasket	383-900-305
180	Gasket - pipe adapter to cabinet	Gasket - flue adapter to cabinet	383-900-058
190	Gasket - pipe adapter to system pipe	Gasket fits inner diameter of top adapter	590-318-106
200	Jacket panel bottom	(Includes bottom gasket, leveling legs and screws)	383-900-042
210	Jacket panel top - Series 2	(Includes top gasket and screws)	383-900-306
250	Bracket piping (2 required)	(Includes screws)	383-900-085
260	Air baffle	(Includes screws)	383-900-084
280	Grommet sealing (2 required)	Sealing water pipes to cabinet	562-248-762
290	Bracket mounting heat exchanger	(Includes screws)	383-900-087
300	Panel - burner access	(Includes hardware)	383-900-041
310	Pressure switch	Set point 3.25" W.C. (Normally Closed)	383-900-080
320	Tube - pressure switch		590-300-056
330	Control Bracket 220-399 - Series 2	Control bracket and hardware	383-900-329
340	Control cover		383-900-331

Replacement Parts (continued)

Figure 129 Jacket assembly - Evergreen® Pro **220/299/300/399** (see **Figure 128, page 170** for part numbers)

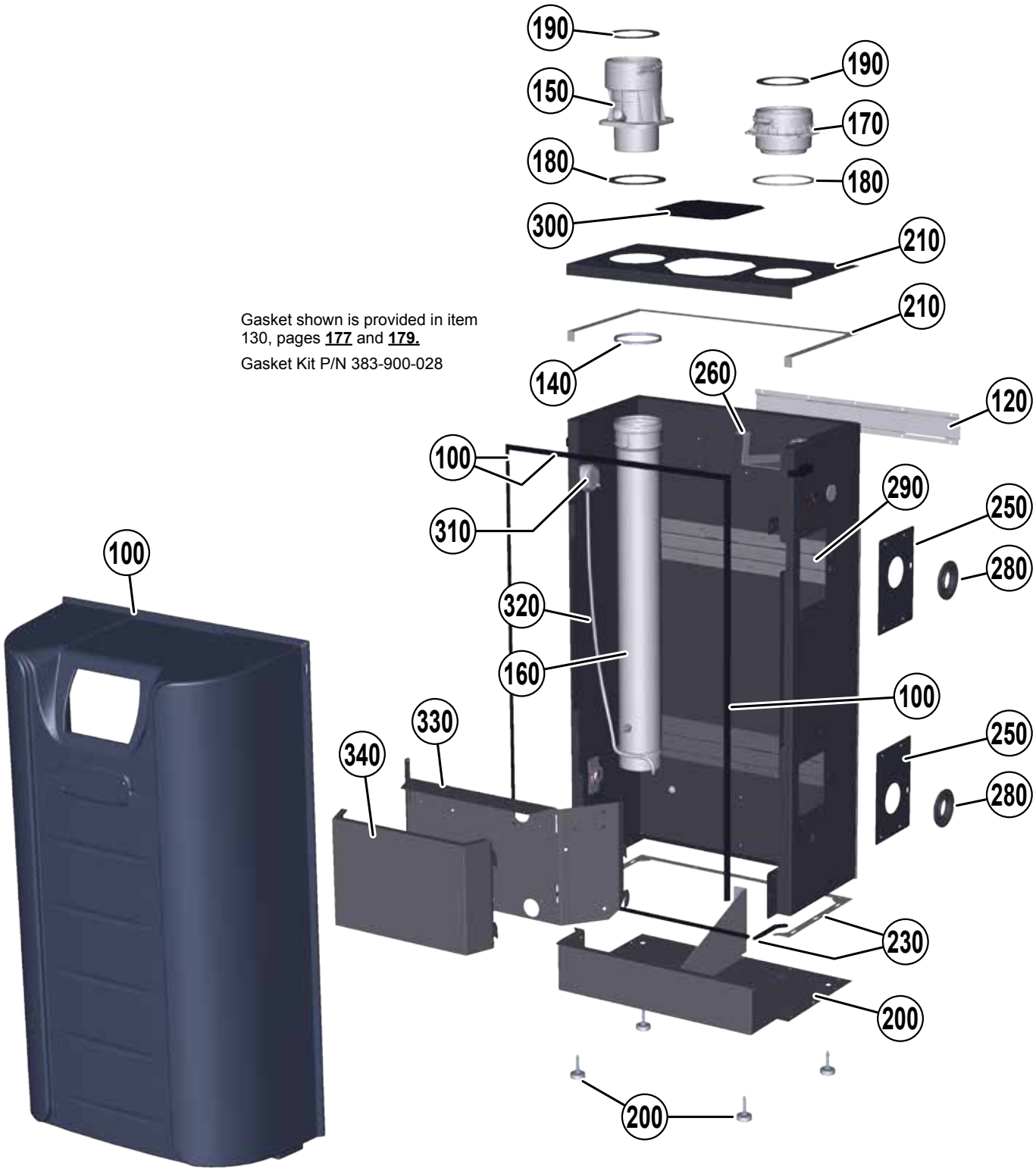

Replacement Parts (continued)

Figure 130 Heat exchanger parts - Evergreen® Pro **110** (see **Figure 131, page 173** for illustration)

Item	Name	Part Number
100	Heat exchanger	383-800-238
110	Heat exchanger, condensate dish, cover plate, burner, igniter, sight glass, refractory, water sensors, gaskets, silicone, and hardware (includes items 100, 120, 130, 140, 160, 170, and 190)	383-800-239
120	Condensate dish, gaskets, and hardware	383-700-102
130	Gasket to seal heat exchanger to condensate dish and seal condensate dish to internal flue pipe	383-700-103
140	Heat exchanger cover plate, refractory, silicone, and gaskets	383-800-240
150	Cover plate gasket (exchanger to gasket) and burner gasket	383-700-342
160	Sight glass kit (bracket, glass, gaskets, and hardware)	383-700-185
170	Igniter kit (igniter, gasket and screws)	383-700-245
180	Burner, gasket, and hardware (includes item 190)	383-700-246
190	Heat exchanger water temperature sensor (one sensor for either boiler inlet or outlet water temperature)	511-724-296

Replacement Parts (continued)

Figure 131 Heat exchanger assembly - Evergreen® Pro **110** (see **Figure 130, page 172** for part numbers)

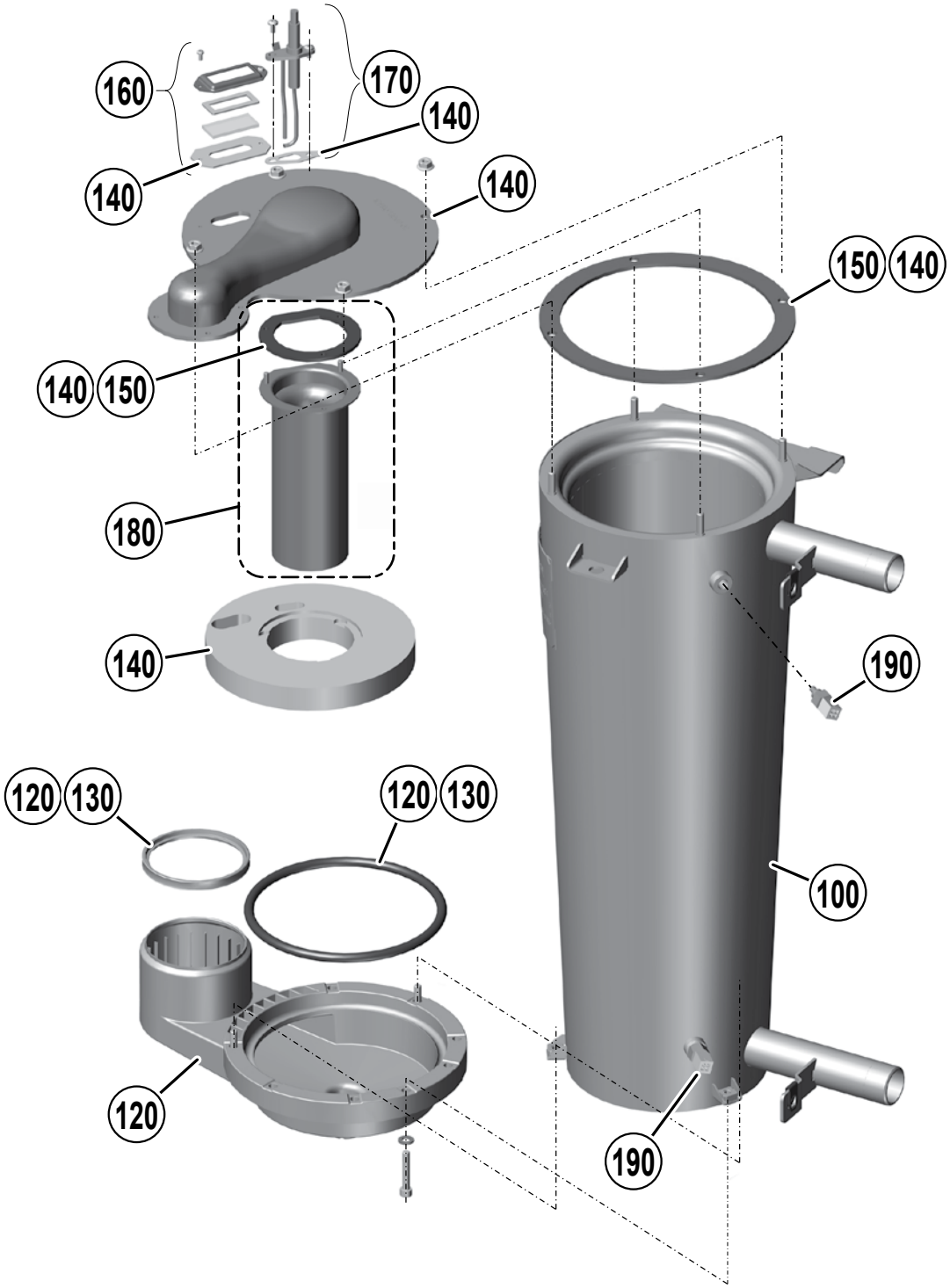

Replacement Parts (continued)

Figure 132 Heat exchanger parts - Evergreen® Pro **155** (see **Figure 133, page 175** for illustration)

Item	Name	Part Number
100	Heat exchanger	383-800-231
110	Heat exchanger, condensate dish, cover plate, burner, igniter, sight glass, refractory, water sensors, gaskets, silicone, and hardware (includes items 100, 120, 130, 140, 150, 160, 170, 180, and 210)	383-800-233
120	Boiler inlet temperature sensor	511-724-296
130	Boiler outlet temperature sensor (same as item 120)	
140	Condensate dish, gaskets, and hardware	383-700-181
150	Gasket to seal heat exchanger to condensate dish	383-700-347
	Gasket to seal condensate dish to internal flue pipe	
160	Heat exchanger cover plate, refractory and gaskets (includes items 170, and 190)	383-700-184
170	Refractory insulation & silicone sealant	383-700-182
180	Burner, gasket, and hardware	383-700-183
190	Burner access cover, gasket and hardware	383-700-202
200	Igniter kit (igniter, gasket and screws)	383-700-187
210	Sight glass kit (bracket, glass, gaskets, and hardware)	383-700-185
220	Heat exchanger cover plate gasket set	383-700-207

Replacement Parts (continued)

Figure 133 Heat exchanger assembly - Evergreen® Pro **155** (see **Figure 132, page 174** for part numbers)

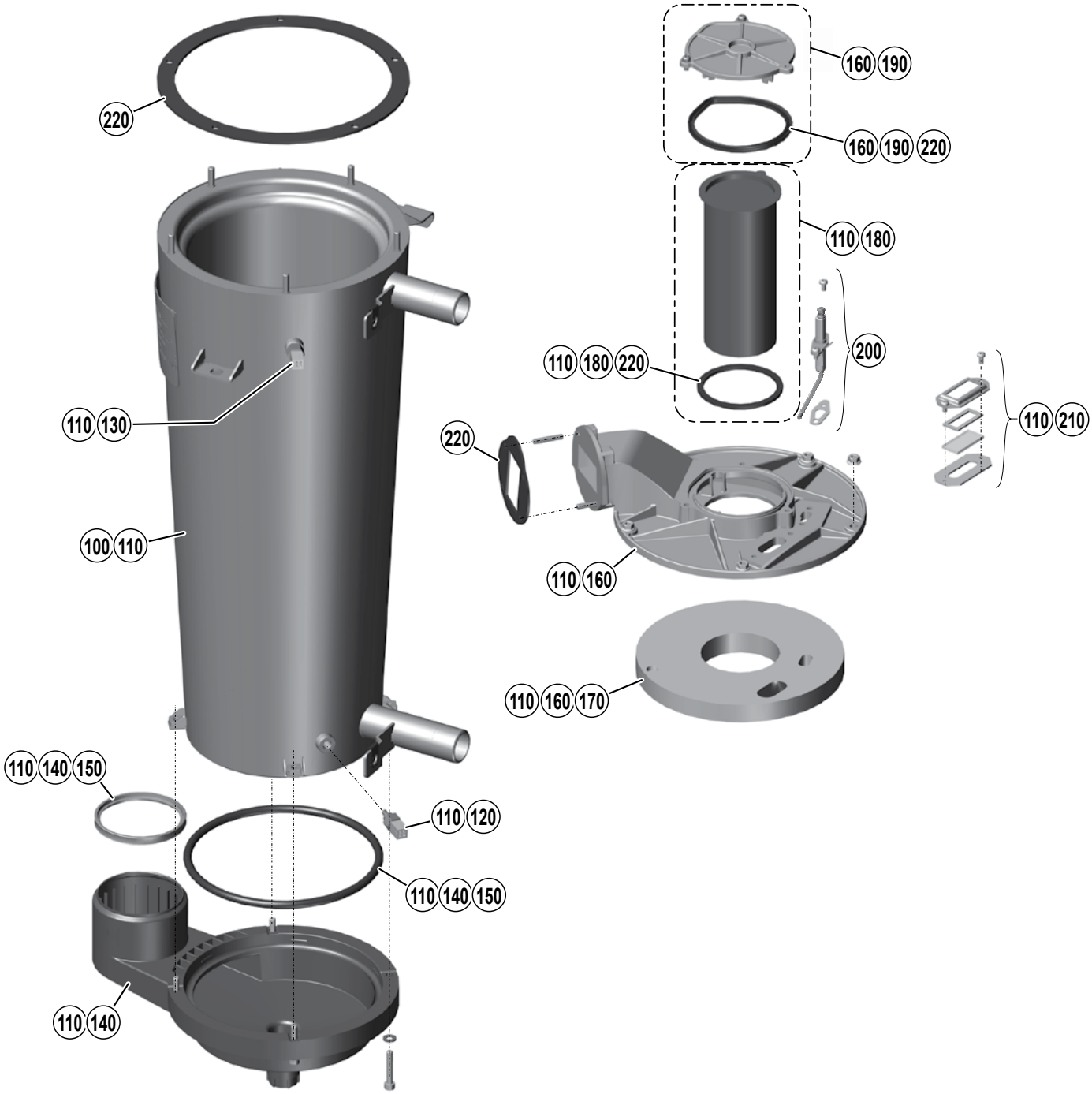

Replacement Parts (continued)

Figure 134 Heat exchanger parts - Evergreen® Pro **220** (see **Figure 135, page 177** for illustration)

Item	Name	Description / contents	Part Number
100	Heat exchanger, gaskets and hardware	(Includes items 130 and 150)	383-900-025
110	Heat exchanger, condensate dish, cover plate, burner, igniter, sight glass, refractory, water sensors, gaskets, silicone, and hardware	(Includes items 120 through 280)	383-900-069
120	Condensate dish, gaskets, and hardware	(Includes item 130)	383-900-012
130	Gasket to seal heat exchanger to condensate dish	(Includes flue pipe gaskets)	383-900-028
150	Refractory insulation & silicone sealant, igniter gasket, flame rod gasket and burner gasket		383-900-032
160	Heat exchanger cover plate, refractory, silicone, gaskets and hardware	(Includes items 150, 190, and 270)	383-900-016
170	Flame sense rod kit	(Includes flame sense rod, gasket and screws)	383-900-094
190	Sight glass kit	(Includes bracket, glass, gaskets, and hardware)	383-900-099
220	Igniter kit	(Includes igniter, gasket and screws)	383-900-033
240	Burner kit	(Includes item 280, burner, gaskets and screws)	383-900-022
260	Heat exchanger water temperature sensor (2 required)	(One sensor for either boiler inlet or outlet water temperature)	511-724-296
270	Burner access cover, seal and hardware	(Includes item 280)	383-900-019
280	Burner access cover seal, burner gasket and hardware		383-900-010

Replacement Parts (continued)

Figure 135 Heat exchanger assembly - Evergreen® Pro **220** (see **Figure 134, page 176** for part numbers)

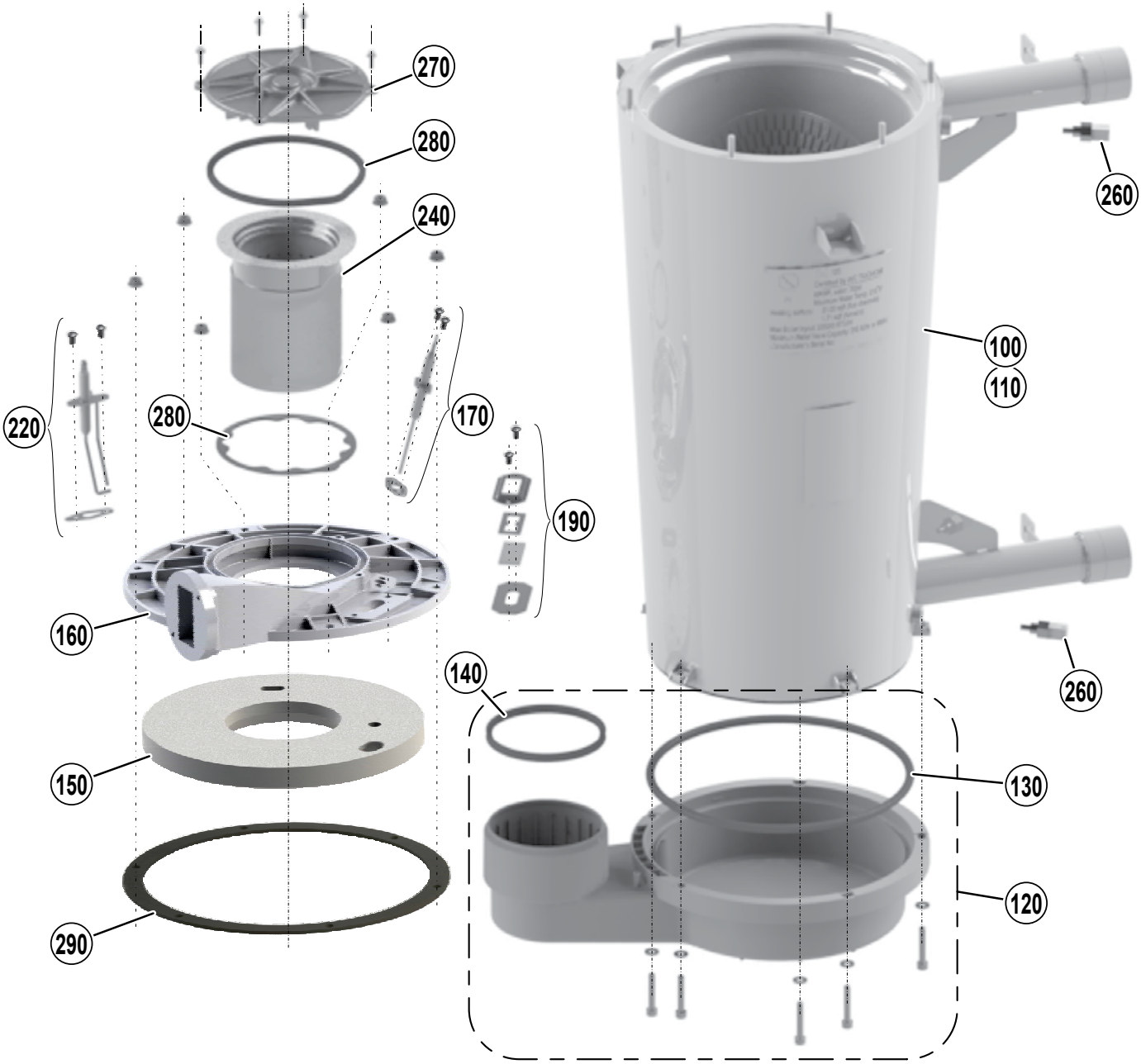

Replacement Parts (continued)

Figure 136 Heat exchanger parts - Evergreen® Pro **299/300/399** (see **Figure 137, page 179** for illustration)

Item	Name	Description / contents	Part Number	Model 299/300	Model 399
100	Heat exchanger, gaskets and hardware	(Includes items 130, and 150)	383-900-024	●	-
			383-900-023	-	●
110	Heat exchanger, condensate dish, cover plate, burner, igniter, sight glass, refractory, water sensors, gaskets, silicone, and hardware	(Includes items 120 through 280)	383-900-068	●	-
			383-900-067	-	●
120	Condensate dish, gaskets, and hardware	(Includes item 130)	383-900-011	●	●
130	Gasket to seal heat exchanger to condensate dish	(Includes flue pipe gaskets)	383-900-030	●	●
150	Refractory insulation & silicone sealant, igniter gasket, flame rod gasket and burner gasket		383-900-031	●	-
			383-900-096	-	●
160	Heat exchanger cover plate, refractory, silicone, gaskets, and hardware	(Includes items 150, 190, and 270)	383-900-017	●	-
			383-900-095	-	●
170	Flame sense rod kit	(Includes flame sense rod, gasket and screws)	383-900-325	●	●
190	Sight glass kit	(Includes bracket, glass, gaskets, and hardware)	383-900-099	●	●
220	Igniter kit	(Includes igniter, gasket and screws)	383-900-033	●	●
240	Burner kit	(Includes item 280, burner, gaskets and screws)	383-900-021	●	-
			383-900-020	-	●
260	Heat exchanger water temperature sensor (2 Required)	(one sensor for either boiler inlet or outlet water temperature)	511-724-296	●	●
270	Burner access cover, gaskets and hardware	(Includes item 280)	383-900-018	●	●
280	Burner access cover seal, burner gasket and hardware		383-900-010	●	●

Replacement Parts (continued)

Figure 137 Heat exchanger assembly - Evergreen® Pro **299/300/399** (see **Figure 136, page 178** for part numbers)

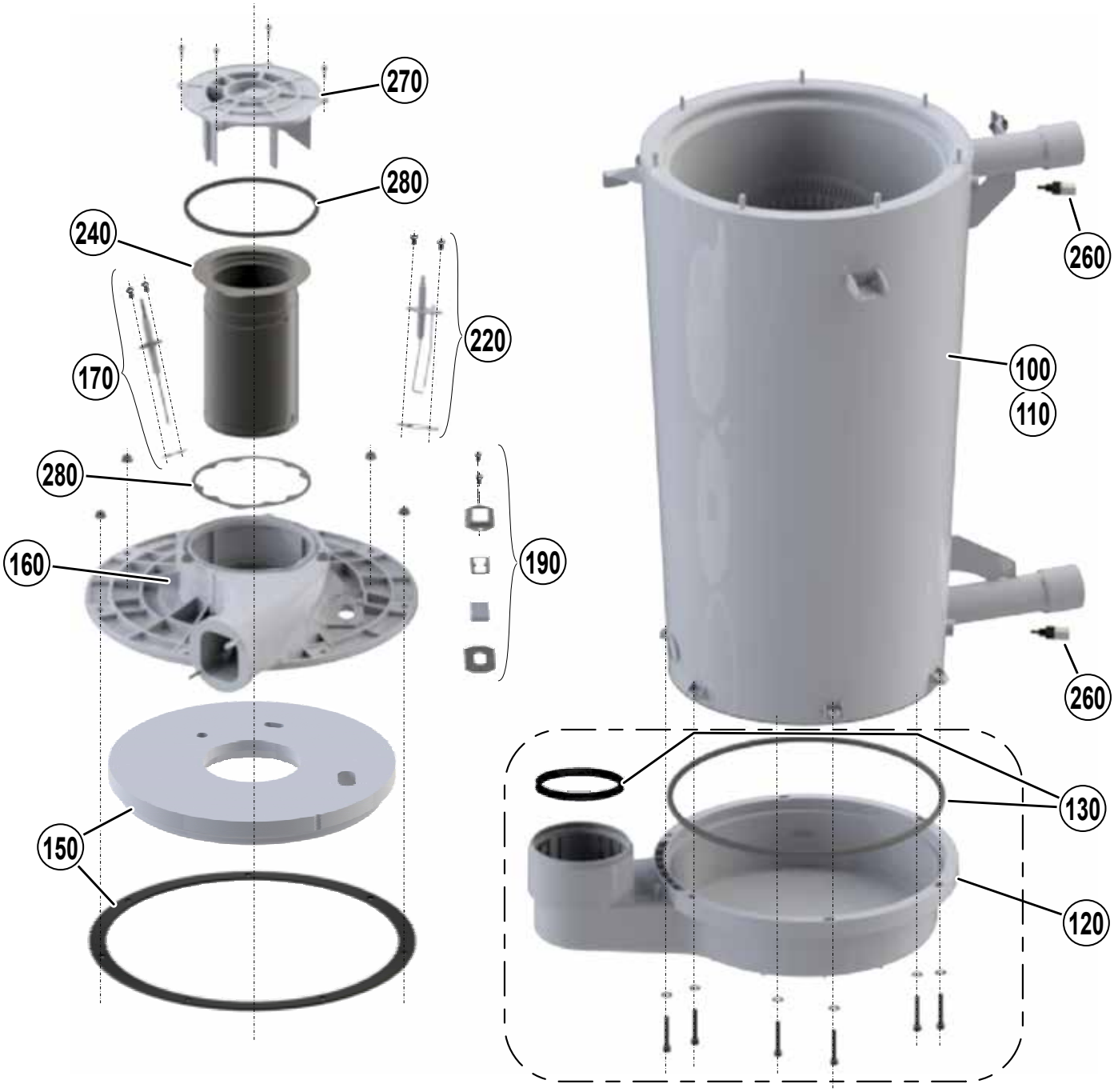

Replacement Parts (continued)

Figure 142 Combustion components - Evergreen® Pro **110** (see **Figure 144, page 181** for illustration)

Item	Name	Description / contents	Part Number
100	Relief valve	30 PSIG relief valve - shipped loose for field installation	383-500-095
110	Pressure & temperature gauge	Shipped loose for field installation	380-000-000
200	Air inlet silencer	Silencer	383-700-248
220	Blower	Blower and gasket	383-700-157
	Blower, venturi & gas valve assembly	Blower, venturi, gas valve and blower gasket	383-700-249
250	Gas valve	Gas valve, rubber boot, and screws	383-700-259
270	Gas valve adapter block	Threaded block, o-ring, and screws	563-910-031
271	Gas flex line adapter	NPT to flare adapter	562-302-576
273	Adapter block O-ring	(10 O-rings) (not shown)	383-600-009
280	Propane orifice - boilers converted to propane ONLY - available only with propane conversion kit - see **Figure 123, page 165** for information		-
290	Gas flex line, mounting bracket, gasket	Gas line, seal, and hardware	383-900-309

Figure 143 Combustion components - Evergreen® Pro **155** (see **Figure 144, page 181** for illustration)

Item	Name	Description / contents	Part Number
100	Relief valve	30 PSIG relief valve - shipped loose for field installation	383-500-095
110	Pressure & temperature gauge	Shipped loose for field installation	380-000-000
270	Gas valve adapter block	Threaded block, o-ring, and screws	563-910-031
271	Gas flex line adapter	NPT to flare adapter	562-302-576
273	Adapter block O-ring	(10 O-rings) (not shown)	383-600-009
300	Air inlet silencer	Silencer with gasket and clip	383-700-203
310	Blower	Blower	383-700-195
320	Gas valve/venturi assembly	Gas valve, venturi, gasket and hardware	383-700-196
330	Propane orifice - boilers converted to propane ONLY - available only with propane conversion kit - see **Figure 123, page 165** for information		-
290	Gas flex line, mounting bracket, gasket	Gas line, seal, and hardware	383-900-309

Replacement Parts (continued)

Figure 144 Combustion components - Evergreen® Pro **110** /**155** (see **Figure 142, page 180** for part numbers)

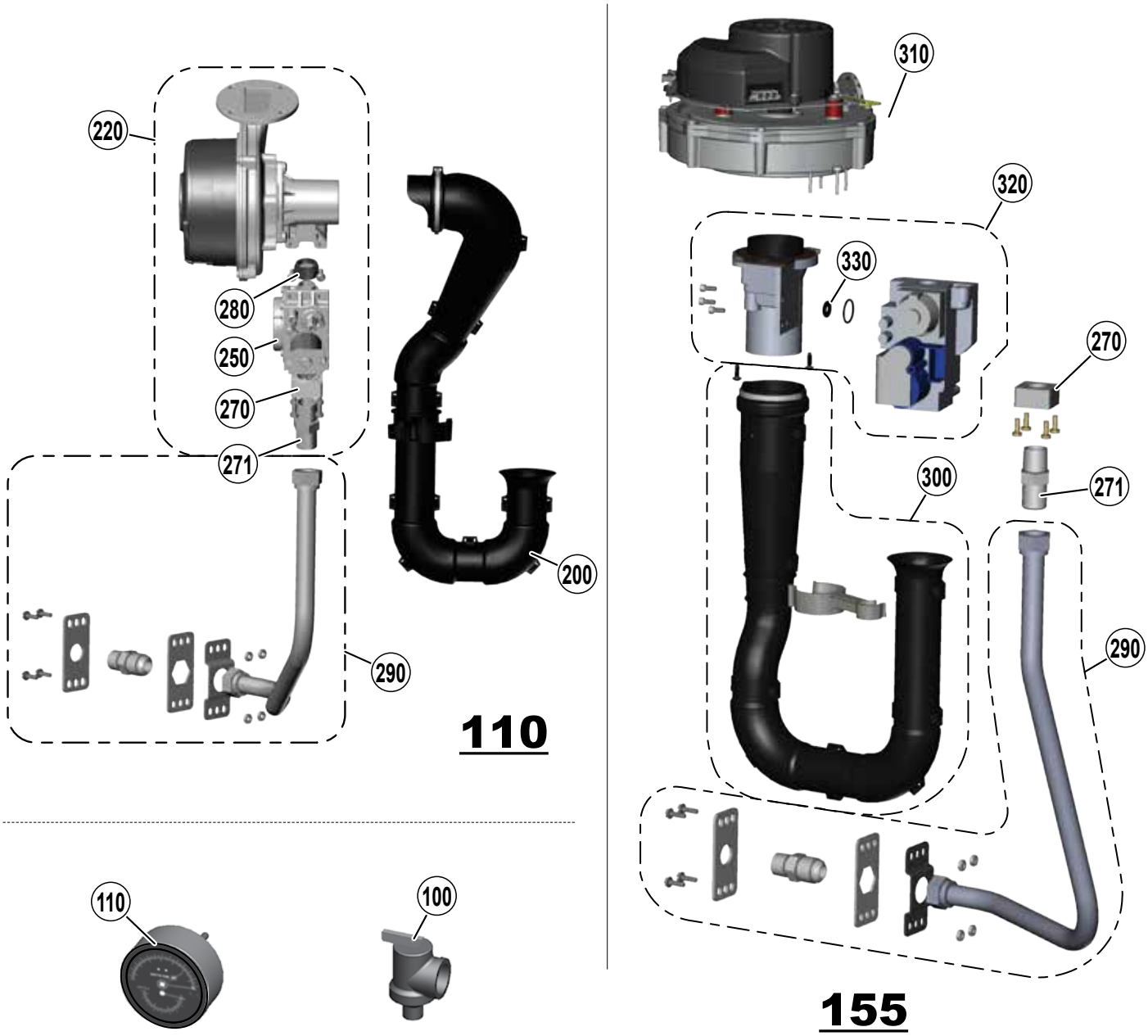

Replacement Parts (continued)

Figure 145 Piping components - Evergreen® Pro **220/299/300/399** (see **Figure 146, page 183** for illustration)

Item	Name	Description / contents	Part Number	Model 220	Model 299/300	Model 399
100	Gas valve	Gas valve, gasket, and o-ring	383-900-027	●	●	-
			383-900-061	-	-	●
120	Venturi	Natural gas (Includes 150 and 240)	383-900-054	●	-	-
			383-900-055	-	●	-
			383-900-056	-	-	●
		Liquefied Petroleum (Propane) Gas (Includes 150 and 240)	383-900-322	●	-	-
			383-900-323	-	●	-
			383-900-324	-	-	●
140	Adapter gas pipe ¾" NPT	Gas pipe adapter between gas valve and venturi	562-302-584	●	●	●
150	Gas pipe gasket	For sealing between adapter and venturi	562-248-765	●	●	●
160	Gas valve adapter block	Threaded block, o-ring and screws (2 required)	383-900-026	●	●	●
170	Gas flex line adapter	Connection between gas valve and gas line	562-302-583	●	●	●
180	Gas flex line, mounting bracket, gasket	Gas line between gas valve and cabinet	383-900-321	●	●	●
200	Blower	Blower, gasket, and hardware	383-900-039	●	●	●
210	Blower gasket	Blower to cover plate seal	383-900-036	●	●	●
220	Inlet air silencer	Silencer with gasket	383-900-034	●	●	-
			383-900-035	-	-	●
230	O-ring -gas valve	(2 required per assembly)	590-318-043	●	●	●
240	O-ring -blower	O-ring between blower and venturi	590-318-102	●	●	●
300	Pressure & temperature gauge	Shipped loose for field installation	380-000-000	●	●	●
310	Relief valve	30 PSIG relief valve - shipped loose for field installation	383-500-095	●	●	-
			383-900-076	-	-	●
320	Condensate drain trap	(not shown)	540-131-075	●	-	-
			540-131-076	-	●	●

Replacement Parts (continued)

Figure 146 Piping components - Evergreen® Pro **220/299/300/399** (see **Figure 145, page 182** for part numbers)

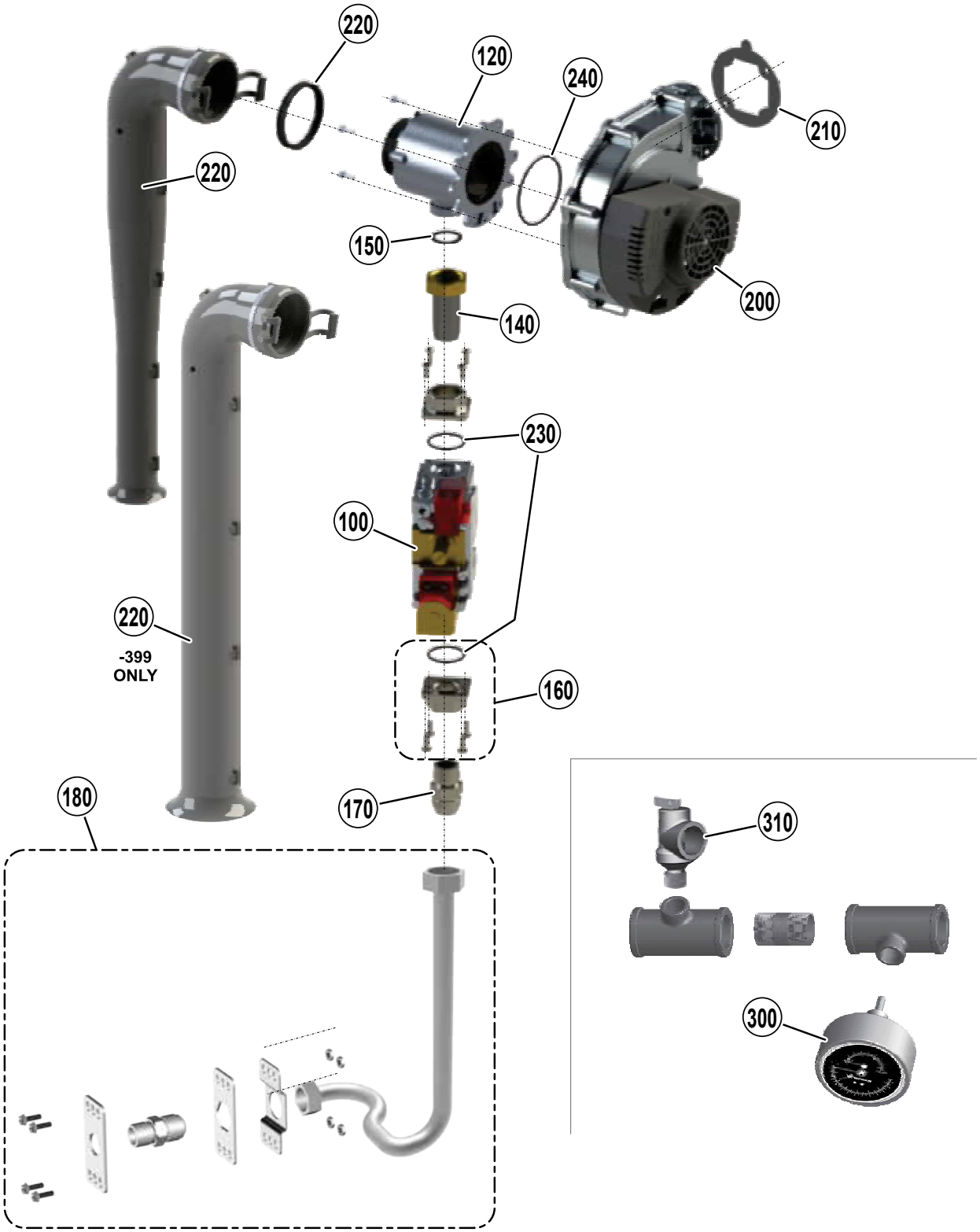

Replacement Parts (continued)

Figure 147 Controls and electrical components - Evergreen® Pro **110/155** (see **Figure 148, page 185** for illustration)

Item	Name	Description / contents	Part Number
100	Flue temperature sensor & grommet	One sensor & grommet	383-500-600
110	Grommet - Flue temperature sensor	One grommet	590-318-011
120	Outdoor temperature sensor	One sensor	510-312-218
130	System temperature sensor	One sensor	383-500-601
140	Low water cut-off		383-900-327
150	Transformer 120V/24V	50 VA transformer	383-500-628
160	Display board assembly	Includes circuit board and plastic housing	383-900-342
170	Control module assembly	Control module and housing	383-900-341
180	Communication board	One board	383-900-110
190	Wire harness - line voltage (not shown)	Wire harness (EVG 110)	383-900-314
		Wire harness (EVG 155)	
200	Wire harness - low voltage (not shown)	Wire harness (EVG 110)	383-900-326
		Wire harness (EVG 155)	383-900-315
210	Wire harness - Low voltage communication board (not shown)	Connects communication board to control module	591-392-004
220	Wire harness - Communication Ethernet (not shown)		591-392-009
230	Ignition cable (not shown)	Ignition cable	383-900-318
240	Fuse 2.5 amp, (qty. 5) fast blow Ato 4 amp, fast blow Fuse 3 amp, (qty. 1) fast blow Ato 4 amp, fast blow Fuse 4 amp, (qty. 1) fast blow Ato 4 amp, fast blow	(Not shown — see **Figure 119, page 154**	383-700-369
260	Jumper for low voltage terminal blocks (not shown)	Five Jumpers	383-500-641
270	Connector electrical control (not shown)	Includes 8 connectors	383-900-111
280	Low voltage sealed wire grommet (not shown)	Seals thermostat wire at entrance to cabinet	562-248-771
290	Communication board terminal block		512-050-248
300	Communication board standoffs	Includes 4 stand offs	383-900-112
310	Circulator Evergreen® Pro 110 Circulator Evergreen® Pro 155	007e 0015e	511-405-153 511-140-155
320	Kit Service Harness Pressure Switch Jumper (110/155 Only) (not shown)		383-900-340

Replacement Parts (continued)

Figure 148 Controls and electrical assemblies - Evergreen® Pro **110/155** (see **Figure 147, page 184** for part numbers)

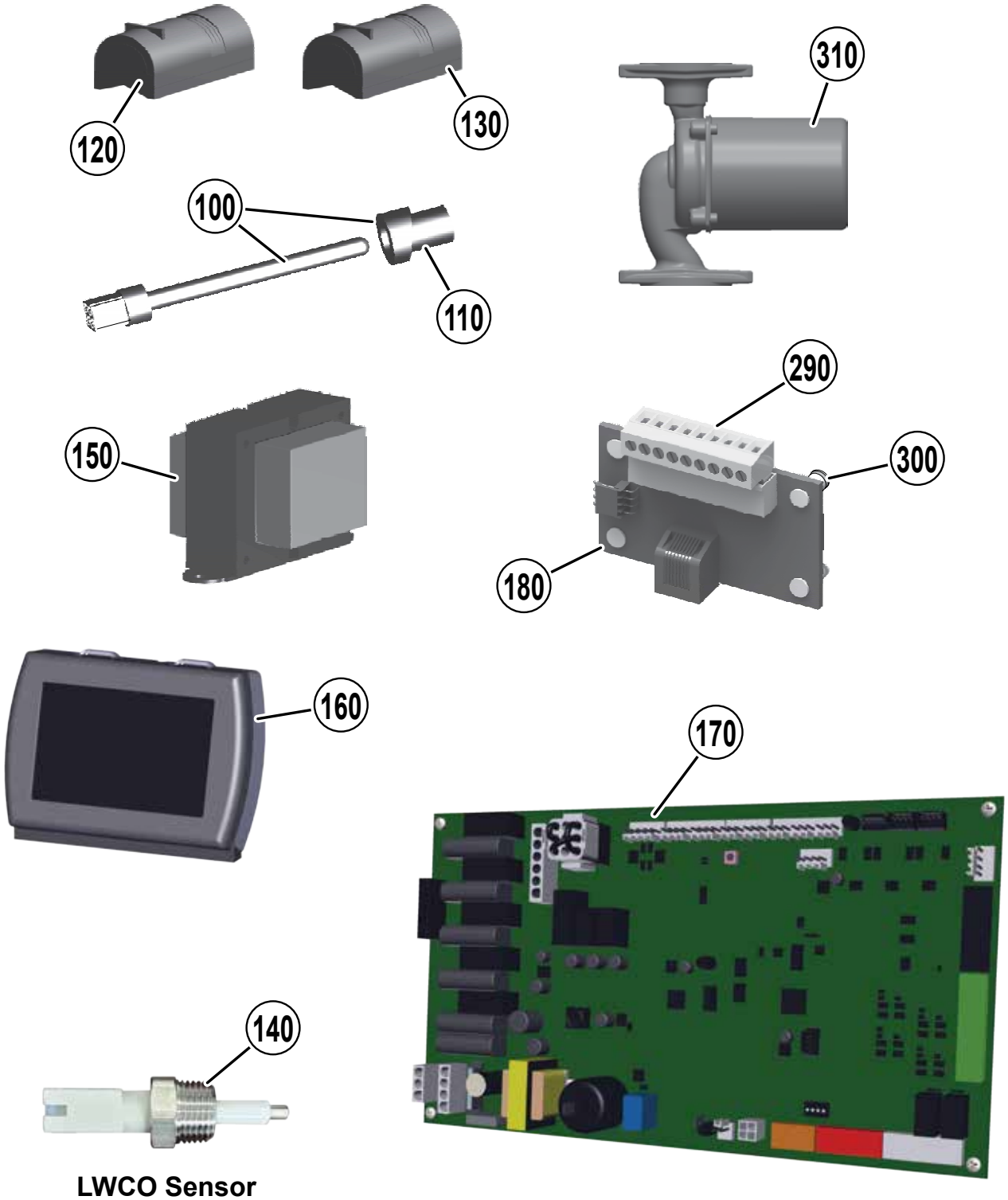

LWCO Sensor (Standard Equipment)

Replacement Parts (continued)

Figure 149 Controls & electrical components - Evergreen® Pro **220/299/300/399** (see **Figure 150, page 187** for illustration)

Item	Name	Description / contents	Part Number
100	Flue temperature sensor	One sensor with gasket	383-500-600
110	Outdoor temperature sensor	One sensor	510-312-218
120	System temperature sensor	(2 required)	383-500-601
130	Low water cutoff	Low water cutoff	383-900-327
140	Transformer 120v/24v	50-60 Hertz transformer	511-802-011
150	Control assembly	Ignition control module	383-900-341
160	On/off power switch	20 Amp rated	511-624-645
170	Communication board	One board	383-900-110
180	Display board assembly	(Includes circuit board, communication cable and plastic housing)	383-900-342
190	Control tray	Plastic electrical enclosure (Includes gaskets and hardware)	383-900-079
200	Cover	(Includes gaskets and hardware)	383-900-029
240	Inspection window plug		591-491-217
250	Fuse 2.5 amp, (qty. 5) fast blow Ato 4 amp, fast blow Fuse 3 amp, (qty. 1) fast blow Ato 4 amp, fast blow Fuse 4 amp, (qty. 1) fast blow Ato 4 amp, fast blow	(Not shown — see **Figure 119, page 154**	383-700-369
280	Wire harness - Line voltage	Wire harness (not shown)	383-900-319
290	Wire harness - Low voltage	Wire harness (not shown)	383-900-320
300	Wire harness - Communication Ethernet	Wire harness (not shown)	591-392-009
310	Wire harness - Low voltage Comm. board	Wire harness (not shown)	591-392-010
320	Terminal block bracket 220-399 Series 2		383-900-330
340	Wire harness - with receptacle and safety cap	Wire harness (not shown)	383-500-638
350	Ignition cable	Ignition cable (not shown)	383-900-318
360	Terminal block kit	Includes 1 high voltage terminal block, low voltage terminal blocks and screwdriver (not shown)	383-900-083
370	Gasket - display support		590-318-107
380	Cover ground terminal kit	(not shown)	383-900-098
390	Gasket - flue temperature sensor		590-318-011
400	Circulator Evergreen® Pro 220/299/300 Circulator Evergreen® Pro 399	Taco Pump 0014 Taco Pump 0013	511-405-133 511-405-140

Replacement Parts (continued)

Figure 150 Controls & electrical assemblies - Evergreen® Pro **220/299/300/399** (see **Figure 149, page 186** for part numbers)

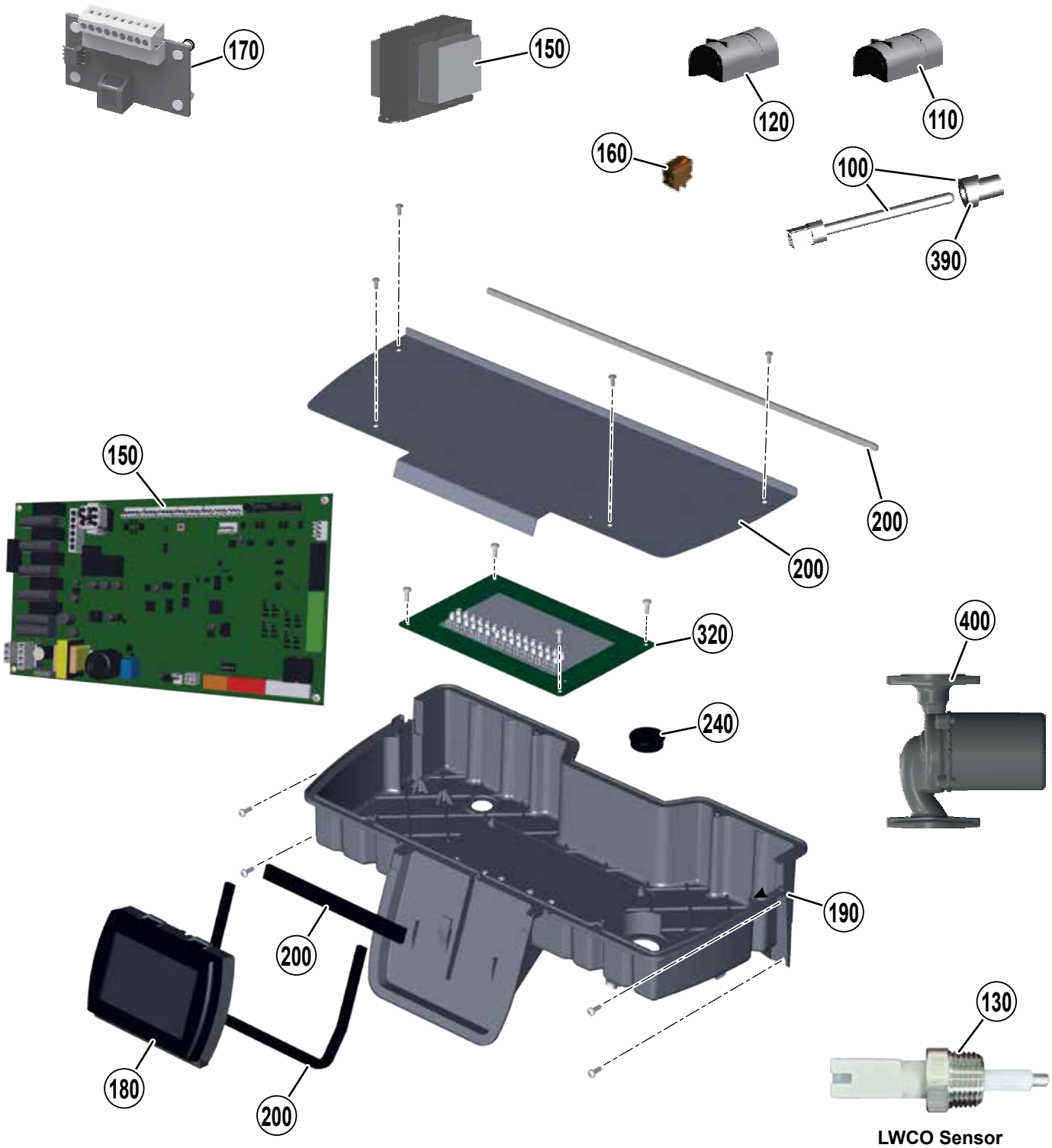

LWCO Sensor (Standard Equipment)

This page intentionally left blank.

Section 8
Service Information

This page intentionally left blank.

Dimensions

Figure 151 Dimensional data - Evergreen® Pro **110/155** (all dimensions in inches)

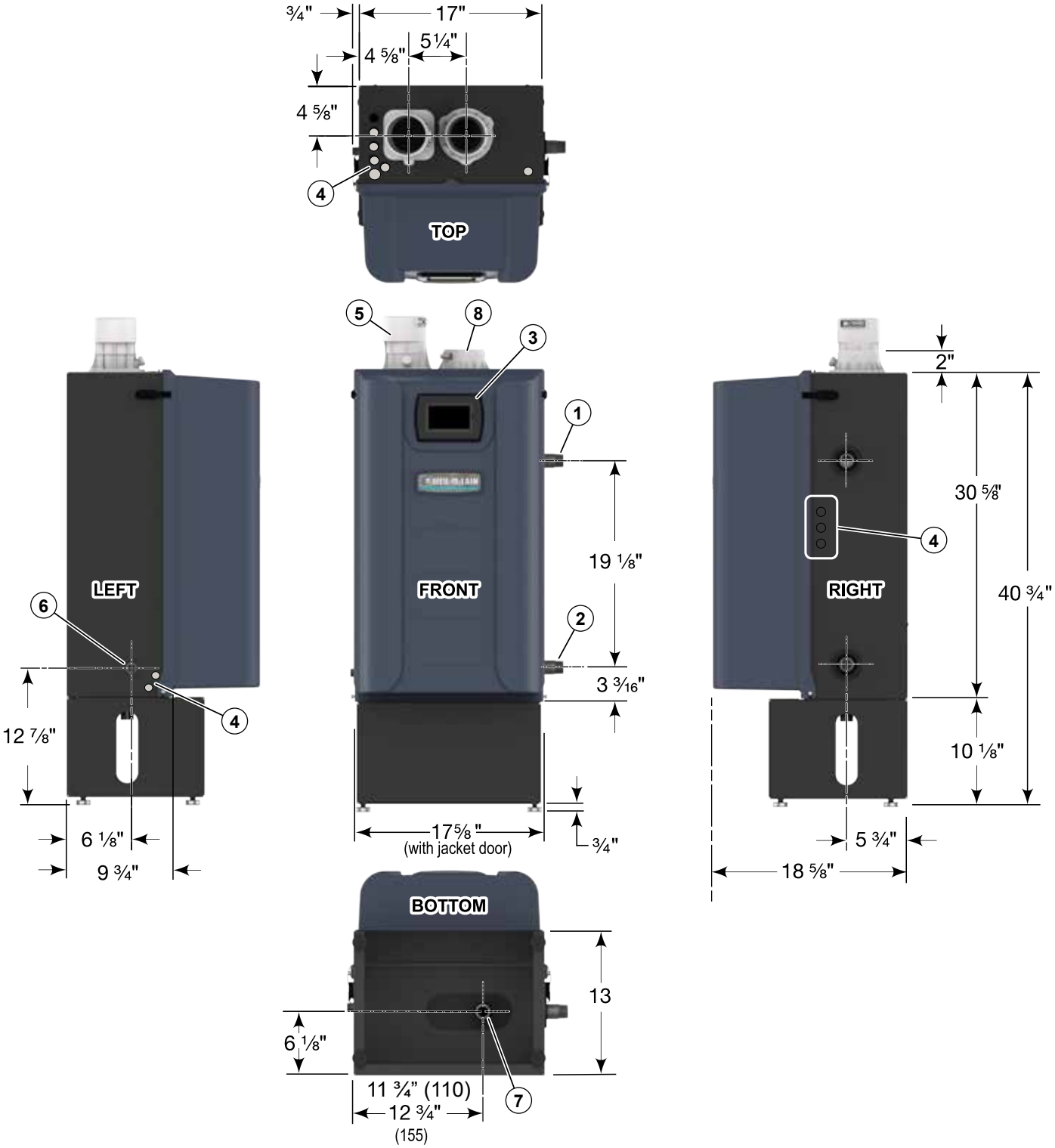

1. Boiler supply tapping - 1" NPT -110, 1-1/4" NPT -155
2. Boiler return tapping - 1" NPT -110, 1-1/4" NPT -155
3. Display
4. Electrical entrance openings
5. Vent connection: 3" PVC, 3" PP (Duravent & Centrotherm), 3" SS (Duravent)
6. Gas connection
7. Condensate trap nozzle
8. Air connection: 3" PVC

Dimensions (continued)

Figure 152 Dimensional data - Evergreen® Pro **220/299/300/399** (all dimensions in inches)

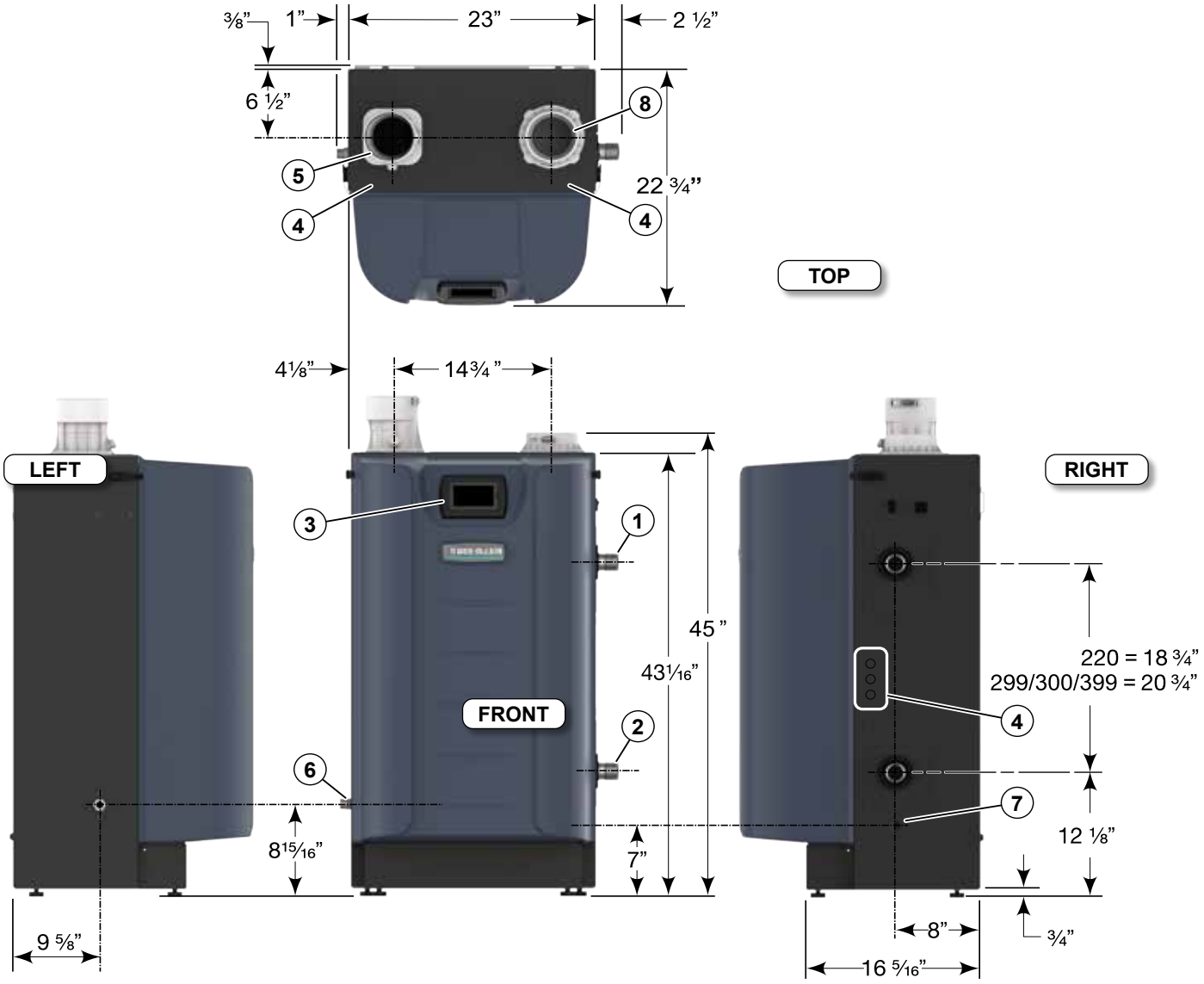

1. Boiler supply tapping - 1½" NPT.
2. Boiler return tapping - 1½" NPT.
3. Display
4. Electrical entrance openings.
5. Vent connection: 4" PVC, 4" PP (Duravent), 4" SS (Duravent).
6. Gas connection – ¾" NPT (manual gas valve shipped loose for field installation) See page 51 for details and instructions.
7. Condensate drain connection.
8. Air connection: 4" PVC.

Ratings - Evergreen® Pro Boilers

Figure 153 Ratings and engineering data - Evergreen® Pro 110/155/220/299

Boiler Model EVG	CSA Input	AHRI Certified Ratings: Heating Capacity	AHRI Certified Ratings: Seasonal Efficiency	Net Water Rating	Boiler Water Content	Vent/ *Comb. Air Connection Diameter	% Input derate vs vent length (Values shown are at MAX vent/air pipe length - See Note 6) Direct Vent Venting ONLY (Direct Exhaust with kit only): Natural gas		Propane	
	Btuh (Note 5)	Btuh (Note 2)	AFUE, % (Note 1)	Btuh (Note 3)	Gallons	Inches (Note 4)	3" Vent/air piping	4" Vent/air piping	3" Vent/air piping	4" Vent/air piping
110	110,000	101,000	95.0	88	2.54	3" PVC/PP/SS	5 %	N/A	5 %	N/A
155	155,000	143,000	95.1	124	3.22	3" PVC/PP/SS	5 %	N/A	5 %	N/A
EVG 220	220,000	206	95.0	179	4.6	4" PVC/PP/SS	7.2%	2.1%	7.2%	2.1%
EVG 299	299,000	280	95.0	243	7.0	4" PVC/PP/SS	N/A	2.7%	N/A	2.7%

*Air connection is 3" PVC only

Figure 154 Ratings and engineering data - Evergreen® Pro/300/399

Boiler Model EVG	CSA Input	Gross Output	Net Water Rating	Combustion Efficiency	AHRI Certified Ratings: Thermal Efficiency	Boiler Water Content	Vent/ *Comb. Air Connection Diameter	% Input derate vs vent length (Values shown are at MAX vent/air pipe length - See Note 6) Direct Vent Venting ONLY *Air connection is 4" PVC only: Natural gas	Propane
	Btuh (Note 5)	MBH (Note 5)	MBH (Note 3)	% (Note 5)	% (Note 5)	Gallons	Inches (Note 4	4" Vent/air piping	4" Vent/air piping
EVG 300	300,000	287	250	96.0	95.5	7.0	4" PVC/PP/SS	2.7%	2.7%
EVG 399	399,000	383	333	96.5	96.0	6.7	4" PVC/PP/SS	4.3%	4.3%

Ratings - Evergreen® Pro Boilers (continued)

Notes

1. As an Energy Star Partner, Weil-McLain has determined that Evergreen® Pro 110, 155, 220 & 299 boilers meet the Energy Star guidelines for energy efficiency.

   NOTE: Adjusting boiler firing rate will affect AFUE rating.

2. Based on standard test procedures prescribed by the United States Department of Energy. Ratings also referred to as CSA Output. NOTE that only DOE Heating Capacity and AFUE are certified by AHRI. AFUE is also know as Annual Fuel Utilization Efficiency or Seasonal Efficiency.

3. Net AHRI ratings are based on net installed radiation of sufficient quantity for the requirements of the building and nothing need be added for normal piping and pickup. Ratings are based on a piping and pickup allowance of 1.15. An additional allowance should be made for unusual piping and pickup loads.

4. Evergreen® Pro boilers must be direct-vented. Evergreen® Pro boilers require special venting, consistent with Category IV boiler. se only the vent materials and methods specified in this manual. Evergreen® Pro boilers may be direct exhaust vented.

   All vent and air pipe elbows must be sweep elbows, NOT short-radius elbows.

5. Ratings shown are for sea level applications only. For altitudes from sea level to 2000 feet above sea level, the Evergreen® Pro boiler requires no modifications. The boiler automatically derates itself by approximately 4% per 1000 feet above sea level.

6. All of the boilers will automatically de-rate as vent/air pipe length increases, due to the pressure loss through the piping. For vent/air pipe lengths less than the maximum, the derate equals the value above (% Input derate vs. vent length) times vent length ÷ 100.

THE OUTDOOR SENSOR SUPPLIED WITH THE BOILER MUST BE INSTALLED UNLESS EXEMPTED BELOW:

IMPORTANT

In accordance with **Section 303 of the 2007 Energy Act**, this boiler is equipped with a feature that saves energy by reducing the boiler water temperature as the heating load decreases. This feature is equipped with an override which is provided primarily to permit the use of an external energy management system that serves the same function.

THIS OVERRIDE MUST NOT BE USED UNLESS AT LEAST ONE OF THE FOLLOWING CONDITIONS IS TRUE:

- An external energy management system is installed that reduces the boiler water temperature as the heating load decreases.
- This boiler is not used for any space heating.
- This boiler is part of a modular or multiple boiler system having a total input of 300,000 BTU/hr or greater.
- This boiler is equipped with a tankless coil (not applicable to Evergreen® Pro).

Ratings - Multiple Evergreen® Pro Boilers

Figure 155 Ratings and engineering data - multiple Evergreen® Pro boilers

Boilers in system Model EVG		Total Input	Output / Heating capacity	Boiler H.P.	Net water ratings	Manifolded combustion air duct size
		Input, MBH	Output, MBH	-	MBH	Square inches
110	155	-	Note 1	-	Note 2	
2		220	202	6.0	176	110
	2	310	286	8.5	248	155
3		330	303	9.1	264	165
	3	465	429	12.8	372	233
4		440	404	12.1	352	220
	4	620	572	17.1	496	310
5		550	505	15.1	440	275
	5	775	715	21.4	620	388
6		660	606	18.1	528	330
	6	930	858	25.6	744	465
7		770	707	21.1	616	385
	7	1085	1001	29.9	868	543
8		880	808	24.1	704	440
	8	1240	1144	34.2	992	620

Boiler Model EVG	Shipping weight	Operating weight	Water content	Water flow rate per boiler		Vent/air pipe size: (Provide a separate vent for each boiler)	Electrical service required
	Pounds per boiler	Pounds per boiler	Gallons per boiler	GPM @ 20°F rise	GPM @ 40°F rise		Amps per boiler
		Note 4				Note 5	Note 3
110	120	107	2.54	10.0	5.0	3"	<12.0
155	142	129	3.22	14.3	7.2	3"	<12.0

Notes	
1	Based on standard test procedures outlined by DOE for individual boilers.
2	Net AHRI ratings are based on piping and pickup allowance of 1.15. Consult Weil-McLain Technical Services for other allowances.
3	Total amp requirement includes up to five circulators, not exceeding 2.0 amps for circ/ outputs 1-4; 2.2 amp for Boiler Circ (Circ 5).
4	Operating weight is the total weight of the boiler, including water.
5	EVG 110 and 155 vent/air pipes must be 3". All of the boilers will automatically de-rate as vent/air pipe length increases, due to the pressure loss through the piping. See Figure 118, page 133 for details. All EVG installations require a separate vent pipe and termination for each boiler. Vent piping cannot be manifolded. Install and terminate vents as described in vent/air installation instructions in this manual. Combustion air piping can be individually piped or manifolded. See the Advanced Manual for manifolded air piping.

Ratings - Multiple Evergreen® Pro Boilers (continued)

Figure 156 Ratings and engineering data - multiple Evergreen® Pro boilers

Boilers in system			Total CSA input	CSA Output /DOE Heating capacity	Boiler H.P.	Net water ratings	Manifolded combustion air duct size
			Input, MBH	Output, MBH	-	MBH	Square inches
EVG 220	EVG 299/300	EVG 399	-	Note 1	-	Note 2	
2			440	412	12.3	358	220
	2		598	560	16.7	486	300
		2	798	766	22.9	666	400
3			660	618	18.5	537	330
	3		897	840	25.1	729	450
		3	1197	1149	34.4	999	600
4			880	824	24.6	716	440
	4		1196	1120	33.5	972	600
		4	1596	1532	45.8	1332	800
5			1100	1030	30.8	895	550
	5		1495	1400	41.9	1215	750
		5	1995	1915	57.3	1665	1000
6			1320	1236	36.9	1074	660
	6		1794	1680	50.2	1458	900
		6	2394	2298	68.7	1998	1200
7			1540	1442	43.1	1253	770
	7		2093	1960	58.6	1701	1050
		7	2793	2681	80.2	2331	1400
8			1760	1648	49.2	1432	880
	8		2392	2240	67.0	1944	1200
		8	3192	3064	91.6	2664	1600

Boiler Model	Shipping weight	Operating weight	Water content	Water flow rate per boiler		Vent/air pipe size: (Provide a separate vent for each boiler)	Electrical service required
	Pounds per boiler	Pounds per boiler	Gallons per boiler	GPM @ 20°F rise	GPM @ 40°F rise		Amps per boiler
		Note 4				Note 5	Note 3
EVG 220	215	190	4.6	22	11	3" or 4"	16.0
EVG 299/300	260	255	7.0	30	15	4"	16.0
EVG 399	260	255	6.7	40	20	4"	16.0

Notes

1	Based on standard test procedures outlined by DOE for individual boilers.
2	Net water ratings are based on piping and pickup allowance of 1.15. Consult Weil-McLain Technical Services for other allowances.
3	Total amp requirement includes up to five circulators, not exceeding 2.0 amps for circ/outputs 1-4; 2.2 amp for Boiler Circ (Circ 5).
4	Operating weight is the total weight of the boiler, including water.
5	Evergreen® Pro 220 vent/air pipes can be either 3" or 4" pipe. Evergreen® Pro 299/300/399 vent/air pipes must be 4". All of the boilers will automatically de-rate as vent/air pipe length increases, due to the pressure loss through the piping. See Figure 123, page 129 for details. All Evergreen® Pro installations require a separate vent pipe and termination for each boiler. Vent piping cannot be manifolded. Install and terminate vents as described in vent/air installation instructions in this manual. Combustion air piping can be individually piped or manifolded. See Advanced Manual for manifolded air piping.

Installation and Service Certificate

Boiler Data		
Boiler Model / Series Evergreen® Pro _____ / Series _____		Date installed _____
Consumer Protection (CP) Number _____	FUEL: Natural _____ Propane Gas (LP) _____	Btu Input _____

CERTIFIED THAT:

- ❑ Installation instructions have been followed.
- ❑ Check-out sequence has been performed.
- ❑ Information on next two pages is certified to be correct.
- ❑ Information received and left with owner/maintenance person.

Installer _____ _____

_____ _____
(Company) (Address)

_____ _____
(Phone) (Installer's Signature)

Read Configuration Settings

Bluetooth Connection

To access configuration settings, connect to Bluetooth.

1. Swipe right on the display to navigate to the Menu screen.
2. Press the <BLUETOOTH> button. See **Figure 157**.
3. Toggle the Bluetooth ON by pressing the blue toggle button. See **Figure 157**. Bluetooth will remain on for 30 minutes of inactivity.
4. Turn on the Bluetooth of your smartphone device.

Saving the Boiler Configuration

Connecting to the WM ProTools™ app allows the boiler configuration to be loaded, saved, and viewed. To download the app, point the smartphone camera at the QR code in **Figure 159**, then click the link on the screen.

1. Open the WM ProTools app. See **Figure 159**
2. Press the <Connect> button.
3. Press <Connect to Boiler>.
4. Press the WM boiler to connect to on the screen.

IMPORTANT

If no boilers appear in the list, toggle the Bluetooth radio of the boiler off then on again. Wait for the Bluetooth screen of the display to connect via the app before navigating away from this screen.

5. Swipe down to view the connectivity options. Choose the <READ/WRITE Configuration> button.
6. Press <READ Configuration>. It takes several seconds to gather all configuration information of the boiler.
7. Review the information, then press <Save Configuration> at the bottom of the screen.
8. Choose a descriptive name for the saved configuration, then press the <Save> button.

IMPORTANT

Files are saved locally on the phone. If the app is uninstalled, all files are lost. Save the information for your records.

9. To view any saved files, at step 6 above press <WRITE Configuration> instead.
   a. Choosing WRITE Configuration will bring up a list of configurations saved on your device.
   b. Pressing any of the bubbles will open that file.

IMPORTANT

DO NOT WRITE a file unless certain the configuration is correct for your application.

Figure 157 Menu screen

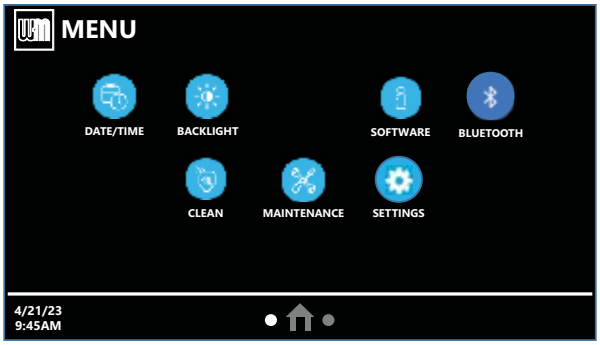

Figure 158 Toggle the Bluetooth connection

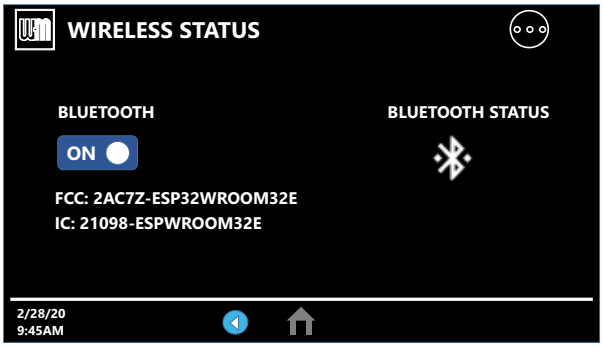

Figure 159 WM ProTools app download

PROTOOLS™

10. Write Configuration is possible with the app. The Model number and Master/Shadow/Single settings must match the boiler for a successful Write Configuration to occur.

Figure 160 WM ProTools app navigation

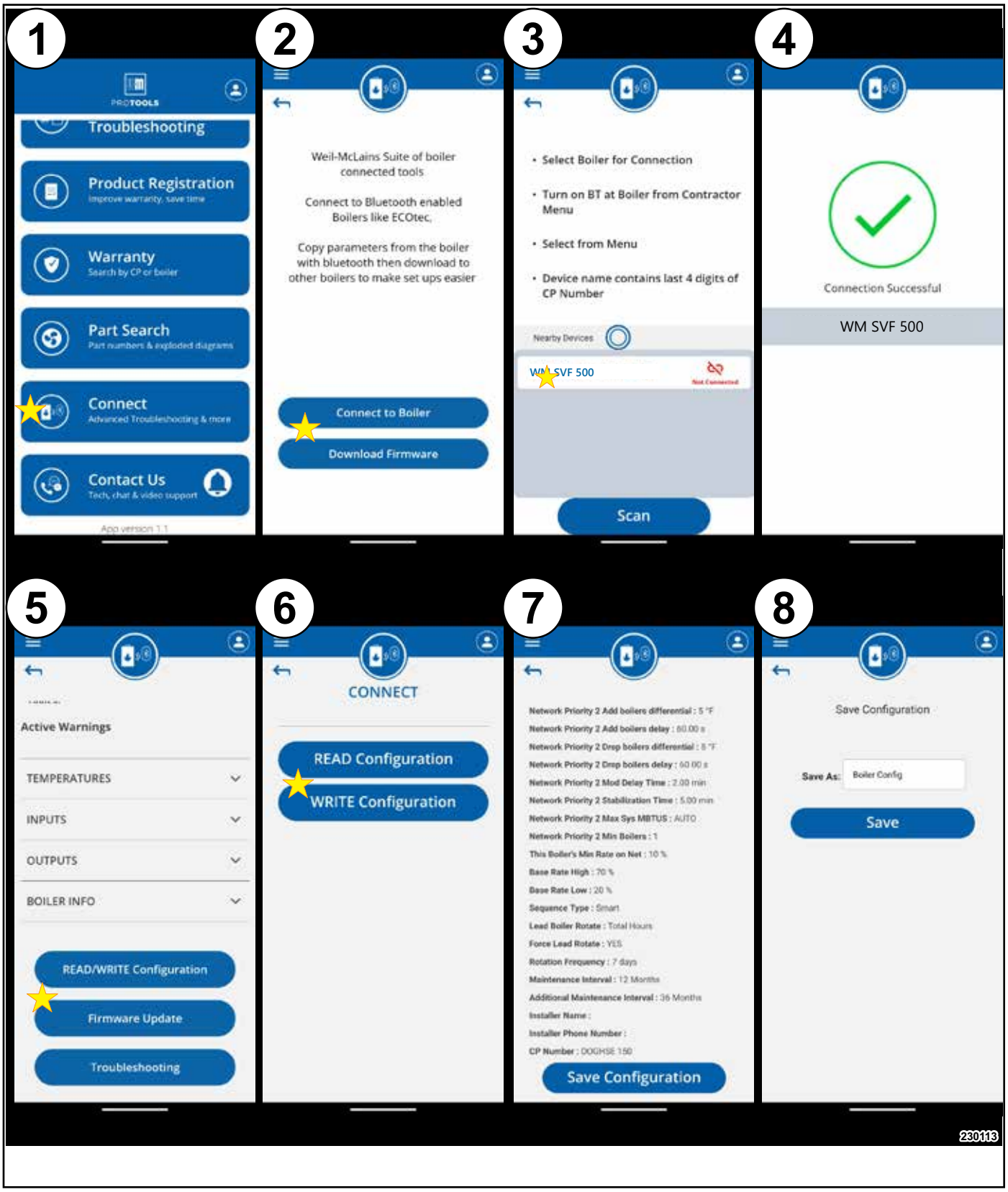

Maintenance Log

Date	High fire / Low Fire	O_2	CO	CO_2	Stack Temp	pH	Action	Technician

WEIL-McLAIN®

WM Technologies, LLC
500 Blaine Street
Michigan City, IN 46360-2388
weil-mclain.com