WEIL-McLAIN®

ECO® Tec

Series 2
80/110/150/199
Wall Mount Gas - Fired
Condensing Boilers – Combi and Heating Only Models

Advanced Manual

Multiple Boiler Installation & Settings + Single Boiler Advanced Settings

WARNING This manual must only be used by a qualified heating installer/service technician. Read all instructions, including this manual and all other information shipped with the boiler, before installing. Perform steps in the order given. Failure to comply could result in severe personal injury, death or substantial property damage.

Part number 550-100-272/1023

Contents

ECO Tec Control — Overview 3

Combi Models — For DHW piping 6

Multiple boiler installations 7

EXPRESS Setup — Requirements by Boiler 9

EXPRESS Setup — Steps 10

EXPRESS Setup — The WIZARD 11

EXPRESS Setup — Typical Application A 17

EXPRESS Setup — Typical Application B 21

EXPRESS Setup — Typical Application C 26

EXPRESS Setup — Typical Application D 30

Field wiring (see wiring diagram,) 33

Wiring diagram — schematic 44

Wiring diagram — ladder 46

Zoning with the ECO Tec Control 48

Control operation 50

Control settings menus 51

HOMEOWNER NAVIGATION menus 56

BLUETOOTH 57

CONTRACTOR menus 58

BOILER SETTINGS menu 59

NETWORK SETTINGS menu 60

ROTATION AND SEQUENCE 61

System Settings 64

Network Boiler PRIORITY menu 65

NETWORK INPUTS menu 71

SERVICE menus 72

WARNING Follow all instructions for installation, start-up and servicing in the **ECO Tec** boiler manual.

Use this **Advanced Manual** for multiple boiler installation guidelines and control settings and for single boiler advanced control settings.

HAZARD DEFINITIONS

The following defined terms are used throughout this manual to bring attention to the presence of hazards of various risk levels or to important information concerning the life of the product.

DANGER Indicates presence of hazards that will cause severe personal injury, death or substantial property damage.

WARNING Indicates presence of hazards that can cause severe personal injury, death or substantial property damage.

CAUTION Indicates presence of hazards that will or can cause minor personal injury or property damage.

NOTICE Indicates special instructions on installation, operation or maintenance that are important but not related to personal injury or property damage.

IMPORTANT

THE OUTDOOR SENSOR SUPPLIED WITH THE BOILER MUST BE INSTALLED UNLESS EXEMPTED BELOW:

In accordance with **Section 303 of the 2007 Energy Act**, this boiler is equipped with a feature that saves energy by reducing the boiler water temperature as the heating load decreases. This feature is equipped with an override which is provided primarily to permit the use of an external energy management system that serves the same function.

THIS OVERRIDE MUST NOT BE USED UNLESS AT LEAST ONE OF THE FOLLOWING CONDITIONS IS TRUE:

- An external energy management system is installed that reduces the boiler water temperature as the heating load decreases.
- This boiler is not used for any space heating.
- This boiler is part of a modular or multiple boiler system having a total input of 300,000 BTU/hr or greater.
- This boiler is equipped with a tankless coil (not applicable to **ECO Tec**).

NOTICE If the outdoor sensor is **not used**, the following changes must be made to control settings during control setup:

TARGET ADJUST (in priority menus) must be set either to NONE (constant supply temperature) or 0–10VDC (remote target).

WWSD must be set to OFF.

FCC: Wireless device unique identifier registered with the U.S. Federal Communications Commission.

IC: Wireless certification approval number unique to all devices, required for Canada.

Assembled From tested components Complete system not tested

- This device complies with Part 15 of the FCC Rules. Operation is subject to the following two conditions: (1) this device may not cause harmful interference, and (2) this device must accept any interference received, including interference that may cause undesired operation.

ECO Tec Control — Overview

ECO Tec control overview

- Control inputs and outputs allow operation of multiple heating circuits (space heating and DHW, for example).
- Up to three priority levels can be set, providing automatic switch-over on demand.
- This manual provides quick set-up information for boiler installations.

ECO Tec control operation

- The control responds to signals from the room thermostats, DHW aquastats (if used), boiler sensors (Boiler Out, Boiler In, flue temperature), outdoor temperature and system sensors, if used. Combi models will also respond to signals from DHW flow sensor and DHW temperature sensor.
- The control automatically adjusts blower speed to match boiler output to space heating and/or DHW heating demand.
- The default control settings provides up to four (4) space heating zones. The control can be easily set up for operation with a DHW zone, with or without domestic priority.

ECO Tec control *WIZARD*

- The Wizard leads through a step-by-step setup procedure designed for the application chosen.
- Context-sensitive help is available to explain the purpose of key setup Items.

ECO Tec control setup

1. Set control parameters using the WIZARD option provided on initial start-up or manually enter parameters using control menus (see Figure 26, page 56 and following pages for information.)
2. See **Express setup** instructions beginning on page 10 for basic systems and minimum settings required.

⚠WARNING

Boiler Model, Altitude and Fuel Type are critical settings. Failure to set correctly could result in severe personal injury, death or substantial property damage.

Temperature settings — You must ensure that the control is set for the proper water temperatures for the system. Excessive water temperature can cause significant property damage in some applications.

Multi-temperature systems — If the heating system includes circuits that require lower temperature water (radiant slab circuits, for example) as well as higher temperature circuits (DHW, finned tube baseboard, etc.), it is recommended to protect low-temperature circuits with limit controls that are wired to an control external limit circuit. Failure to provide regulation can result in substantial property damage.

Control Features

- ❑ Advanced interface and troubleshooting via **Bluetooth**® communication.
- ❑ Color touch-screen display for ease of operation monitoring and troubleshooting.
- ❑ Easy configuration with WIZARD step-by-step setup including on-screen help.
- ❑ The **ECO Tec** control can communicate to existing Unity™ controls in a multi-boiler network.
- ❑ Three (3) programmable priority assignments for up to four (4) heat inputs.
- ❑ Preset operating parameters for typical heating systems, including target temperatures, reset curves and circulator assignments.
- ❑ Integral outdoor reset option, with reset curves matched to the system type selected.
- ❑ ModBus communications for external communication and monitoring.
- ❑ 0-10VDC input modulation or remote target input.

Figure 1 Control sequence of operation

Display status text	Control action *(Also see Figure 20, page 50)*
POWER UP	• Check the boiler model listed on the power-up screen. If it is not correct, turn off the boiler. See page 59 for instructions to change setting. • When power is turned on, the screen lists sensors that are detected. If any sensor is not listed, make sure it is connected correctly. Turn off power and restart.
Standby	• Standby - no calls for heat. • Toggles through no dots, 1 dot, 2 dots, then 3 dots while in standby (wrench symbol will show instead if maintenance is needed).
Blower ON	• Call for heat detected. • Display on with BLUE banner (space heating) or PURPLE banner (DHW). • Start min/max timers if more than one system is calling - highest priority starts first. • Start circulators for this priority setup based upon settings. • Calculate target temp — If sensor temp is below target temp, begin firing sequence. • Blower to ignition speed for prepurge.
Ignition	• After prepurge times out, begin ignition cycle. • Activate gas valve and ignition spark. • Continue ignition spark for ignition period. • Turn off spark and use electrode to check for flame signal.
Space Heating	• Flame detected. • Release boiler to modulation. • NOTE: If flame is not detected, the gas valve is turned off, blower turns on (postpurge), and control starts cycle again. After 5 failures, the control waits 60 minutes, then tries again. • If priority timer times out, switch to next priority and start priority timer. • If demand satisfied, go to postpurge.
DHW Heating	• Flame detected. • Release boiler to modulation. • NOTE: If flame is not detected, the gas valve is turned off, blower turns on (postpurge), and control starts cycle again. After 5 failures, the control waits 60 minutes, then tries again. • If priority timer times out, switch to next priority and start priority timer. • If demand satisfied, go to postpurge.
Blower OFF	• Demand satisfied (temperature reaches target temperature or limit setting). • Gas valve off. • Blower to ignition speed for postpurge. • Return to standby after purge.
Maintenance	• Display banner turns BLUE, toggling between graphic screen and maintenance screen (occurs if maintenance schedule timer times out). • Will show during standby only. • Boiler operates as normal.
Error/fault	• Display banner turns RED due to error or limit event.
WWSD	• Warm weather shut down - the boiler will not be allowed to fire on space heating if the outdoor temperature is greater than the WWSD setting. • DHW operation is not affected by WWSD.

ECO Tec Control — Overview (continued)

Control features continued)

- ❑ Up to four (4) configurable outputs, including one (1) internal boiler circulator output.
- ❑ Additional heat demand operation to call a second heat source to help supply the energy required for heating.
- ❑ Advanced PI response to anticipate system needs.
- ❑ Flue temperature modifier to target temperature.
- ❑ Modulation based on flue sensor, Boiler out, DHW Flow sensor and DHW sensors.
- ❑ Dual temperature sensors on boiler outlet, DHW outlet and flue, providing redundant protection.
- ❑ Boiler is shipped with an outdoor sensor.
- ❑ Blower speed modulation to control boiler firing rate.
- ❑ Alarm relay on error/fault for use with an audible safety.
- ❑ Optional PREHEAT mode – Automatically maintains boiler water temperature to reduce boiler reaction time on Combi domestic hot water (DHW) draws.
- ❑ Select the mode of PREHEAT, between Off, Economy and High Performance.
- ❑ ECO BOOST – Reacts to homeowner use to recharge boiler water temperature once, if needed to reduce boiler reaction time on subsequent Combi domestic hot water (DHW) draws.
- ❑ Select whether or not to use the ECO BOOST feature. If conditions are met, the burner will continue to fire after Combi flow ends to recover temperature within the heat exchanger.
- ❑ Blower calibration – allows fine tuning of blower control to reach purge speeds faster, reducing time to heat delivery.
- ❑ Temperature units – Select between using °F or °C.
- ❑ Manual Reset High Temperature Limits – Set High Limit temperature safety value.
- ❑ Daylight Saving Time – Select whether your boiler will obey Daylight Savings Time for your region.

Multiple boiler operation

- The **ECO Tec** boiler has an auto detection feature for multiple boiler networks. The Master will automatically detect the presence of the other boilers wired to the network. (Feature requires separate kit).
- There will be a 30 second to 1 minute period until the Master may see the shadow boilers.
- Each shadow boiler must be assigned a network address, from 2 through 8. The address for each boiler must be unique, NOT selected for any other boiler.
- Afterwards, the Master will build a network based on the communications shared. If a boiler loses communication, the Master will automatically re-assign the lost boiler to where it was before once it is back on the network.
- When network inputs turn on, the Master boiler will enter the Network Modulation routine.
- Three system modulation types—SERIES, PARALLEL, AND SMART.
- Using system sensors, the Master will modulate the entire network to meet the energy requirements of Network Priority 1 and Network Priority 2 inputs when they are on.
- When a Local Priority input becomes active (switch closes), modulation for that input is not controlled by the Master, but instead is left to that local boiler using its own local Boiler Inlet and Outlet sensors.
- Each of the four (4) inputs (Input 2 and 3 for Combi models) on the Master or any of the Shadow boilers can be assigned as Network Priority 1 or 2 or assigned as Local Priority 1 or 2. Network Priority settings are common across all the boilers. These Network Priority settings can only be adjusted from the Master boiler.

Sequence of operation

Figure 1, page 3 is a summary of the operating sequence for the control.

- The statuses shown appear in the display as the control cycles the boiler. See Figure 21, page 51 for screen shots.
- The display banner will be red if a problem has been detected.

ECO Tec Control Priorities & Input/Outputs

For heating installations with multiple systems, the control uses **PRIORITIES** to determine the order of operation of the systems.

- The control's MAX and MIN time settings determine the maximum and minimum times a system will be operated before being turned off to allow another system to operate.
- A typical example is DHW priority — heat demand from the DHW system is given preference over space heating, if set to use Priority 1. (Combi DHW is defaulted to Priority 1 and cannot be changed).
- The MAX ON TIME setting controls the maximum time a priority will be allowed to run before switching to a lower priority's call for heat.
- The MIN ON TIME setting controls the minimum time a priority will be operated before switching to a higher priority's call for heat, or the next lower priority.
- Each PRIORITY has its own set of operating parameters.
- The control prompts the user to select the system type (finned tube baseboard, DHW, etc.) and is factory programmed with parameters suited to each of these system types.
- The user can also choose CUSTOM to create a system type.
- The 120VAC power output to the boiler circulator is provided by the boiler's control board.
- The **ECO Tec** control provides up to three (3) priorities for single boiler applications and up to four priorities for network boiler applications. The order of operation is:
- Single boilers: PRIORITY 1, PRIORITY 2, PRIORITY 3.
- Network boilers: LOCAL PRIORITY 1, NETWORK PRIORITY 1, NETWORK PRIORITY 2, LOCAL PRIORITY 2.
- For each boiler in a network, this provides up to two (2) local priorities, used for heating systems piped directly to the boiler, such as DHW tanks.
- Network priorities are used for heating systems connected in the primary heating loop and supplied by the boiler network.

ECO Tec Control — Overview (continued)

- Each boiler has up to four (4) input/output pairs (INPUT/OUTPUT 1, 2, 3 and 4) for Heating Only boilers, 2 and 3 for Combi models.
- Control setup prompts the user to assign each of these I/O pairs to a PRIORITY. The control then knows which system (priority) to operate when the input receives a call for heat. On a call for heat to an input, the control closes the corresponding output (120VAC) and begins controlling the boilers according to the setup for the assigned priority.
- When multiple inputs are set up on the same priority, they will run at the same time if the priority and inputs are active.

Boiler circulator

- The boiler circulator is factory installed inside the boiler cabinet.
- For multiple boiler systems, the boiler pump is defaulted to run and cannot be changed.

⚠WARNING The boiler circulator must be installed and connected. Flow through the boiler must be provided during all times of operation. Failure to do so can result in severe personal injury, death or substantial property damage.

ECO Tec control operation

- The control responds to signals from:
- DHW Flow demand (Combi models only).
- DHW Temperature sensor (Combi models only).
- Room thermostats.
- DHW aquastats (if used).
- Temperature sensors Boiler Out, Boiler In, flue temperature and when used, outdoor temperature.
- **For optimal performance, it is recommended to install System Supply and Return sensors.**
- The control automatically adjusts blower speed to match boiler output to space heating and/or DHW heating demand.
- The control provides up to four (4) inputs and four outputs (for circulators or auxiliary devices) plus a fifth (5) boiler circulator output based on selected boiler model.
- Outdoor reset must be used in all applications that are not exempt as described on page 2.
- The outdoor temperature is used for target temperature reset operation and for the Warm Weather Shut Down (WWSD) option.
- System presets:

  The control provides presets by system type for complete list, see Figure 25, page 55.

DHW Target

Set DHW target to the required Combi DHW water temperature for the application according to design mixing valve.

OUTDOOR TEMP FOR MIN TARGET

1. OUTDOOR TEMP FOR MIN TARGET means the outdoor temperature at which the target temperature reaches its minimum (Min Target Temp).
2. In the examples of Figure 2, this occurs at 70 °F (the factory default).

OUTDOOR TEMP FOR MAX TARGET

1. OUTDOOR TEMP FOR MAX TARGET means the outdoor temperature at which the target temperature reaches its maximum value (Max Target Temp).
2. In the examples of Figure 2, this occurs at 0°F outdoor (the factory default setting).
3. OutDOOR TEMP FOR MAX TARGET should equal the Outdoor Temp (outdoor design temperature) for the installation's location.

Outdoor reset operation

1. Set desired temperatures for space heating zones.
2. For an explanation of the target temperatures and associated outdoor temperatures, see Figure 2.
3. The temperature settings discussed below are accessed in the priority menu for the applicable system. For detailed explanations of the priority menus, see Figure 35, page 65.

Figure 2 Outdoor reset operation

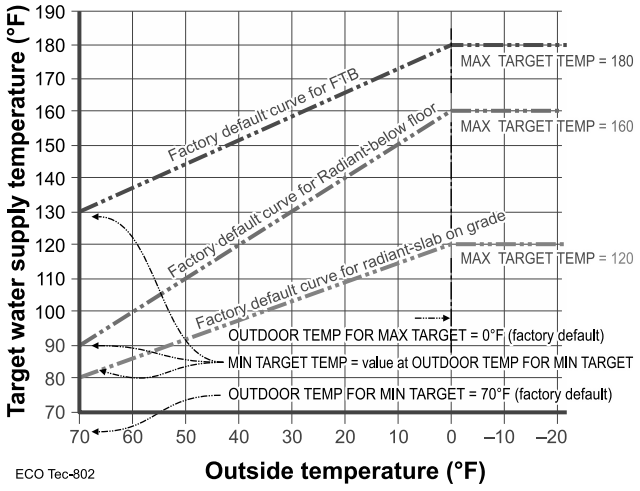

Figure 3 Remote target operation

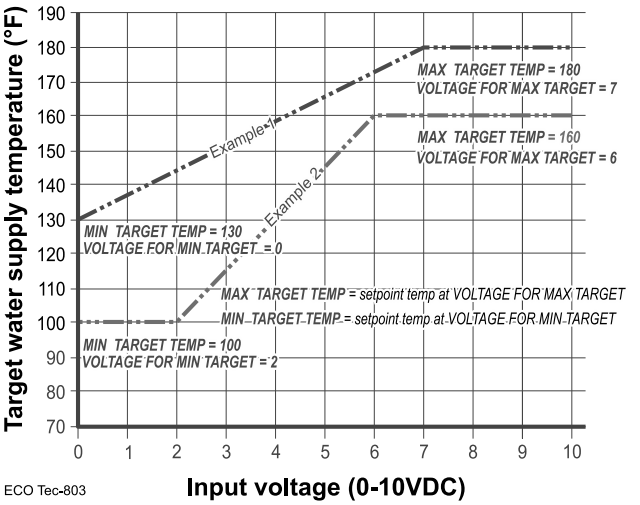

ECO Tec Control — Overview (cont.)

MAX TARGET TEMP

Set Max Target Temp to the required supply water temperature for the system at design maximum heat loss (typically 180°F for finned tube baseboard on new installations).

MIN TARGET TEMP

1. Min Target Temp should equal the desire minimum supply water termperature for the system.
2. The Min Temp is the setpoint whenever the ODT temp is above the ODT For Min Target and below the WWSD temps.

NOTICE Setting this value below the Outdoor Temp for Min Target may reduce the performance of the heating system at warmer outdoor temperatures.

3. This could be set as low as 60°F, which would supply "zero heat" when outdoor temperature is 70°F, because supply water temperature would close to room temperature. See examples in Figure 2, page 5.

Remote target operation (0–10VDC input)

1. This function allows a remote analog input to regulate the supply temperature for control operation/modulation. This can be done for any priority.
2. The settings discussed below are accessed in the Priority menu for the applicable system. For detailed explanations of the Priority menus, see Figure 35, page 65.
3. See Figure 3, page 5 for an explanation of target temperature vs voltage when using remote target operation.
4. In the priority menu for the applicable system, select 0-10V for the TARGET ADJUST setting.
5. In the same priority menu, select the VOLTS FOR MIN TARGET and VOLTS FOR MAX TARGET values. VOLTS FOR MIN TARGET sets the voltage value for the desired minimum supply temperature. VOLTS FOR MAX TARGET sets the voltage value for the desired maximum supply temperature.

Remote modulation operation (0–10VDC input)

1. To use 0-10VDC for remote modulation, go to Contractor Menu -> System Settings -> select the appropriate priority. Select Input 2 from System Setting menu, then change Input 2's source to 0-10V. The priority that is assigned to Input 2 cannot be used by any other Input. Only applicable for Single boilers. Network cannot use 0-10V remote modulation.
2. The boiler comes on at 0.9VDC and turns off at 0.6VDC. 1 VDC = 10% input. 10VDC = 100% input. These voltage settings are adjustable.

Combi Models — For DHW piping

Domestic Water Piping – Combi Boiler

⚠ DANGER Hot Water Can Scald!

- Consumer Product Safety Commission and some states recommend domestic hot water temperature of 130°F or less.
- When installing an **automatic mixing valve**, selection and installation must comply with valve manufacturer's recommendations and instructions.
- Water heated to a temperature suitable for clothes washing, dish washing and other sanitizing needs will scald and cause injury.
- Children, elderly, infirm or physically handicapped persons are more likely to be injured by hot water. Never leave them unattended in or near a bathtub, shower or sink. Never allow small children to use a hot water faucet or draw their own bath. If anyone using hot water in the building fits this description, or if state laws or local codes require certain water temperatures at hot water faucets, take special precautions:
  - Install **automatic mixing valve** set according to those standards.
  - Use lowest practical temperature setting.
  - Check water temperature immediately after first heating cycle and after any adjustment.

1. **Thermostatic Mixing Valve** - An ASSE 1070 **automatic mixing valve** for regulating domestic heating water **must** be used to regulate the water temperature leaving the plate heat exchanger. **NOTE:** the valve must be set to supply a domestic water temperature of not more than 120 degrees F. It is the responsibility of the installer to set the valve and remove or lock the dial depending on valve capabilities.

2. **Additional anti-scald devices** may be installed at each hot water faucet, bath and shower outlet.

Multiple boiler installations

Placing multiple boilers

1. Locate multiple boilers with spacings shown in Figure 4. Provide the indicated clearances around boilers for access and servicing.

WARNING If recommended dimensions are not possible, provide at least the minimum clearances given in the **ECO Tec** boiler manual. Also follow local codes.

2. If boilers are floor-mounted, construct a boiler foundation if boiler room floor is uneven or if there is a danger of flooding. Size the foundation to allow for clearance and spacing dimensions shown in Figure 4.
3. Provide a minimum 24-inch walkway in front of the boilers to ensure accessibility.
4. Uncrate, assemble and mount boilers according to instructions in the **ECO Tec** boiler manual.
5. Provide clearances needed for installation of venting, air piping, gas piping, expansion tank, primary circulator and other accessories. Clearances must comply with all applicable codes.

Figure 4 Side-to-side mounting of multiple **ECO Tec** boilers

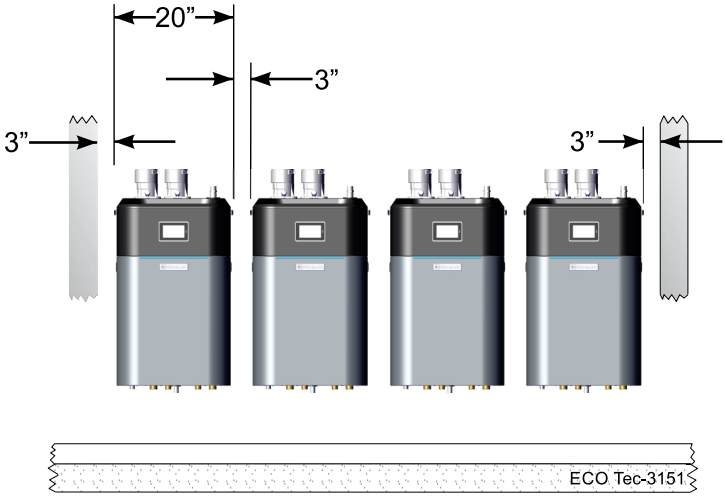

Manifolded combustion air option

1. Multiple **ECO Tec** boilers can use a common combustion air manifold.
   a. Provide minimum clearance to adjacent vents and grade/snow line as shown in Figure 5.
   b. Provide minimum free area in duct (adjusted for louver restriction) of **1 square inch per 2,000 Btuh** total boiler input. See below. Also see information in Boiler Ratings section of boiler manual.
   c. If combustion air damper is used, wire to boilers to prevent operation, except after damper has opened.

WARNING ONLY air piping can be combined. DO NOT use combined vent piping. Flue gas leakage and boiler component damage can occur. Failure to comply could result in severe personal injury, death or substantial property damage.

2. Calculate required cross sectional area of combined combustion air duct (for area in square inches):

MINIMUM DUCT AREA
= TOTAL MBH INPUT DIVIDED BY 2

3. Example: A multiple boiler system with six (6) **ECO Tec** 150 boilers has a total input of 6 x 150 = **900** MBH (900,000 Btuh). The required duct cross sectional area would be:

MINIMUM DUCT AREA
= 900 DIVIDED BY 2
= 450 sq. inches

Figure 5 Manifolded combustion air option

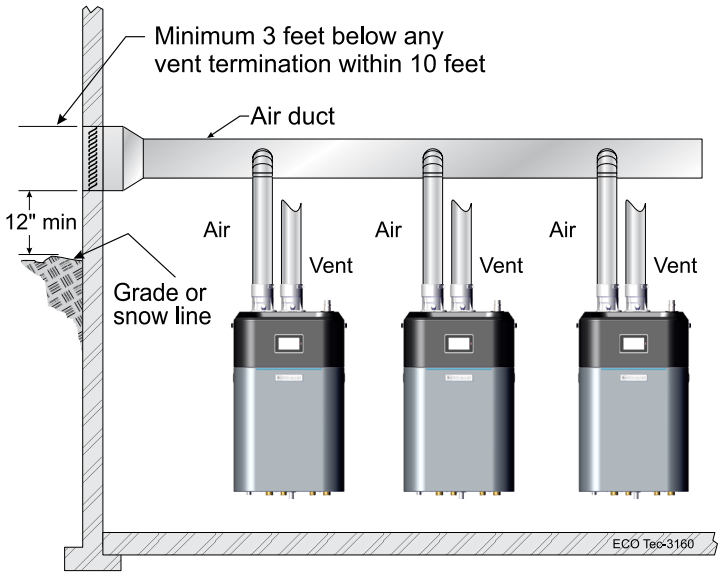

Multiple boiler installations (continued)

Easy-Fit® piping installation

1. Main header and Easy-Fit® Manifold pipe sizing.
   a. Size system piping as required for the flow.
   b. Install tees on the system piping for Easy-Fit® manifolds as shown in Figure 6 or Figure 7. Size manifolds to handle total connected boiler output as shown.
2. Provide connections in main header for Easy-Fit® manifolds as close as possible to the midpoint of multiple boilers.
   a. Use tees for four or less boilers, as in Figure 6.
   b. Use either tees (Figure 6) or crosses (Figure 7) for five or more boilers.
3. Manifold placement:
   a. To alternate spacing for supply and return lines to boilers, reverse the short-end and long-end of the manifolds as shown in Figure 6 and Figure 7.
   b. Return manifold must be on the return side of the main and supply manifold must be on the supply side of the main. Drawings in this manual show flow in system main from right to left. For system flowing left to right, reverse the locations of the manifolds accordingly.
4. Connect from Easy-Fit® manifold branches to boiler supply and return connections using copper or steel pipe, sized for the required flow rate.

NOTICE It is recommended to pipe to boilers such that the first boiler connection off the return manifold is piped to the furthest connection on the supply manifold from the main header. See Figure 9, page 17 and Figure 11, page 21 for example.

5. Install an isolation valve on the supply and return of each boiler as shown in the piping diagrams in this manual. Some local codes may require the use of individual water level controls and limits on each boiler because isolation valves are installed.
6. Install main system air eliminator and primary circulator in supply piping as shown in piping diagrams. Place expansion tank on suction side of system circulator as shown.
7. Install system accessories as shown in drawings.
8. Piping recommendation drawings:
   a. Figure 6 and Figure 7 show details of Easy-Fit® manifolds.
   b. Figure 8, page 9 is a schematic piping drawing showing the locations of typical boiler piping and system piping, including limits and other devices often required by local codes.
   c. Figure 8, page 14 and Figure 10, page 18 are three dimensional piping drawings of typical multiple boiler installation.
   d. Figure 12, page 22 shows recommend piping when an isolating heat exchanger is needed.

If desired, other primary/secondary piping arrangements can be used.

Maximum connected load per manifold:

2-inch manifold — 450 MBH
3-inch manifold — 1400 MBH
4-inch manifold — 2900 MBH

Figure 6 Single-sided EZ-Fit Header connection

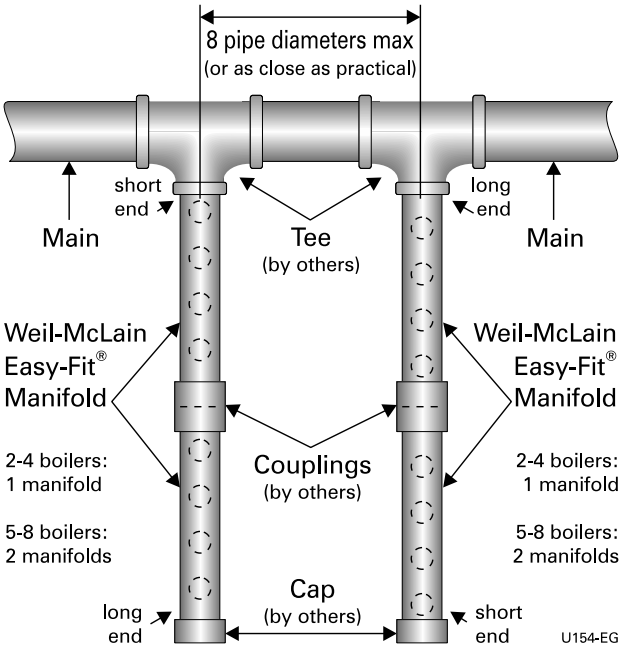

Figure 7 Double-sided EZ-Fit Header connection

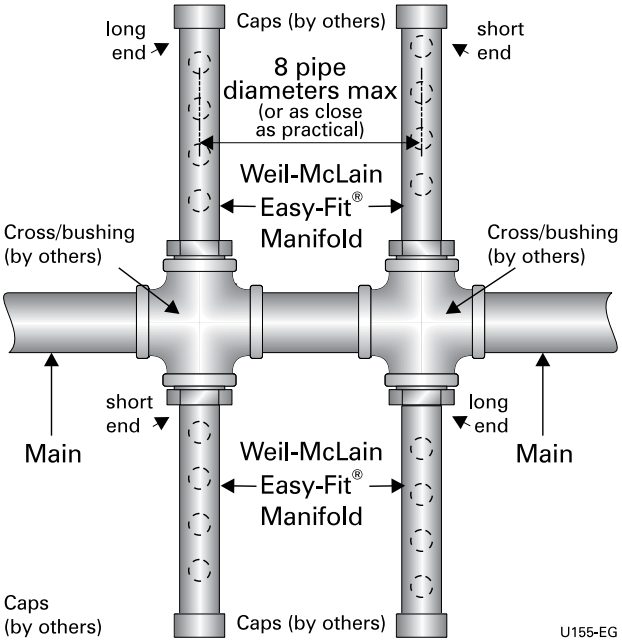

Multiple boiler installations (continued)

Figure 8 Piping schematic — typical piping for multiple **ECO Tec** boilers, using Weil-McLain Easy-Fit manifolds (adjust boiler connections as required for other boiler models)

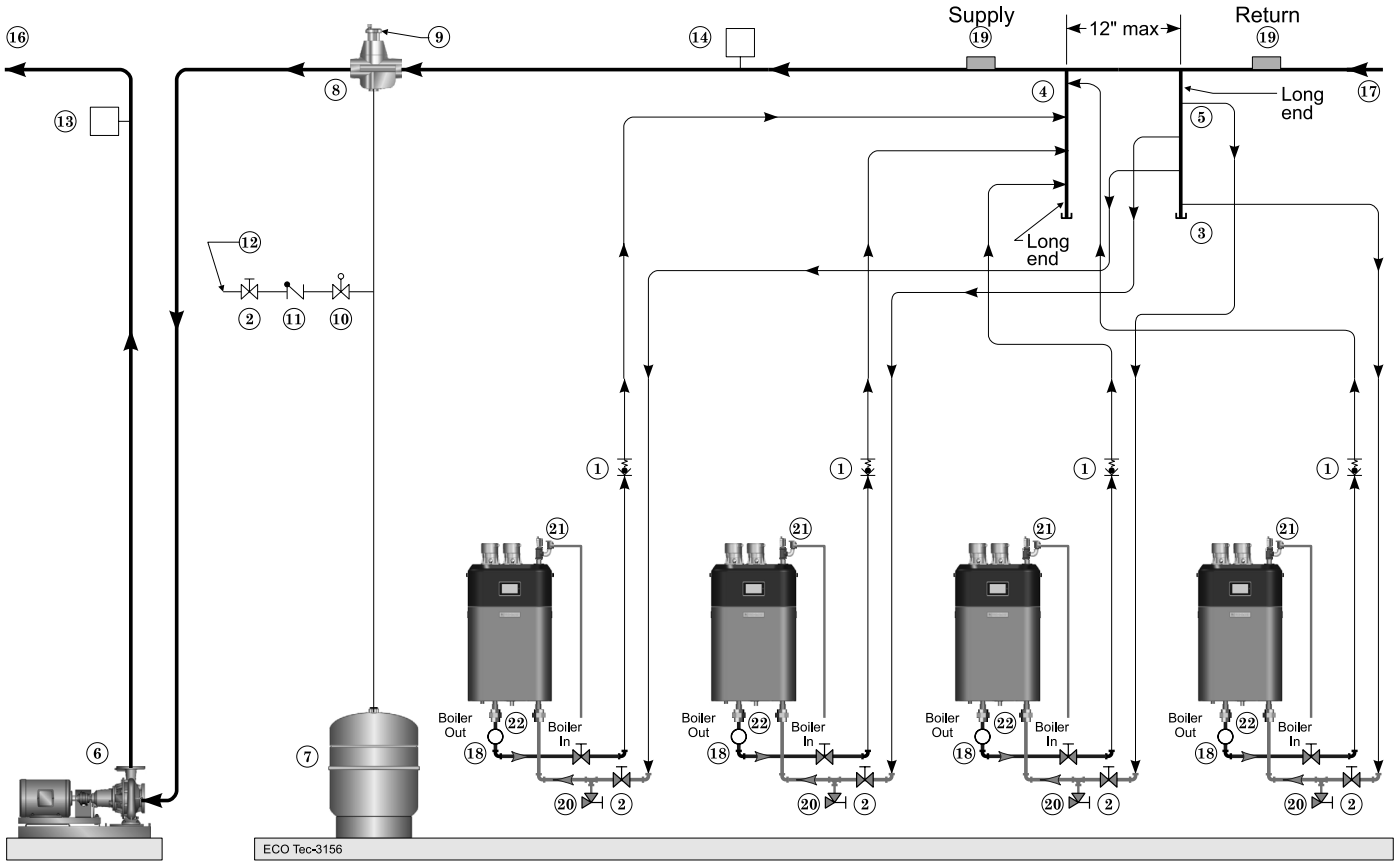

Legend — Figure 8

1 Flow/check or spring check valve.
2 Isolation valves.
3 Cap.
4 Easy-Fit® Manifold (supply) — layout and size per page 8.
5 Easy-Fit® Manifold (return) — layout and size per page 8.
6 Primary circulator.
7 Expansion tank (diaphragm type).
8 System air eliminator.
9 System automatic air vent.
10 Pressure reducing valve.
11 Check valve or back flow preventer, as required by applicable codes.
12 Cold water supply.
13 Supply water temperature control (when used).
14 Water flow switch (when used) — locate a flow switch in each boiler loop if individual protection is required.
15 Boiler circulator (Internal to boiler) not shown.
16 System supply.
17 System return.
18 Boiler P/T gauge, installed per the **ECO Tec** boiler manual.
19 Strap system supply and return sensors to lines as shown, at least 6 pipe diameters (but no more than 3 feet) from boiler connection tees.
20 Boiler drain valves.
21 Relief valve and discharge piping, installed per the **ECO Tec** boiler manual.
22 Unions (recommended).

EXPRESS SETUP — Requirements by Boiler

EXPRESS SETUP

ECO Tec control **EXPRESS Setup** takes advantage of the control **WIZARD** to provide the shortest possible method to set up the control.

Perform the **EXPRESS Setup** steps on page 11 to ensure the minimum adjustments needed for ADVANCED control operation are completed.

The remainder of this manual provides detailed information about control setup and operation available for fine tuning, troubleshooting and custom setup applications.

WARNING **Temperature settings** — You must ensure that the **ECO Tec** control is set for the proper water temperatures for the system. Excessive water temperature can cause significant property damage in some applications.

Multi-temperature systems — If the heating system includes circuits that require lower temperature water (radiant slab circuits, for example) as well as higher temperature circuits (DHW, finned tube baseboard, etc.), it is recommended to protect low-temperature circuits with limit controls that are wired to an **ECO Tec** control external limit circuit. Failure to provide regulation can result in substantial property damage.

Setup for single boilers

For single boilers not operated as part of a network, follow the single-boiler setup procedures in the **ECO Tec** boiler manual.

NOTICE **Using an external multiple boiler controller** — Remote modulation using an external controller only works with each boiler set up as a SINGLE boiler in the ECO Tec Control setup. Follow instructions in this manual to setup the control.

Multiple boiler networks

Multiple boiler networks are configured with a **MASTER** boiler and one or more **SHADOW** boilers. (See above for applications using external controller.)

- The **MASTER** boiler control regulates the firing of all boilers when providing heat to the system zones.
- **SHADOW** boilers respond to heat demand from the master control except when operating for local (direct-connected) heat calls.

Priorities

The **ECO Tec** control allows assigning of multiple priorities. These priorities will be given preference in the order below:

- Single boilers: PRIORITY 1, PRIORITY 2, PRIORITY 3.
- Multiple boilers: LOCAL PRIORITY 1, NETWORK PRIORITY 1, NETWORK PRIORITY 2, LOCAL PRIORITY 2.

If a lower priority is activated a fresh call for heat is sensed, the boiler will switch immediately to it for Local-1, or activate the highest rotation order boiler for Network calls. In this case, the control switches to Network calls from Local-2 immediately, or after Max On time has expired from Local-1.

NOTICE DHW circuit in system — For high-demand DHW circuits, the control setting for MIN BOILERS must be set using the NETWORK 1 or NETWORK 2 priority menu after the WIZARD is completed to ensure quick response to demand. See page 68 for a description of the MIN BOILERS setting.

Timings

Timing settings regulate boiler sequencing and ensure minimum and maximum operating times for heating calls on each system. Timings can be adjusted during the Wizard setup or manually, as explained elsewhere in this manual.

Also see page 61 for additional information on control timings and rotation and sequencing methods.

NET MIN ON TIME (multiple boilers only)

- This parameter is available during the Wizard or manually in the NETWORK SETTINGS menu (Figure 30, page 60).
- When a boiler is being called on by the master boiler to satisfy a **network** demand, the boiler will fire for at least as long as the MIN TIME ON NET before it switches to satisfy a Local Priority if one is active.
- This timing avoids short cycling due to changes in demand.

MIN ON TIME

- This parameter is available during the Wizard or manually in the PRIORITY SETTINGS menu (Figure 35, page 65).
- When the boiler is being called on to satisfy a higher priority, the boiler will fire for at least as long as the MIN ON TIME before it switches to satisfy that priority.
- This timing avoids short cycling due to changes in demand.

NET MAX ON TIME (multiple boilers only)

- This parameter is available during the Wizard or manually in the NETWORK SETTINGS menu (Figure 30, page 60).
- When a boiler is being called on by the master boiler to satisfy a **network** demand, the boiler will fire for no longer than the MAX TIME ON NET before it switches to satisfy a Local Priority if one is active.
- This timing avoids a long-duration call from preventing other demands from being met for too long a duration.

MAX ON TIME

- This parameter is available during the Wizard or manually in the PRIORITY SETTINGS menu (Figure 35, page 65).
- When a boiler is being called on by to satisfy a lower priority, the boiler will fire for no longer than the MAX ON TIME before it switches to satisfy that priority.
- This timing avoids a long-duration call from preventing other demands from being met for too long a duration.

EXPRESS SETUP — Steps

WARNING The **WIZARD** must be used when using the **EXPRESS Setup** procedure. This is necessary to ensure that all required settings are made. In addition, all instructions in the **ECO Tec** boiler manual must be followed completely. Failure to comply could result in severe personal injury, death or substantial property damage.

Step 1 **Mechanical**	• Install boiler(s) per **ECO Tec** boiler manual and all applicable codes, including vent/air piping and water piping. • See suggested piping in this manual and boiler manual. Each boiler **must** be connected with primary/secondary piping. A circulator is provided and factory installed in both Combi and Heating Only boiler models.	• As shown in the suggested piping examples, DHW tanks can be either piped directly off of individual boilers or as a separate zone in the heating system. • See page 7 for additional information on multiple boiler installation options.
Step 2 **Electrical**	For details, see **FIELD WIRING** information beginning on page 33. **BOILER POWER SUPPLY** • Connect 120 VAC power to boiler as directed on the boiler wiring diagram (on boiler and on page 35). **INPUTS & OUTPUTS** • Each boiler provides four (4) input/output pairs for Heat Only models and two (2) input/output pairs for Combi models. Input circuits are 24VAC. DO NOT apply voltage. Use dry contacts only. Outputs are 120VAC, 2.2-amps max (use relays if loads exceed 2.2 amps or if outputs must be 24VAC or must be isolated contacts). • The input/outputs can be used with zone thermostats and zone circulators or zone valves (requires isolation relays unless valves are 120VAC), providing up to four zones per boiler on a multiple system. • Each boiler has a pre-installed internal boiler circulator and provides a factory wired 120VAC output. • 'If required, the AUX PUMP/OUTPUT feature can turn any of the input/outputs into a customized output with many operation types. This should be used for system pumps which operate independently from a heat demand or when multiple inputs should activate a common output. Setup can be done through the WIZARD or manually in System Settings, Input menu.	**SENSORS** • Connect an outdoor sensor, system supply sensor and system return sensor to at least one of the boilers in a multiple boiler system. • Preferably, connect outdoor, system supply and system return sensors to more than one boiler to provide redundancy. If one of the sensors fails, the master boiler control automatically looks for an available sensor. **MULTIPLE BOILER COMM CABLES** • For multiple boilers, connect boiler-to-boiler communication cables as directed on page 41. **ADDITIONAL INFORMATION** • For flow switch or CAD interlock wiring, see page 39. • For external limit connections, see page 37. • For low water cut-off connections, see page 38. • For 0–10VDC inputs, see page 40. • For 0–10VDC outputs, see page 40. **ZONING METHODS** • See wiring and control setup information for typical zoning applications beginning on page 48. • See example systems beginning on page 17.
Step 3 **POWER ON**	NOTICE Follow all instructions in the boiler manual, including all pre-start-up inspections and final checks. • Turn OFF the manual gas cock at the boiler to prevent gas flow during setup.	• Turn the boiler ON. • Follow the prompts on the screen to reach the BOILER SETTINGS initial start-up screen. • See Figure 20, page 50 for navigation information. Note that the screen sequence changes after initial setup, as shown.
Step 4 **Wizard**	• Select the **START WIZARD** option when prompted (see Figure 20, page 50). • Use on-screen help as needed. For additional information, see details in this manual.	**DO NOT** select **SKIP WIZARD** unless the control is to be configured manually. NOTICE **SINGLE BOILERS** — Set up the control following instructions in the boiler manual.
Step 5 **Finish setup**	• Some additional control settings may need to be changed, depending on the application.	• See explanation of control operation and settings, beginning on page 50.
Step 6 **Start-up**	• Apply the boiler manual instructions to verify the installation and to start up the boiler, using combustion test instruments as directed.	

EXPRESS SETUP — The WIZARD

- The **WIZARD** is available on the initial setup of the boiler. It can however be accessed later. If the **WIZARD** is accidentally by-passed, follow navigation sequences shown on page 58 and page 59. Select **RESET FACTORY DEFAULTS** on the Boiler Settings menu. "Select **RESTART WIZARD**", follow screen directions. Boiler setup must then be started over from the beginning.
- The **WIZARD** leads through a step-by-step setup procedure designed for the application chosen.
- Context-sensitive help is available to explain the purpose of key setup items.

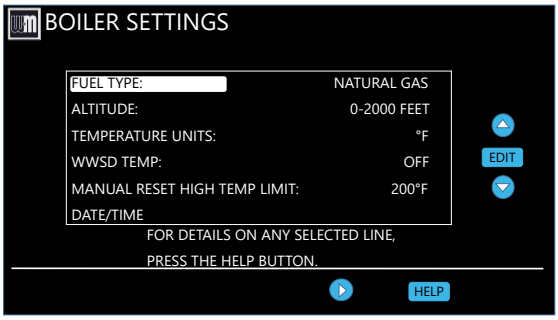

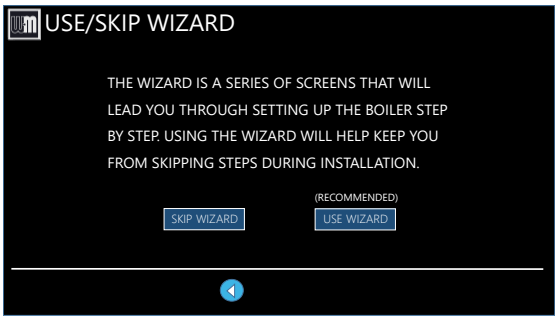

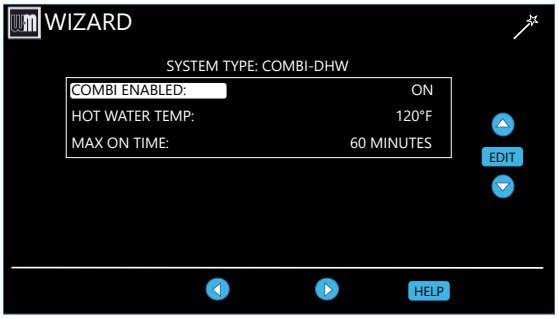

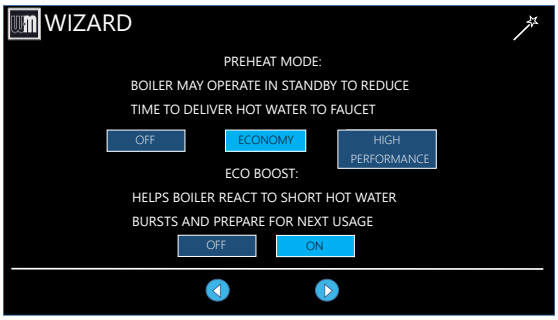

Screens shown above are typical only. Actual screens depend on control settings chosen.

MENU Item	PURPOSE
BOILER SETTINGS WIZARD SCREEN	• This screen appears on initial start-up. • Perform the **WIZARD** steps for every boiler. • **ALTITUDE** and **FUEL TYPE** are critical parameters. They must be entered correctly for each boiler before proceeding. • Enter the **WWSD** temperature – This sets the outside temperature below which Space heating systems will be disabled. WWSD must also be selected during system setup to enable it. • Manual Reset High Temperature Limit acts as a temperature safety. Exceeding this temperature control will enter lockout and require a manual reset to continue.
USE/SKIP WIZARD SCREEN	• **SELECT USE WIZARD**. • **DO NOT** select **SKIP WIZARD**. Selecting **SKIP WIZARD** will take the screen to the **USER MENU**. All setup would then have to be done manually.
COMBI ENABLED WIZARD SCREEN	• This screen only appears when the boiler is a Combi boiler. • **COMBI ENABLED:** Turn ON if the boiler is ready to run these Combi DHW priority. Turn OFF if not ready to run these calls yet. This can be edited later in the Priority's settings. • **Hot Water Temp:** Select the Combi DHW priority maximum output temperature from boiler up to 140° F. • **Max On Time:** Select how long the boiler will operate on this call for heat before changing to satisfy another priority.
ADD'L COMBI FEATURES WIZARD SCREEN	• This screen only appears when the boiler is a Combi boiler. • Preheat mode: The boiler will maintain an internal temperature according to the setting selected. Economy has a lower setpoint than High Performance and may consume less energy. • **ECO® Boost:** Keeps the burner running during short burst of hot water draws to reduce hot-cold swings.

EXPRESS SETUP— The WIZARD (continued)

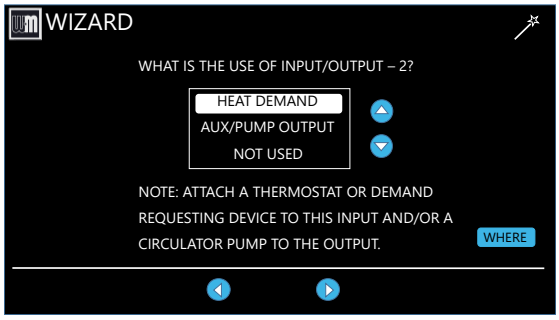

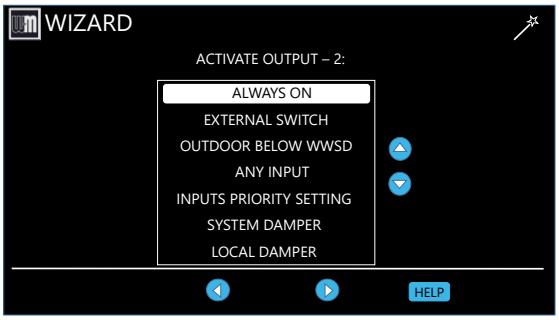

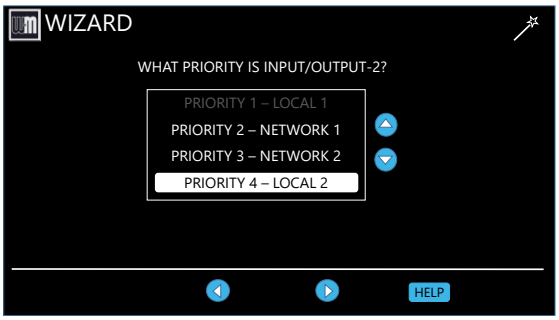

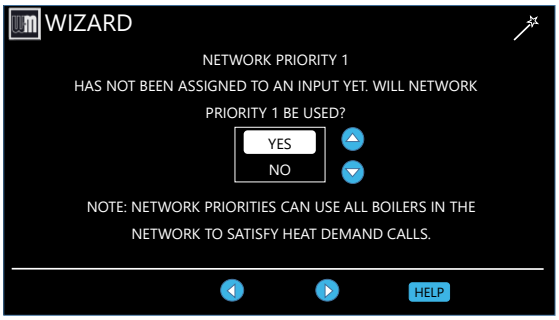

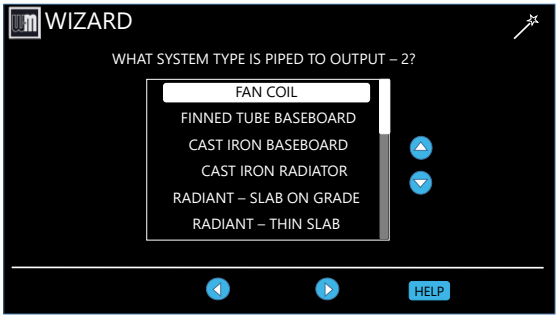

INPUT/ OUTPUT WIZARD SCREEN	• Each boiler provides four (4) input/output pairs for Heat Only models and two (2) input/output pairs for Combi models. Each pair can be setup to function as a call for heat with output or to perform as an auxiliary function, such as operating a system pump. • After the **WIZARD** screens are completed for **INPUT 1**, the **WIZARD** starts over with **INPUT/OUTPUT 2**, then to **INPUT/OUTPUT 3** after 2 is completed, followed by **INPUT/ OUTPUT 4.** • Select **HEAT/DHW DEMAND** if the input/output is connected to a heating or DHW zone or system. The input could be a zone thermostat or end switch. The output could be 120VAC to a circulator (2.2 amps or less) or isolation relay. • Select **AUX PUMP/OUTPUT,** use this screen to set when a **AUX PUMP/OUTPUT** is activated. For detailed explanation see Figure 40, page 70, if the input is to be used for a system pump, combustion air damper interlock, etc. • To operate a system pump, setup the input as **AUX PUMP/ OUTPUT.** Connect the corresponding output to the system pump or pump relay (if pump load exceeds 2.2 amps). When the **ACTIVATE OUTPUT #** screen appears, select the setting applicable to your application. • Select **NOT USED** if the input/output is not needed.
PRIORITY/ SELECTION WIZARD SCREEN	• For multiple boiler applications, the ECO Tec control provides up to four priorities, as listed on this screen. Preference is given to these priorities in the order shown (Priority 1 through 4). • Select which priority will be operated by this input/output. • All boilers can operate on demand from Network priorities. • **NETWORK PRIORITIES:** – Any input on any boiler can be assigned to a network priority (NETWORK PRIORITY 1 or NETWORK PRIORITY 2). – The WIZARD will only allow settings to a Network Priority on the Master Boiler. It will skip setting up a Network Priority on all shadow boilers. – All boilers on the network will fire to meet network demands. – The Network Priority Not Assigned screen only appears when a Network Priority is not setup on the Master. • **LOCAL PRIORITIES:** – Any boiler can use its input/outputs to operate up to two local priorities (LOCAL PRIORITY 1 and LOCAL PRIORITY 2). This applies only for heating loops directly piped to the boiler. – Local demands are only satisfied by the boiler to which the input is wired. Local heating loops must be directly piped to the boiler. – Combi DHW will always be a Local Priority 1 so it is unavailable for remaining two (2) Input/Output pairs on Combi models.
SYSTEM TYPE WIZARD SCREEN	• Use this screen to select the System type for this priority. • The control will automatically set operating parameters to suit the system type chosen. • To see factory default settings for each system, see Figure 25, page 55. • Operating parameters can be customized in the next screen, if desired. • Select CUSTOM to manually configure the operating settings for the system and bypass WWSD setting for this priority. • **NETWORK PRIORITY 1 or 2 –** This screen will not show on a shadow boiler if the input/output is assigned to a network priority. The screen will only appear on the Master boiler, where the priority must be configured.

EXPRESS SETUP — The WIZARD (continued)

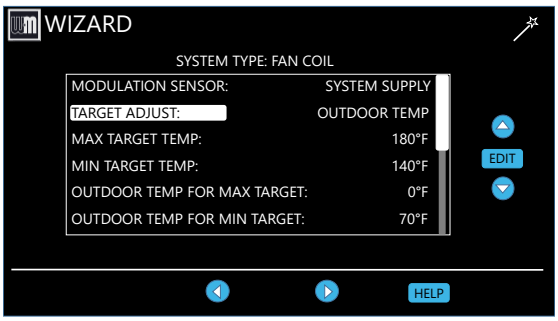

Screens shown above are typical only. Actual screens depend on control settings chosen.

PRIORITY SETTINGS WIZARD SCREEN	• **SYSTEM TYPE** – Read only (assigned in previous step). • **TARGET MOD SENSOR** – Read only for network boilers, adjustable for single boilers – Shows which sensor reading is used for modulation. Boiler sensor is default for local priorities. System sensor is default for network priorities. • **TARGET ADJUST** – Select how target temperature is calculated — **NONE** (no reset, fixed target temperature = MAX TARGET TEMP) **ODT** (Outdoor reset operation; default setting). Target temperature is calculated from the outdoor reset curve. MAX TARGET TEMP is target temperature when outside temperature equals Outdoor temp for MAX target. MIN TARGET TEMP is target temperature when outside temperature equals Outdoor temp for MIN target. At outdoor temperatures in between, target temperature is scaled proportionally. See Figure 2, page 5 for details. **0–10V** (target temperature based on input from remote source). MAX TARGET TEMP is target temperature at VOLTAGE FOR MAX TARGET value. MIN TARGET TEMP is target temperature at VOLTAGE FOR MIN TARGET value. For voltage values between max and min, target temperature is scaled proportionally. See Figure 3, page 5 for details. • **MAX TARGET TEMP** – Set MAX TARGET TEMP to the required supply water temperature for the system at design maximum heat loss (typically 180°F for finned tube baseboard on new installations.) • **MIN TARGET TEMP** – MIN TARGET TEMP should equal the desired minimum supply water temperature for the system. This line will not show if Target Adjust is selected as NONE. • **OD RESET MAX** – means the outdoor temperature at which the target temperature reaches its minimum (MIN TARGET TEMP). (Does not appear if 0–10V is selected for Target Adjust.) • **OD RESET MIN** – means the outdoor temperature at which the target temperature reaches its maximum value (MAX TARGET TEMP). (Does not appear if 0–10V is selected for Target Adjust.) • **VOLTAGE FOR MAX TARGET** – Appears if 0–10V is selected for Target Adjust. Set the voltage at which SUPPLY MAX temperature is required. • **VOLTAGE FOR MIN TARGET**– Appears if 0–10V is selected for TARGET ADJUST. Set the voltage at which MIN TARGET TEMP temperature is required. For voltages between Min and Max, the target temperature will be adjusted on a linear curve. • **BOOST TIME** – Every time the call for heat surpasses this duration of time the target temp will boost up 10°F. It will cap off at Supply Max. Only active if a reset curve via Target Adjust setting is being used. • **RUN BOILER PUMP** – Selects whether the Boiler Pump is turned on while running on this call for heat. This setting is YES for network priorities and is not adjustable. • **RUN AUX PUMP/ OUT** – Selects whether Inputs/Outputs in the system configured as AUX PUMP/OUTPUT are turned on while running on this call for heat. • **MAX ON TIME / MIN ON TIME** – Maximum or minimum time the network will run on this priority if it is being asked to run on another network priority. MAX shows for Network Priority 1, MIN shows for Network Priority 2. This line ONLY shows on the Master boiler Wizard. It does not appear on Shadow boilers.

EXPRESS SETUP— The WIZARD (continued)

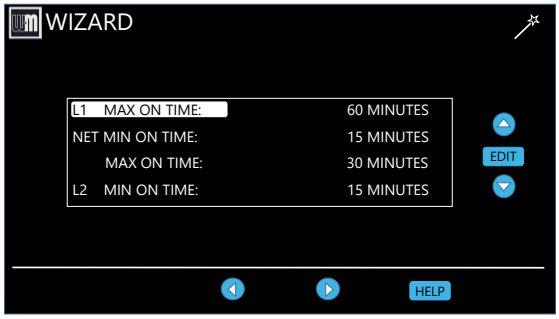

PRIORITY TIMERS WIZARD SCREEN	• The timings set on this screen prevent the boiler from operating too long on one demand if another demand is present. They also prevent short cycling on a demand. • L1 and L2 are times for local priorities. • **NET MIN ON TIME** and **NET MAX ON TIME** are the maximum and minimum times this boiler will dedicate to a call from a network demand.
SEQUENCE TYPE WIZARD SCREEN	• Use this screen to set how boilers are sequenced and how usage is rotated between boilers on the network. • For a complete explanation of Sequencing and Rotation, see pages 62 and 63. • **Sequencing** means the way in which boiler firing rate is controlled as boilers are turned on and off by the Master boiler. – With the default settings, **SMART SEQUENCING®** maximizes efficiency when adding boilers to the network. It runs more boilers to satisfy the demand. Boilers added start at the user-set Base Rate Low. – With the default settings, **PARALLEL SEQUENCING** balances efficiency and number of boilers running. Each boiler modulates up to the user-set Base Rate High before adding another boiler. – With the default settings, **SERIES SEQUENCING** minimizes the number of boilers running. Each boiler modulates to its Max Rate before adding another boiler. • **Rotation** means how and how often the boiler firing order is changed. – **LEAD BOILER ROTATE** options are based on how long a boiler has operated. Select either **OFF**, **BY BOILER ID**, **TOTAL HOURS** or **INCREMENTAL HOURS**. See detailed explanation of options on page 61. – Use the **ROTATE FREQUENCY** setting to control how often the rotation sequence is changed. – **FORCE LEAD ROTATE** – If set to YES, then when the frequency timer expires and the new order is calculated, this forces the new boiler order to take effect while a heat demand is currently active.

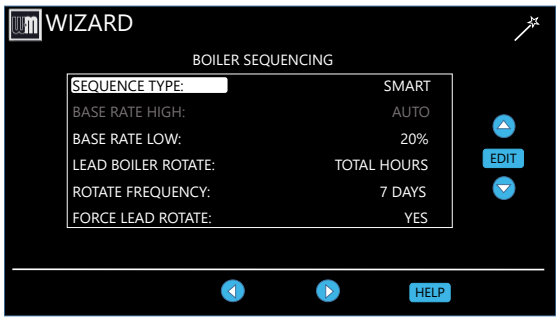

Screens shown above are typical only. Actual screens depend on control settings chosen.

EXPRESS SETUP — The WIZARD (continued)

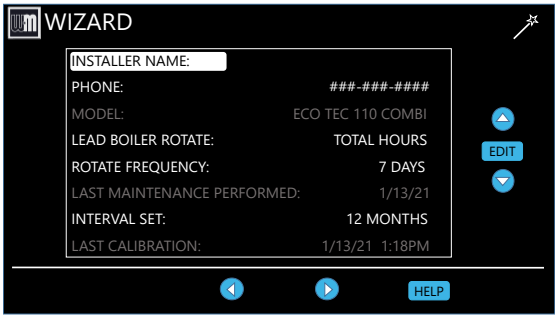

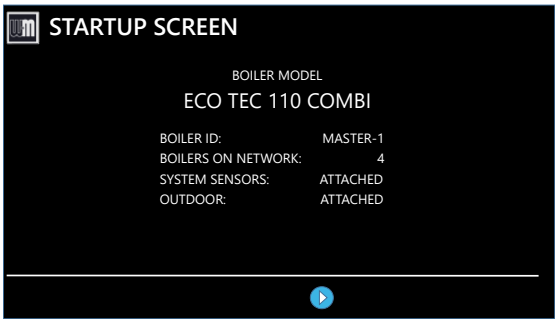

MAINTENANCE WIZARD SCREEN	• Use this screen to enter relevant data about the Contractor (installer) and boiler. • See Figure 43, page 72 for full explanation of the inputs on this menu.
STARTUP SCREEN	• This screen summarizes what external sensors are on the boiler, how many boilers are on the network, and the ID of the boiler.

Screens shown above are typical only. Actual screens depend on control settings chosen.

EXPRESS Setup — Typical Application A

Figure 9 Typical Application A — Piping layout — typical piping for multiple **ECO Tec Heating Only** boilers, using Weil-McLain Easy-Fit manifolds (2-boiler system) (adjust boiler connections as required for other boiler models)

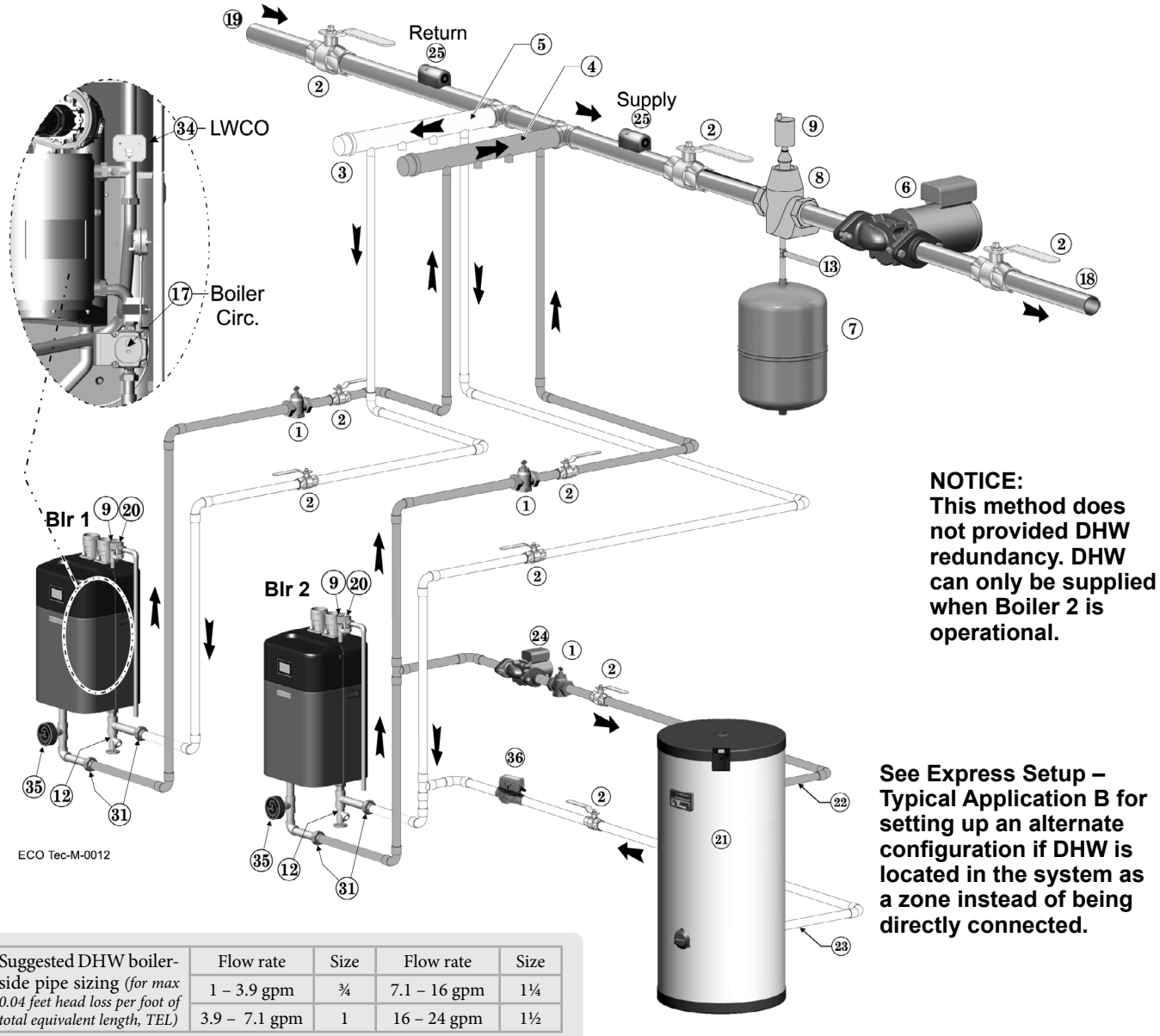

NOTICE:
This method does not provided DHW redundancy. DHW can only be supplied when Boiler 2 is operational.

See Express Setup – Typical Application B for setting up an alternate configuration if DHW is located in the system as a zone instead of being directly connected.

Suggested DHW boiler-side pipe sizing *(for max 0.04 feet head loss per foot of total equivalent length, TEL)*	Flow rate	Size	Flow rate	Size
	1 – 3.9 gpm	¾	7.1 – 16 gpm	1¼
	3.9 – 7.1 gpm	1	16 – 24 gpm	1½

Legend — Figure 9

1 Flow/check or spring check valve.	20 Boiler relief valve and discharge piping, installed per **ECO Tec** boiler manual.
2 Isolation valves (when used).	21 Indirect-fired storage water heaters (Weil-McLain Aqua Plus Line shown) — Example is shown connected to one boiler of the system. Setup is shown on the next page for this configuration and also for the option of a DHW tank installed as a system zone.
3 Caps.	22 DHW boiler water supply, typical.
4 Easy-Fit® Manifold (supply) — layout and size per page 8.	23 DHW boiler water return, typical.
5 Easy-Fit® Manifold (return) — layout and size per page 8.	24 DHW boiler-side circulator and flow/check valve.
6 System circulator. (not used if system is circulator zoned)	25 Strap system supply and return sensors to lines as shown, at least 6 pipe diameters (but no more than 3 feet) from boiler connection tees. For redundancy, you can install a supply and return sensor connected to each boiler.
7 Expansion tank (diaphragm type).	31 Unions (Recommended).
8 System air eliminator.	34 Low water cutoff (Recommended to install internally to boiler).
9 Automatic air vent.	35 Pressure/Temperature gauge.
12 Boiler drain valves.	36 Zone valve
13 Cold water supply (per applicable codes).	
17 Boiler circulator — circulates water between boiler and Easy-Fit® Manifolds (Factory installed inside the boiler).	
18 System supply.	
19 System return.	

EXPRESS Setup — Typical Application A (cont.)

Purpose

- Space heating with multiple zones using system pump or zone circulators.
- Zoning with circulators or zone valves.
- DHW piped directly to the Shadow 2 boiler.
- DHW priority-Space heating is discontinued during cal for heat from water heater. Incorrect. Consider DHW priority-Shadow boiler 2 provides priority to locally piped DHW while network heating is discontinued on that boiler. Boiler 1 will continue to service network system.

Control setting notes

- See the table on page 20 for required and optional settings.
- The table follows the general setup required to achieve the shown systems with shown priorities.
- Settings can be made using the WIZARD or by following instructions elsewhere in this manual to enter the settings manually.

Circulators and piping

WARNING Provide an external relay and external power to any circulator if its load rating exceeds 2.2 amps or 16.4 amps in rush.

- Piping must be primary/secondary as shown.
- DHW circulator must be selected to handle the pressure drop through the indirect water heater and piping and should provide equivalent or greater flow than boiler circulator. DHW circulator supplied by installer.
- A zone valve must be added to the Indirect Tank piping to prevent ghost flow thru tank during boiler operation while satisfying a system heating call.
  - A 120V zone valve may be wired in parallel with the indirect tank circulator if the total amperage between the valve and circ is 2.2A or less (Shown in Shadow 2 Boiler - Field Wiring on page 19).
  - If using a 24V zone valve or if the amperage is greater than 2.2A, an isolation relay is needed.
  - A 4-wire, 24V zone valve with an isolated end switch may also be used. A 24V power supply will be needed to power the thermostat / zone valve circuit. The indirect's temperature control must be wired to open the zone valve and the zone valve end switch wired into the boiler's input 1 (Priority 1 - DHW).
- For some large indirect water heaters, the required flow rate may require piping the water heater differently.

Field Wiring LEGEND for Applications A, B, C and D

* = **Supplied by installer**

1 BOILER circulators

2 DHW circulators *

3 System circulator and relay* page 18

4 Zone circulators *

4 Zone valves (120V shown) *

5 Service Switch *, 120VAC power supply, 15-amp minimum rating

6 Control

7 Zone thermostats *

8 System supply temperature sensor *— strap to supply line

9 System return temperature sensor *— strap to return line

10 DHW tank aquastats *

11 Outdoor temperature sensor (supplied with boiler; install if Control will be set for outdoor reset operation)

12 Low water cutoff *

13 Shell-side circulators * page 26

- The control settings in table on page 20 provide DHW priority — space heating will be discontinued during a call for DHW.
- Zone circulators and relays supplied by installer. For alternate zone wiring using a zone controller, see manufacturers instructions.

BOILER

- A boiler circulator is factory installed inside the boiler.
- Follow all instructions in this manual for piping boiler and system.

EXPRESS Setup — Typical Application A (cont.)

See Legend on page 18 for Item number identification.

Master Boiler – Field Wiring

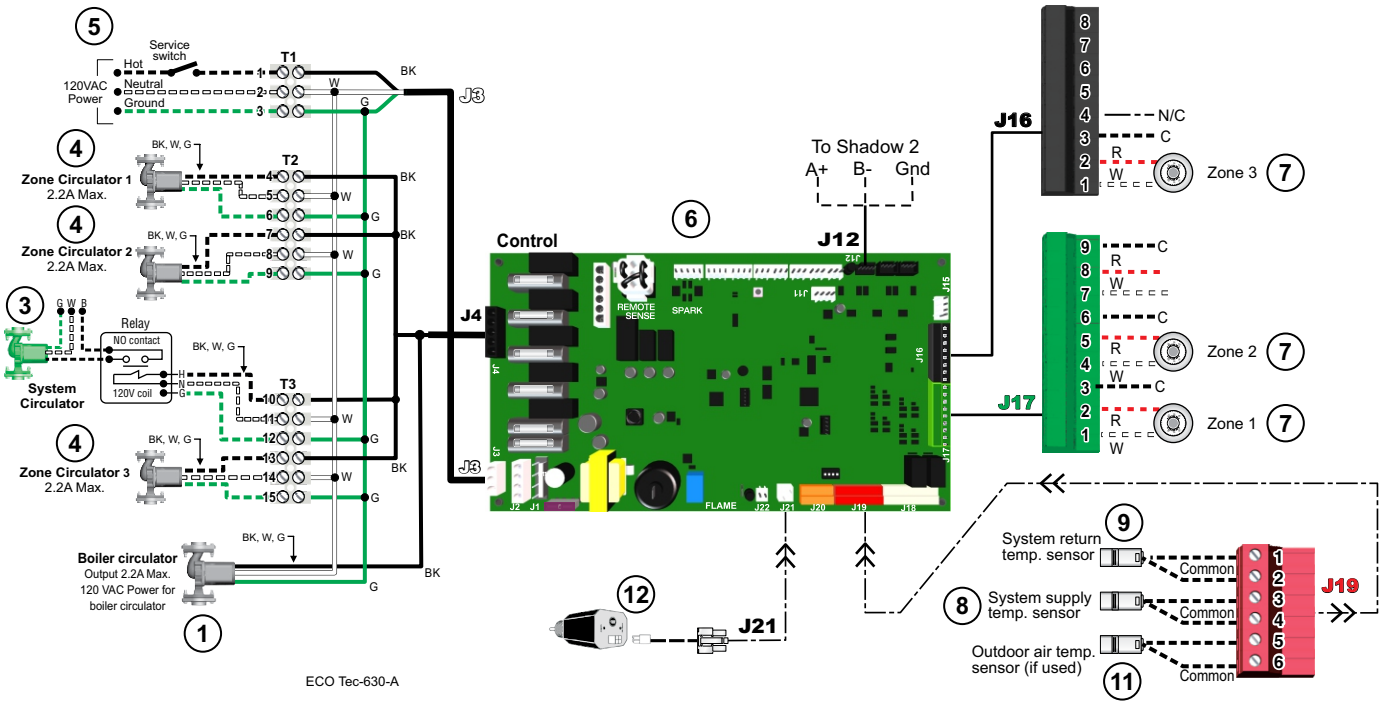

Shadow 2 Boiler – Field Wiring

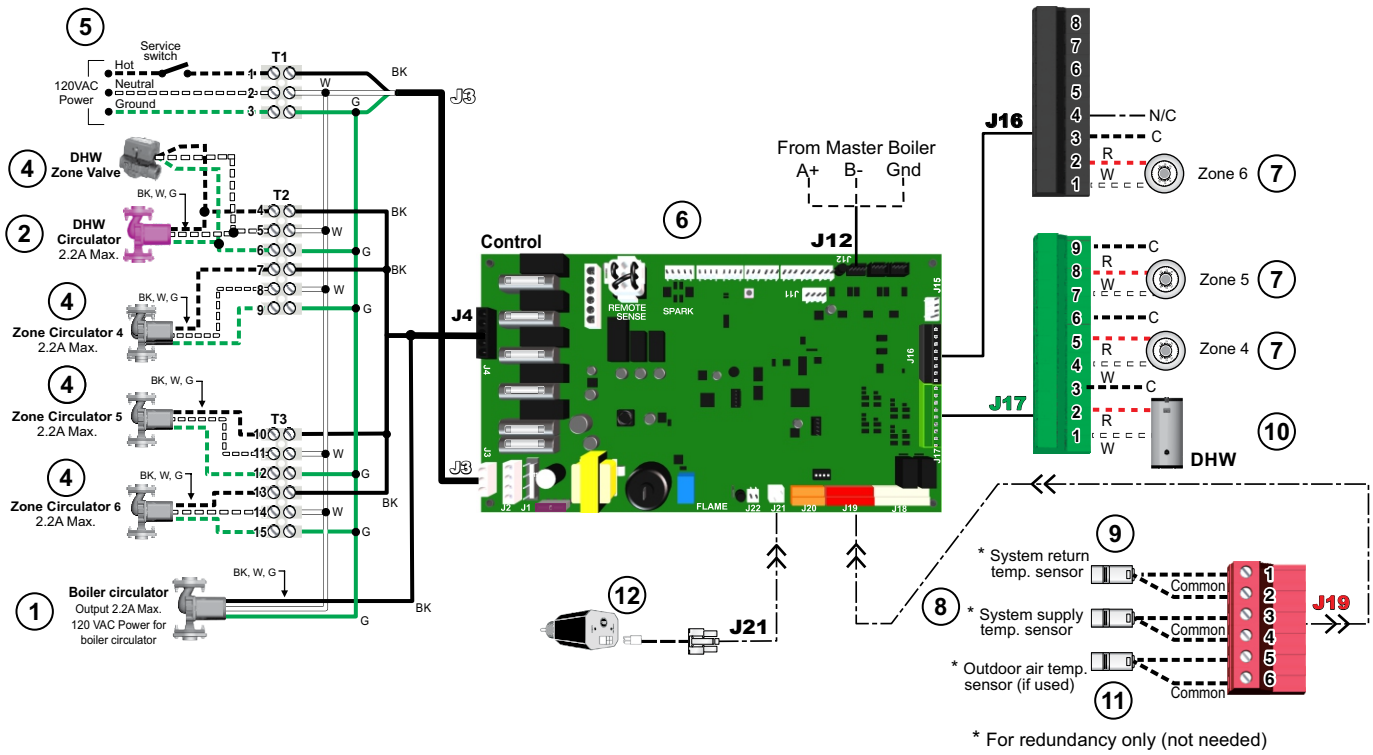

* For redundancy only (not needed)

EXPRESS Setup — Typical Application A (cont.)

WARNING **Boiler Model, Altitude and Fuel Type are critical settings.** Failure to set correctly could result in severe personal injury, death or substantial property damage.

Figure 10 Typical Application A — multiple boiler system — **ECO Tec Heating Only** boilers — setup requirements (parameters not listed below can be left at factory default settings unless special needs indicate different settings).

SETUP FOR Figure 9, page 17 AS SHOWN (DHW directly connected)

Boiler Wiring and Control Settings (See Figure 9, page 17 for items referenced)

Boiler ID	TT input	Wired from:	Input Assignment	Aux Option	Output	Wired to: ***
1 Master	1	Zone 1 Tstat	Priority 2 - Network 1	N/A	1	Zone 1 Circ/Valve
	2	Zone 2 Tstat	Priority 2 - Network 1	N/A	2	Zone 2 Circ/Valve
	3	No Wire	Aux Pump/Output *	Any TT Input By It's Priority Settings	3	System Circ Relay *
	4	Zone 3 Tstat	Priority 2 - Network 1	N/A		Zone 3 Circ/Valve
2 Shadow	1	DHW Aquastat	Priority 1 - Local 1	N/A	1	DHW Circ.
	2	Zone 4 Tstat	Priority 2 - Network 1	N/A	2	Zone 4 Circ/Valve
	3	Zone 5 Tstat	Priority 2 - Network 1	N/A	3	Zone 5 Circ/Valve
	4	Zone 6 Tstat	Priority 2 - Network 1	N/A	4	Zone 6 Circ/Valve

* System circulator will not be used if system is circulator zoned. Aux Pump/Output would not be required. An additional Zone Circ. could be used here, instead.

Priority Settings

Priority #	Setting	Value	Priority #	Setting	Value
Priority 1 – Local 1 (Boiler 2 only)	System Type	DHW	Priority 2 – Network 1 (Boiler 1 only)	System Type	Select heating system type
	Run Blr Pump	YES +		Run Blr Pump	YES +
	Run Aux Output	NO		Run Aux Output	YES

*** Outputs are 120 VAC maximum 2.2 amps. Use relay for other voltages or higher amperages.
+ Cannot be changed.

EXPRESS Setup — Typical Application B

Figure 11 Typical Application B — Piping layout — typical piping for multiple **ECO Tec Heating Only** boilers, with DHW storage heaters (4-boiler system) (adjust boiler connections as required for other boiler models)

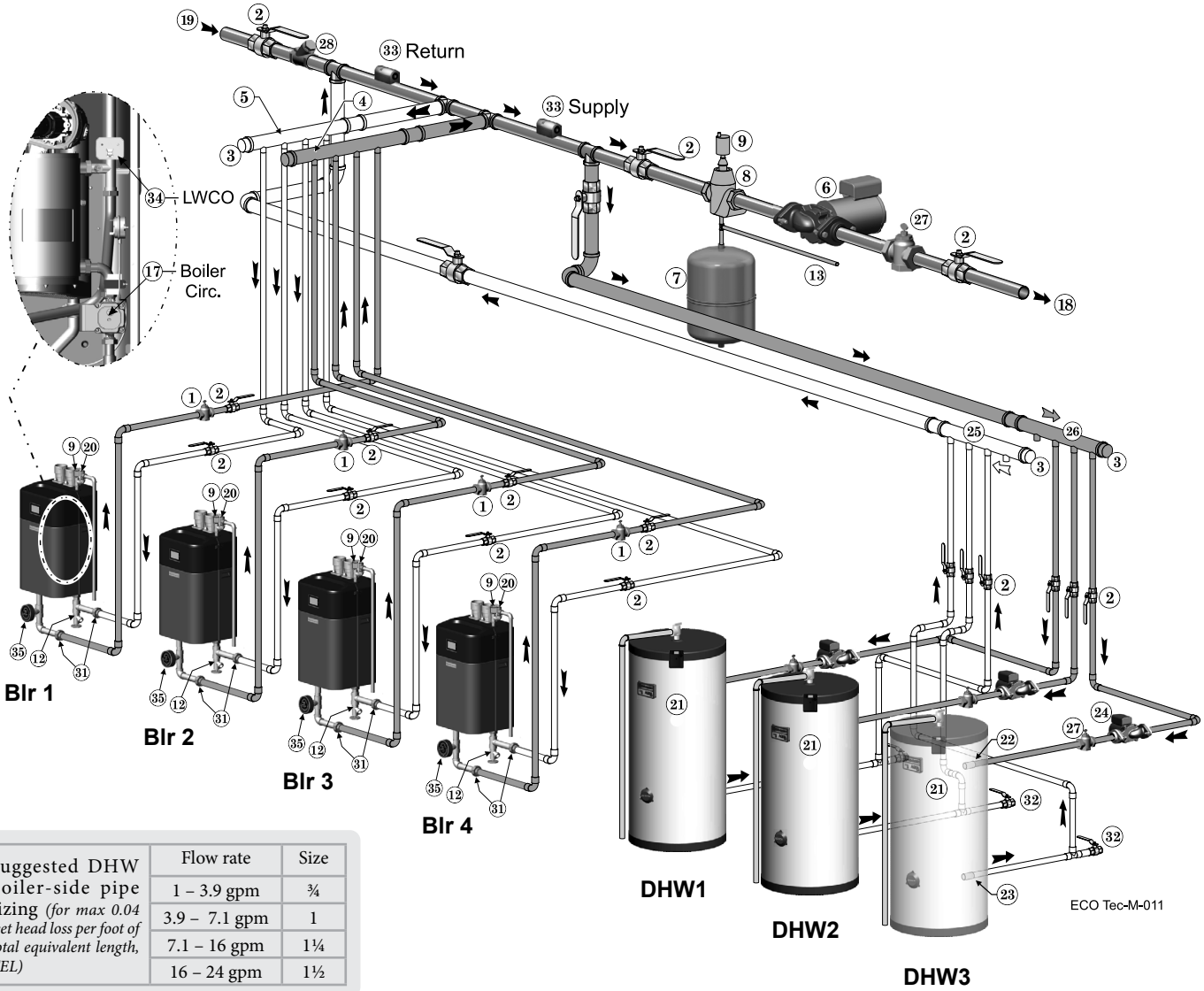

Suggested DHW boiler-side pipe sizing *(for max 0.04 feet head loss per foot of total equivalent length, TEL)*	Flow rate	Size
	1 – 3.9 gpm	¾
	3.9 – 7.1 gpm	1
	7.1 – 16 gpm	1¼
	16 – 24 gpm	1½

Legend — Figure 11

1 Flow/check or spring check valve.
2 Isolation valves (when used).
3 Caps.
4 Easy-Fit® Manifold (supply) — layout and size per page 8.
5 Easy-Fit® Manifold (return) — layout and size per page 8.
6 System circulator (not used if system is circulator zoned).
7 Expansion tank (diaphragm type).
8 System air eliminator.
9 Automatic air vent.
12 Boiler drain valve
13 Cold water supply (per applicable codes).
17 Boiler circulator — circulates water between boiler and Easy-Fit® Manifolds (Factory installed inside the boiler).
18 System supply.
19 System return.
20 Boiler relief valve and discharge piping, installed per **ECO Tec** boiler manual.
21 Indirect-fired storage water heaters (Weil-McLain Aqua Plus Line shown) — Example is shown with each water heater having its own circulator. Alternate: reverse-return boiler-side piping using a single circulator.
22 DHW boiler water supply, typical.
23 DHW boiler water return, typical.
24 DHW boiler-side circulators.
25 DHW boiler-side supply Easy-Fit® Manifold.
26 DHW boiler-side return Easy-Fit® Manifold.
27 Flow/check or spring check valves (to prevent induced or gravity flow in heating system or DHW piping).
28 Check valve.
29 See water heater manual for DHW piping — The boiler-side piping in this example uses a separate circulator for each DHW tank.
31 Unions (Recommended).
32 Drain valves for DHW boiler water piping.
33 Strap system supply and return sensors to lines as shown, at least 6 pipe diameters (but no more than 3 feet) from boiler connection tees. For redundancy, you can install multiple sensors, each connected to a different boiler.
34 Low water cutoff (Recommended to install internally to boiler).
35 Pressure/Temperature gauge.

NOTICE **This piping is suggested only. The layout above can be controlled with the boiler control's multi-boiler function, DHW priority or by an external control that provides multiple boiler heating and DHW priorities. This will provide domestic priority by disabling the heating system circulator any time there is a DHW call for heat. The boiler circulators, item 17, must operate on any call for heat, whether heating system or DHW. Offset the DHW boiler-side supply and return manifolds as shown so the total run of pipe and fittings to each of the water heaters is approximately equal.**

EXPRESS Setup — Typical Application B (cont.)

Purpose

- Space heating with multiple zones using system pump or zone pumps.
- DHW connected to primary with a secondary connection. Multiple DHW tanks are zoned with circulators.
- DHW priority— space heating is discontinued during call for heat from water heater(s).

Control setting notes

- See the tables in Figure 12, page 25 for required and optional settings.
- The table follows the general setup required to achieve the shown systems with shown priorities.
- Settings can be made using the WIZARD or by following instructions elsewhere in this manual to enter the settings manually.

NOTICE **Alternate piping: DHW circuit piped elsewhere in system —** If the DHW circuit is piped elsewhere in the system, the above settings will work only if the System Pump is activated during DHW calls for heat. To set the control for this, set PRIORITY 2 — NETWORK 1 with RUN AUX PUMP/ OUTPUT set to YES instead of NO.

Circulators and piping

⚠WARNING Provide an external relay and external power to any circulator if its load rating exceeds 2.2 amps or 16.4 amps in rush.

- Piping must be primary/secondary as shown, with the boiler piped in a secondary loop and the DHW piped in a secondary loop with connections spanning the boiler connections.
- DHW circulators supplied by installer. Size circulators for required flow.
- Control settings in Figure 12, page 25 provide DHW priority— space heating is discontinued during call for DHW.
- Zone circulators and relays supplied by installer. For alternate zone wiring using a zone controller, see page 48.

EXPRESS Setup — Typical Application B (cont.)

See Legend on page 18 for Item number identification.

Master Boiler – Field Wiring

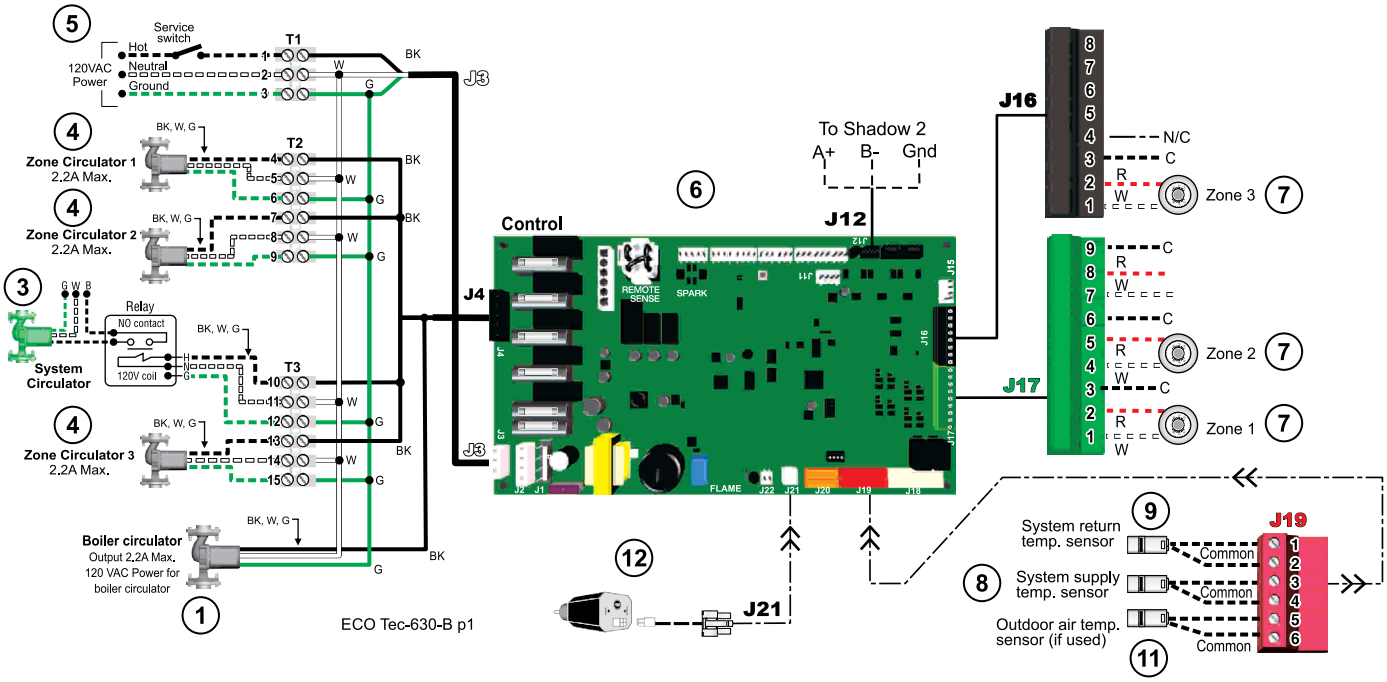

Shadow 2 Boiler – Field Wiring

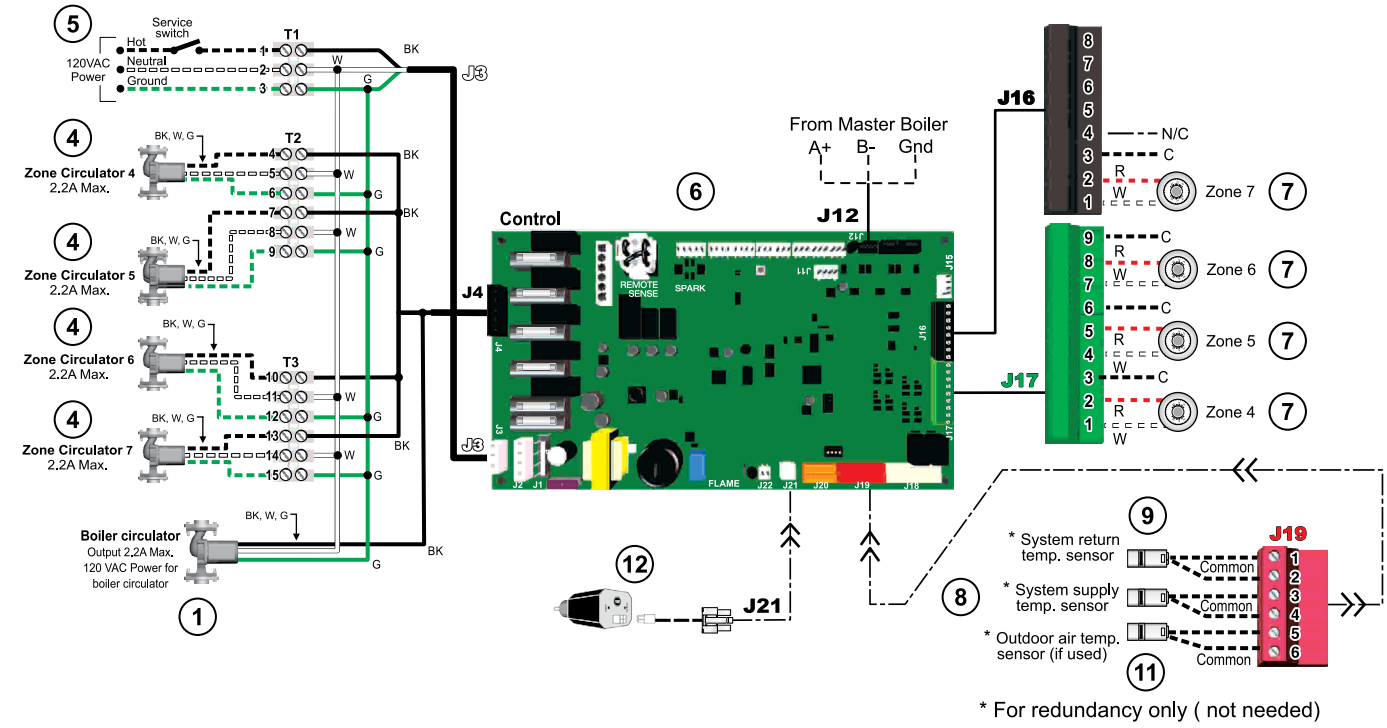

See next page for Shadow boilers 3 & 4.

EXPRESS Setup — Typical Application B (cont.)

See Legend on page 18 for Item number identification.

Shadow 3 Boiler – Field Wiring

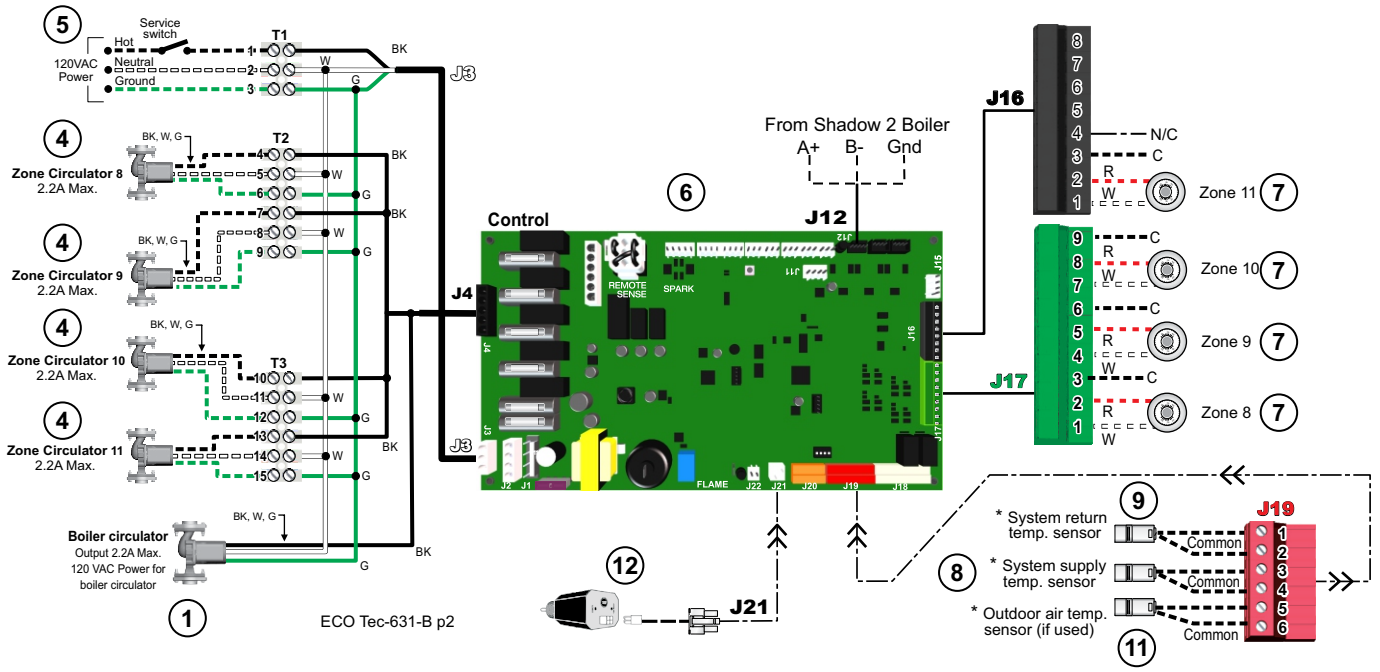

* For redundancy only (not needed)

Shadow 4 Boiler – Field Wiring

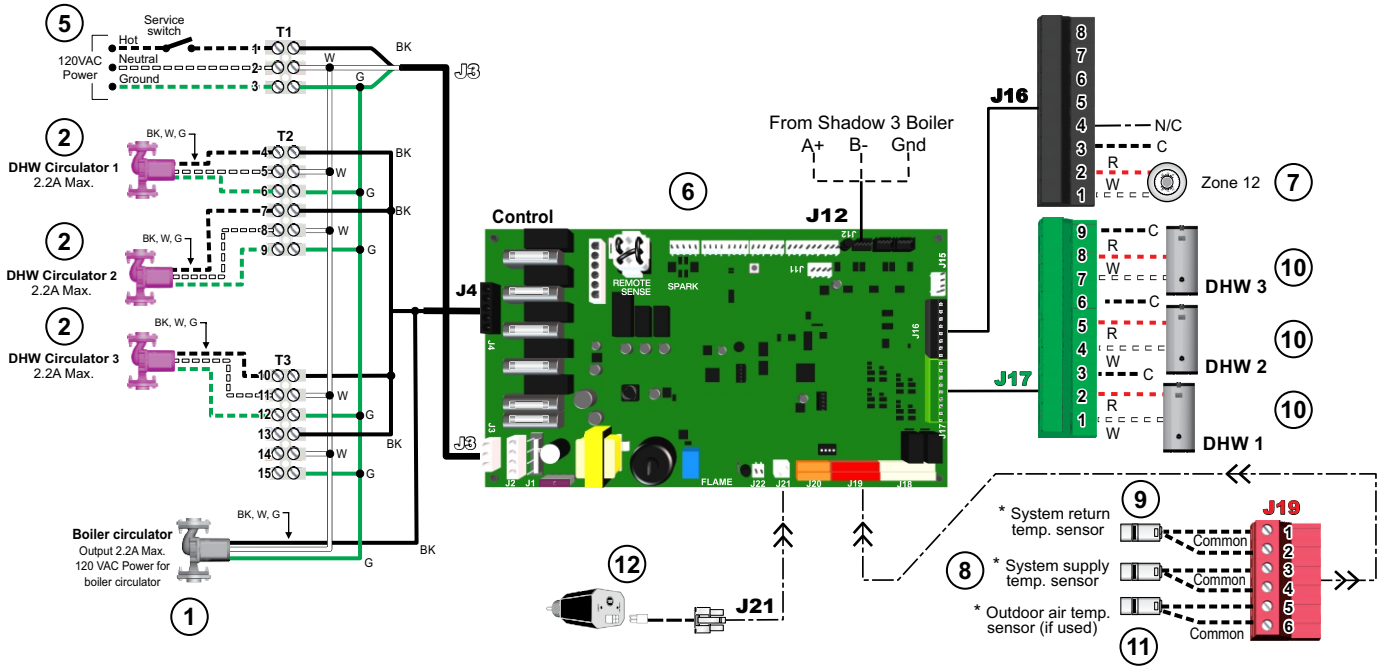

* For redundancy only (not needed)

EXPRESS Setup — Typical Application B (cont.)

WARNING **Boiler Model, Altitude and Fuel Type are critical settings.** Failure to set correctly could result in severe personal injury, death or substantial property damage.

Figure 12 Typical Application B — multiple boiler system **ECO Tec Heating Only** boilers— setup requirements (parameters not listed below can be left at factory default settings unless special needs indicate different settings)

Boiler Wiring and Control Settings (See Figure 11, page 21 for items referenced)

Boiler ID	TT input	Wired from:	Input Assignment	Aux Option	Output	Wired to: ***
1 Master	1	Zone 1 Tstat	Priority 3 - Network 2	N/A	1	Zone 1 Circ/Valve
	2	Zone 2 Tstat	Priority 3 - Network 2	N/A	2	Zone 2 Circ/Valve
	3	No Wire	Aux Pump/Output **	Any TT Input By It's Priority Settings	3	System Circ **
	4	Zone 3 Tstat	Priority 3 - Network 2	N/A	4	Zone 3 Circ/Valve
2 Shadow	1	Zone 4 Tstat	Priority 3 - Network 2	N/A	1	Zone 4 Circ/Valve
	2	Zone 5 Tstat	Priority 3 - Network 2	N/A	2	Zone 5 Circ/Valve
	3	Zone 6 Tstat	Priority 3 - Network 2	N/A	3	Zone 6 Circ/Valve
	4	Zone 7 Tstat	Priority 3 - Network 2	N/A	4	Zone 7 Circ/Valve
3 Shadow	1	Zone 8 Tstat	Priority 3 - Network 2	N/A	1	Zone 8 Circ/Valve
	2	Zone 9 Tstat	Priority 3 - Network 2	N/A	2	Zone 9 Circ/Valve
	3	Zone 10 Tstat	Priority 3 - Network 2	N/A	3	Zone 10 Circ/Valve
	4	Zone 11 Tstat	Priority 3 - Network 2	N/A	4	Zone 11 Circ/Valve
4 Shadow	1	DHW1 Aquastat	Priority 2 - Network 1	N/A	1	DHW 1 Circ
	2	DHW2 Aquastat	Priority 2 - Network 1	N/A	2	DHW 2 Circ
	3	DHW3 Aquastat	Priority 2 - Network 1	N/A	3	DHW 3 Circ
	4	Zone 12 Tstat	Priority 3 - Network 2	N/A	4	Zone 12 Circ/Valve

** System circulator will not be used if system is circulator zoned. Aux Pump/Output would not be required. An additional Zone CIRC. could be used here, instead.
*** Outputs are 120 VAC maximum 2.2 amps. Use relay for other voltages or higher amperages.

Priority Settings

Priority #	Setting	Value	Priority #	Setting	Value
Priority 2 – Network 1	System Type	DHW	Priority 3 – Network 2	System Type	Select heating system type
	Run Blr Pump	YES +		Run Blr Pump	YES +
	Run Aux Output	NO		Run Aux Output	YES
	Min Blrs *	Select as needed for quick response	N/A	N/A	N/A

* Min Blrs setting is accessible in the Priority menus (see Figure 38, page 68).

\+ Cannot be changed.

EXPRESS Setup — Typical Application C

Figure 13 Typical Application C — Piping layout — typical piping for multiple **ECO Tec Heating Only** boilers, using isolation exchanger (adjust boiler connections as required for other boiler models)

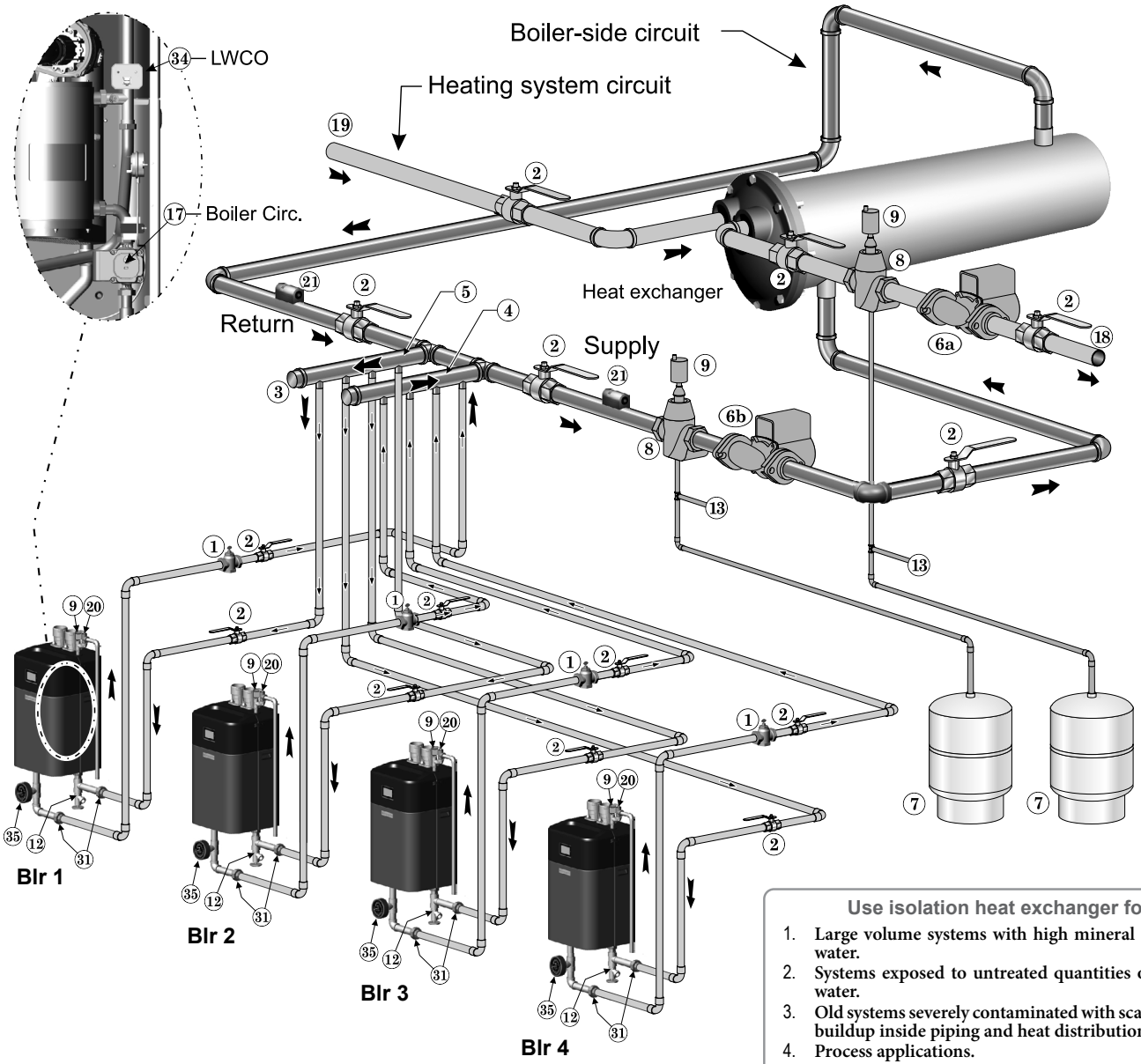

Use isolation heat exchanger for:

1. **Large volume systems with high mineral content in water.**
2. **Systems exposed to untreated quantities of makeup water.**
3. **Old systems severely contaminated with scale and rust buildup inside piping and heat distribution units.**
4. **Process applications.**
5. **Commercial service water applications.**
6. **High water pressure applications, requiring pressure relief setting in heating system more than 50 PSIG (tall buildings). See notes below.**

NOTICE **Heat exchanger type —** This illustration shows a shell and tube exchanger. Other exchanger types may be used if suitable for the system water conditions.

Legend — Figure 13

1 Flow/check or spring check valve. 2 Isolation valves (when used). 3 Cap. 4 Easy-Fit® Manifold (supply) — layout and size per page 8. 5 Easy-Fit® Manifold (return) — layout and size per page 8. 6a Heating system circulator (exchanger tube-side). 6b Heat exchanger shell-side circulator 7 Expansion tanks (diaphragm type). 8 System air eliminator. 9 System automatic air vent. 12 Boiler drain valves.	13 Cold water supply connections (per applicable codes). 17 Boiler circulator — circulates water between boiler and Easy-Fit® Manifolds (Factory installed inside the boiler). 18 Heating system supply. 19 Heating system return. 20 Boiler relief valve and discharge piping, installed per **ECO Tec** boiler manual. 21 Strap system supply and return sensors to lines as shown, at least 6 pipe diameters (but no more than 3 feet) from boiler connection tees. For redundancy, you can install multiple sensors, each connected to a different boiler. 31 Unions (Recommended). 34 Low water cutoff (Recommended to install internally to boiler). 35 Pressure/Temperature gauge	Notes: 1. Contact heat exchanger manufacturer for heat exchanger shell-side and tube-side piping and circulator requirements. Tube-side flow and temperatures must meet heating system requirements. 2. Contact heat exchanger manufacturer for sizing heat exchanger. 3. Heat exchanger shell-side circuit requires its own expansion tank as shown. 4. Heating system circuit requires its own expansion tank, as shown, plus its own relief valve set to protect heating system and heat exchanger piping and components. 5. When individual isolation valves are used, individual boiler and level controls may be required.

EXPRESS Setup — Typical Application C (cont.)

See Legend on page 18 for Item number identification.

Master Boiler – Field Wiring

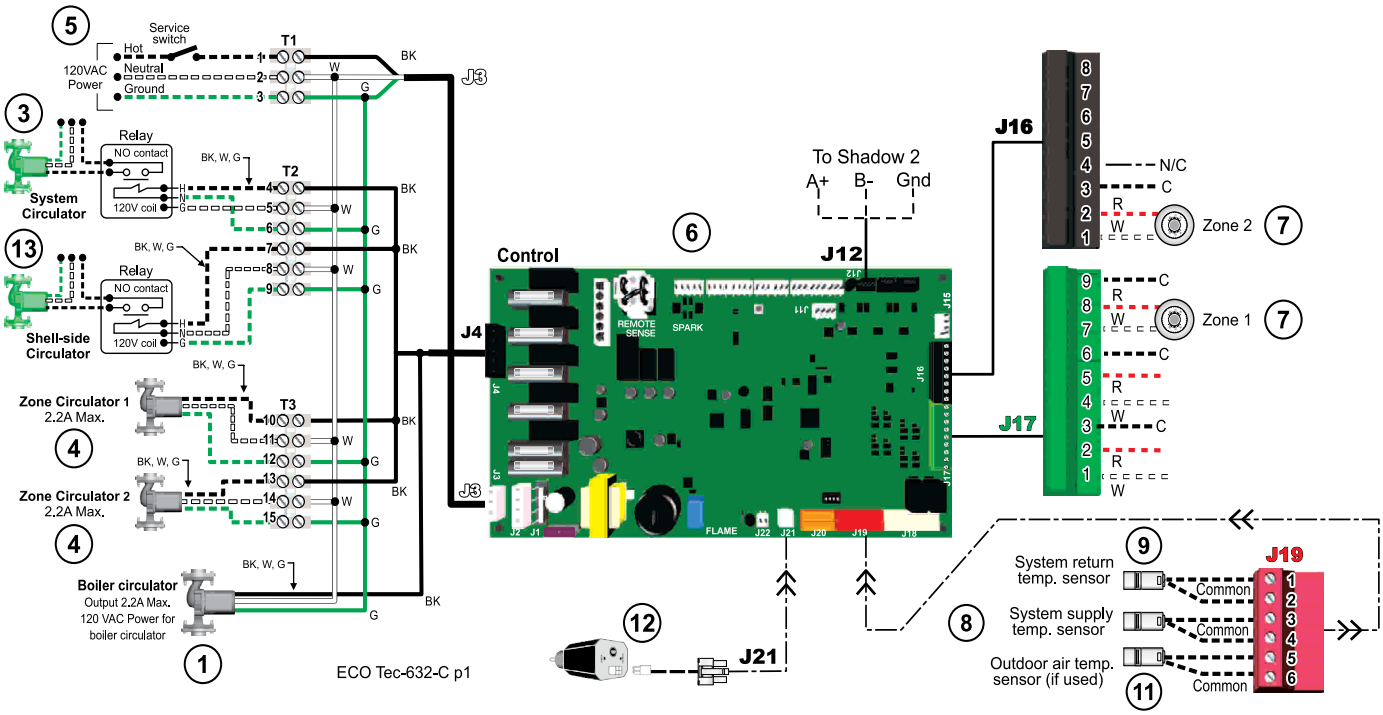

Shadow 2 Boiler – Field Wiring

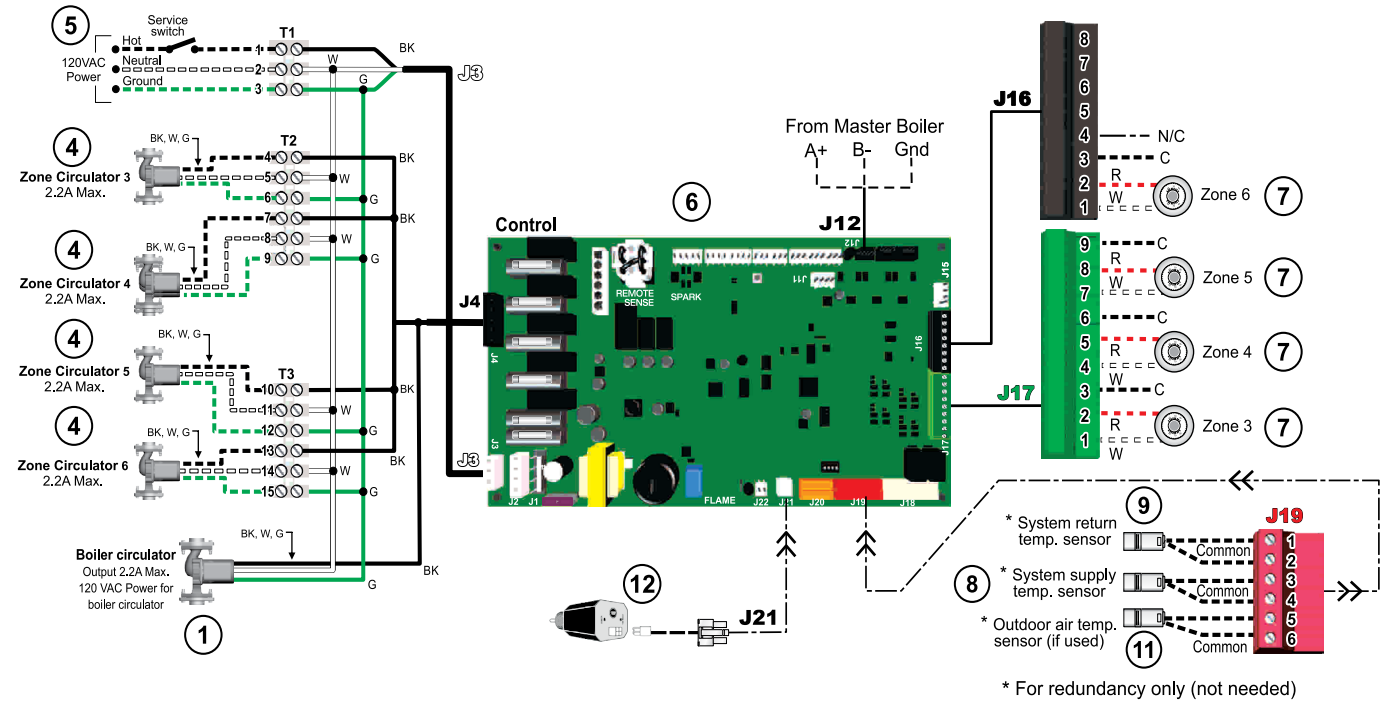

See next page for Shadow boilers 3 & 4.

EXPRESS Setup — Typical Application C (cont.)

See Legend on page 18 for Item number identification.

Shadow 3 Boiler – Field Wiring

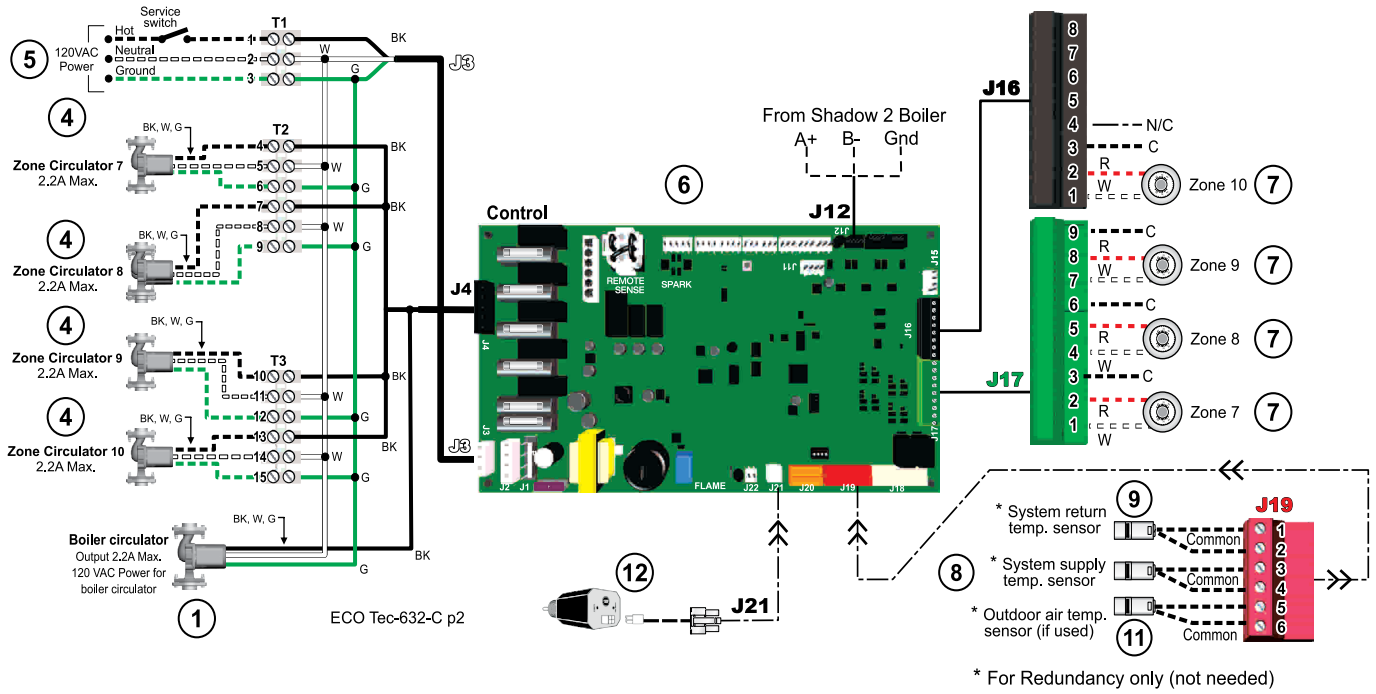

Shadow 4 Boiler – Field Wiring

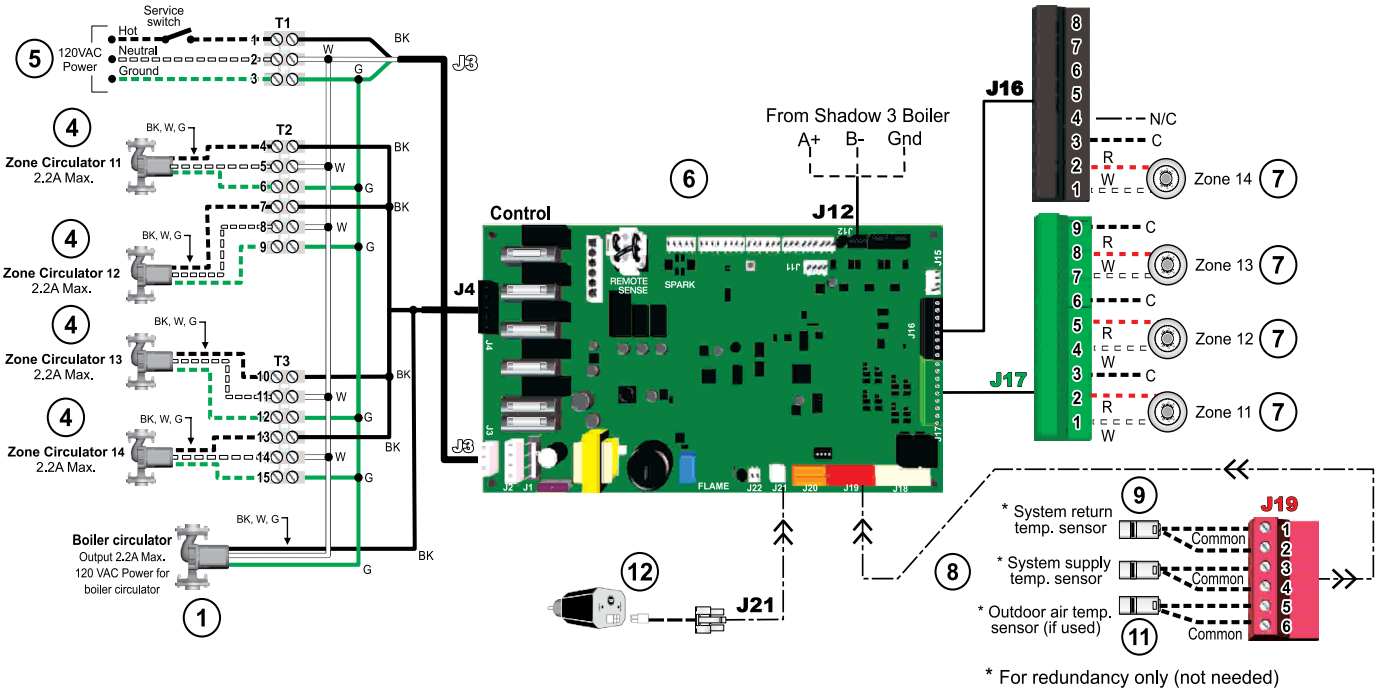

EXPRESS Setup — Typical Application C (cont.)

WARNING **Boiler Model, Altitude and Fuel Type are critical settings.** Failure to set correctly could result in severe personal injury, death or substantial property damage.

Purpose

- Isolation heat exchanger for applications with high system pressure (over 50 PSIG), such as tall buildings. Typical application shown with shell and tube heat exchanger provided by installer. Boiler maximum allowable pressure is 50 PSIG. Space heating provided by hot water supply of heat exchanger to terminal units.
- System circulator and shell-side circulator are activated on call for heat by the heating system.
- DHW system not shown.

Control setting notes

- See the table in Figure 14 for required and optional settings.
- The table follows the general setup required to achieve the shown systems with shown priorities.
- Settings can be made using the WIZARD or by following instructions elsewhere in this manual to enter the settings manually.

Figure 14 Typical Application C — multiple boiler system **ECO Tec Heating Only** boilers — setup requirements (parameters not listed below can be left at factory default settings unless special needs indicate different settings)

Boiler Wiring and Control Settings (See Figure 13, page 26 for items referenced)

Boiler ID	TT input	Wired from:	Input Assignment	Aux Option	Output	Wired to: ***
1 Master	1	No Wire	Aux Pump/Output **	Any TT Input By It's Priority Settings **	1	System Circ
	2	No Wire	Aux Pump/Output	Any TT Input By It's Priority Settings	2	Shell-side Circ
	3	Zone 1 Tstat	Priority 2 - Network 1	N/A	3	Zone 1 Circ/Valve
	4	Zone 2 Tstat	Priority 2 - Network 1	N/A	4	Zone 2 Circ/Valve
2 Shadow	1	Zone 3 Tstat	Priority 2 - Network 1	N/A	1	Zone 3 Circ/Valve
	2	Zone 4 Tstat	Priority 2 - Network 1	N/A	2	Zone 4 Circ/Valve
	3	Zone 5 Tstat	Priority 2 - Network 1	N/A	3	Zone 5 Circ/Valve
	4	Zone 6 Tstat	Priority 2 - Network 1	N/A	4	Zone 6 Circ/Valve
3 Shadow	1	Zone 7 Tstat	Priority 2 - Network 1	N/A	1	Zone 7 Circ/Valve
	2	Zone 8 Tstat	Priority 2 - Network 1	N/A	2	Zone 8 Circ/Valve
	3	Zone 9 Tstat	Priority 2 - Network 1	N/A	3	Zone 9 Circ/Valve
	4	Zone 10 Tstat	Priority 2 - Network 1	N/A	4	Zone 10 Circ/Valve
4 Shadow	1	Zone 11 Tstat	Priority 2 - Network 1	N/A	1	Zone 11 Circ/Valve
	2	Zone 12 Tstat	Priority 2 - Network 1	N/A	2	Zone 12 Circ/Valve
	3	Zone 13 Tstat	Priority 2 - Network 1	N/A	3	Zone 13 Circ/Valve
	4	Zone 14 Tstat	Priority 2 - Network 1	N/A	4	Zone 14 Circ/Valve

** System circulator will not be used if system is circulator zoned. Aux Pump/Output would not be required. An additional Zone CIRC. could be used here, instead.
*** Outputs are 120 VAC maximum 2.2 amps. Use relay for other voltages or higher amperages.

Priority Settings

Priority #	Setting	Value	Priority #	Setting	Value
Priority 2 – Network 1	System Type	Select System Type	N/A	N/A	N/A
	Run Blr Pump	YES +	N/A	N/A	N/A
	Run Aux Output	YES	N/A	N/A	N/A

+ Cannot be changed.

Circulators and piping

WARNING Provide an external relay and external power to any circulator if its load rating exceeds 2.2 amps FLA, 3.6 amps locked rotor, or 16.4 amps in rush.

- Piping must be primary/secondary as shown, with the boiler piped in a secondary loop.
- Size circulators for required flow.
- Zone circulators and relays supplied by installer. For alternate zone wiring using a zone controller, see page 48.

EXPRESS Setup — Typical Application D

Figure 15 Typical Application D — Piping layout — typical piping for multiple **ECO Tec Combi and Heating Only** boilers, (adjust boiler connections as required for other boiler models)

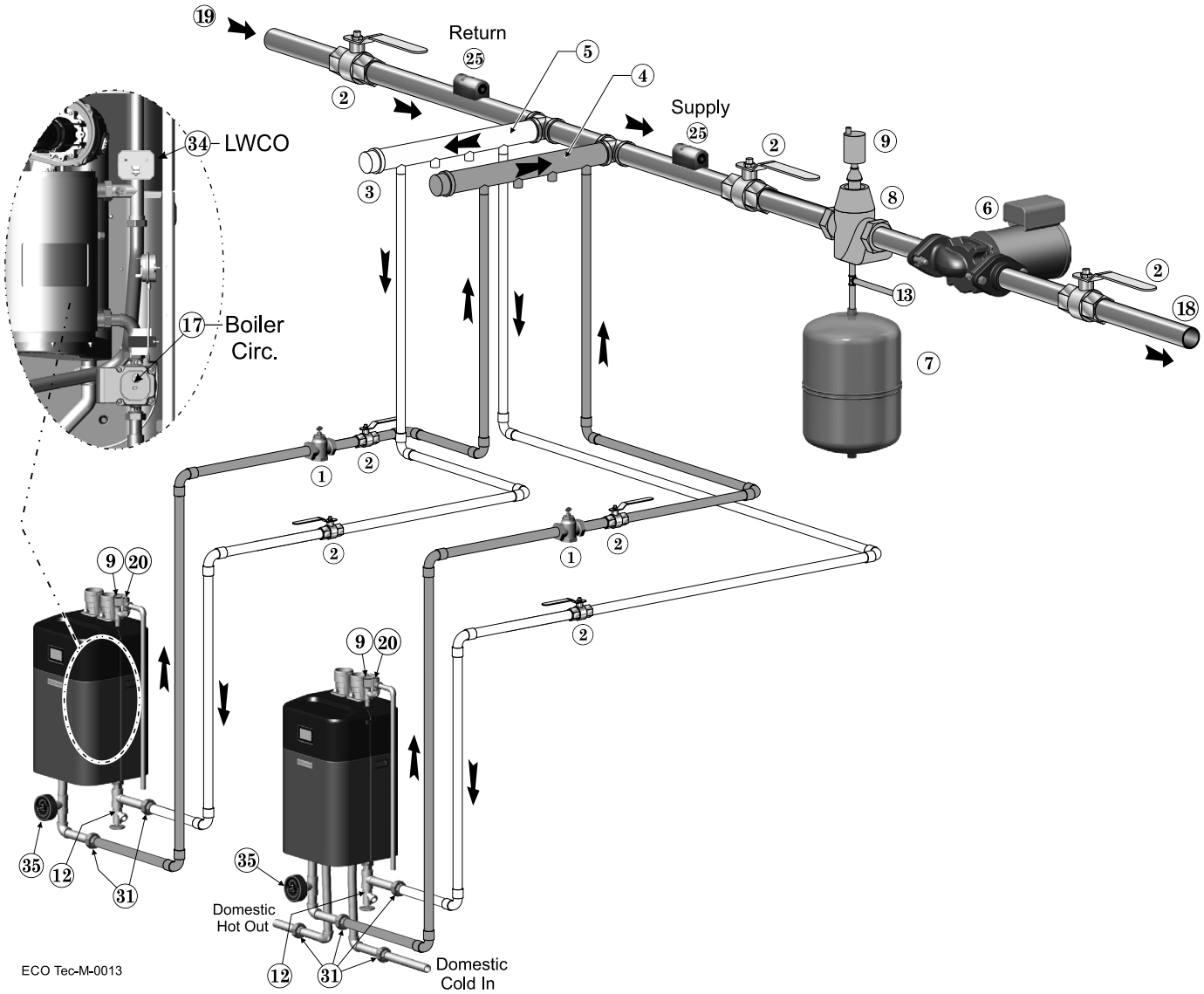

Legend — Figure 15

1 Flow/check or spring check valve.	19 System return.
2 Isolation valves (when used).	20 Boiler relief valve and discharge piping, installed per **ECO Tec** boiler manual.
3 Caps.	21 Indirect-fired storage water heaters (Weil-McLain Aqua Plus Line shown) — Example is shown connected to one boiler of the system. Setup is shown on the next page for this configuration and also for the option of a DHW tank installed as a system zone.
4 Easy-Fit® Manifold (supply) — layout and size per page 8.	22 DHW boiler water supply, typical.
5 Easy-Fit® Manifold (return) — layout and size per page 8.	23 DHW boiler water return, typical.
6 System circulator. (not used if system is circulator zoned)	24 DHW boiler-side circulator and flow/check valve.
7 Expansion tank (diaphragm type).	25 Strap system supply and return sensors to lines as shown, at least 6 pipe diameters (but no more than 3 feet) from boiler connection tees. For redundancy, you can install a supply and return sensor connected to each boiler.
8 System air eliminator.	31 Unions (Recommended).
9 Automatic air vent.	34 Low water cutoff (Recommended to install internally to boiler).
12 Boiler drain valves.	35 Pressure/Temperature gauge.
13 Cold water supply (per applicable codes).	
17 Boiler circulator — circulates water between boiler and Easy-Fit® Manifolds (Factory installed inside the boiler).	
18 System supply.	

EXPRESS Setup — Typical Application D (cont.)

See Legend on page 18 for Item number identification.

Master Boiler – Field Wiring (Heating Only Model)

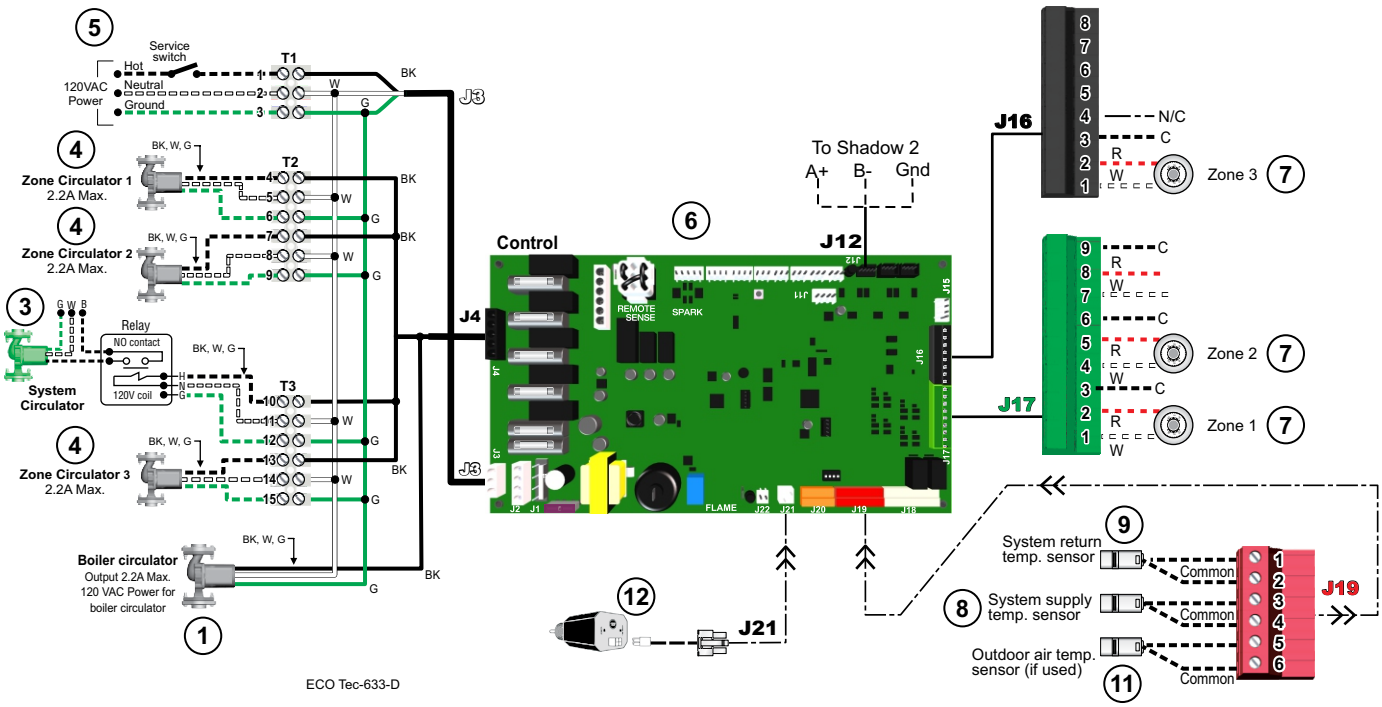

Shadow 2 Boiler – Field Wiring (Combi Model)

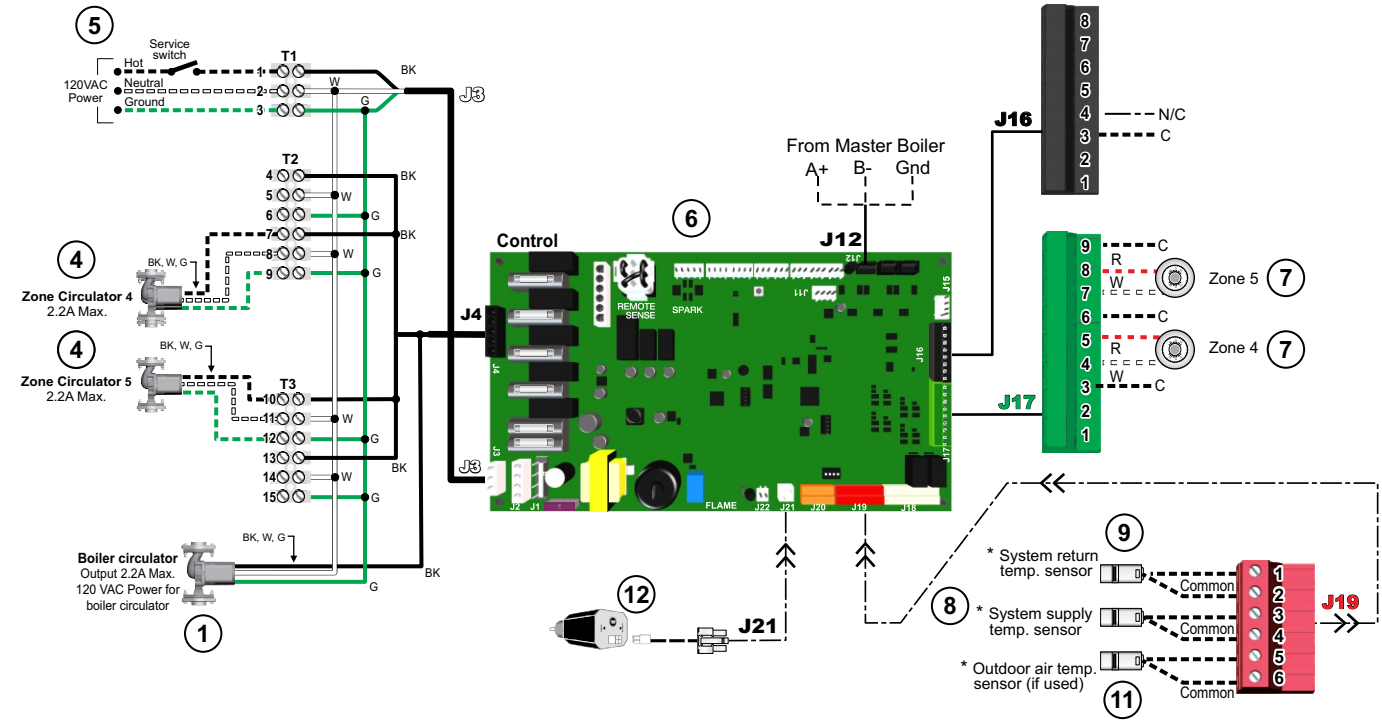

* For redundancy only (not needed)

EXPRESS Setup — Typical Application D (cont.)

WARNING **Boiler Model, Altitude and Fuel Type are critical settings.** Failure to set correctly could result in severe personal injury, death or substantial property damage.

Figure 16 Typical Application D — multiple boiler system — (**Combi & Heating Only Boilers**) — setup requirements (parameters not listed below can be left at factory default settings unless special needs indicate different settings)

SETUP FOR Figure 15, page 30 AS SHOWN

Boiler Wiring and Control Settings (See Figure 9, page 17 for items referenced)

Boiler ID	TT input	Wired from:	Input Assignment	Aux Option	Output	Wired to: ***
1 Master	1	Zone 1 Tstat	Priority 2 - Network 1	N/A	1	Zone 1 Circ/Valve
	2	Zone 2 Tstat	Priority 2 - Network 1	N/A	2	Zone 2 Circ/Valve
	3	No Wire	Aux Pump/Output *	Any TT Input By It's Priority Settings	3	System Circ Relay *
	4	Zone 3 Tstat	Priority 2 - Network 1	N/A	4	Zone 3 Circ/Valve
2 Shadow	1	Combi	Combi	N/A	1	3 way valve
	2	Zone 4 Tstat	Priority 2 - Network 1	N/A	2	Zone 4 Circ/Valve
	3	Zone 5 Tstat	Priority 2 - Network 1	N/A	3	Zone 5 Circ/Valve
	4	N/A	N/A	N/A	4	3 way valve

* System circulator will not be used if system is circulator zoned. Aux Pump/Output would not be required. An additional Zone Circ. could be used here, instead.

Priority Settings

Priority #	Setting	Value	Priority #	Setting	Value
Priority 1 – Local 1 (Boiler 2 only)	System Type	Combi-DHW	Priority 2 – Network 1 (Boiler 1 only)	System Type	Select heating system type
	Run Blr Pump	YES +		Run Blr Pump	YES +
	Run Aux Output	NO		Run Aux Output	YES

*** Outputs are 120 VAC maximum 2.2 amps. Use relay for other voltages or higher amperages.
\+ Cannot be changed.

Purpose

- Space heating with multiple zones using system pump or zone pumps.
- DHW using Combi Boiler as one of the boilers in a multiple boiler system (as shown in Shadow boiler, page 31). Cannot combine multiple Combi Boiler's DHW piping circuits together.
- DHW priority — on Combi boiler only. Heating only boiler may work for space heating during DHW call.

Control setting notes

- See the table above for required and optional settings.
- The table follows the general setup required to achieve the shown systems with shown priorities.
- Settings can be made using the WIZARD or by following instructions elsewhere in this manual to enter the settings manually.

Circulators and piping

WARNING Provide an external relay and external power to any circulator if its load rating exceeds 2.2 amps FLA, 3.6 amps locked rotor, or 16.4 amps in rush.

- Piping must be primary/secondary as shown.
- DHW and components must be installed per the **ECO Tec** boiler manual in section Install boiler water piping – Domestic Water Piping – Combi boiler.

BOILER

- Boiler circulator is installed internally within the boiler.
- Follow all instructions in this manual for piping boiler and system.

Field wiring (see wiring diagram, Figure 18, page 44)

WARNING **ELECTRICAL SHOCK HAZARD** — For your safety, turn off electrical power supply at service entrance panel before making any electrical connections to avoid possible electric shock hazard. Failure to do so can cause severe personal injury or death.

NOTICE Wiring must be NEC Class 1. If original wiring as supplied with boiler must be replaced, use only type 105 °C wire or equivalent. Boiler must be electrically grounded as required by National Electrical Code ANSI/NFPA 70 – latest edition, and/or the Canadian Electrical Code Part I, CSA C22.1, Electrical Code.

NOTICE The installation must comply with: National Electrical Code and any other national, state, provincial or local codes or regulations. In Canada, CSA C22.1 Canadian Electrical Code Part 1, and any local codes.

NOTICE The boiler when installed, must be electrically bonded to ground in accordance with the requirements of the authority having jurisdiction or, in the absence of such requirements, with the National Electrical Code, ANSI/NFPA 70 – latest edition, and/or the Canadian Electrical Code Part I, CSA C22.1, Electrical Code.

Boiler wiring

Connecting terminals

All low voltage field wiring is made directly to the corresponding terminal blocks on the circuit board.
Low voltage, 24VAC, terminals are on the right side and right bottom of the circuit board.
Line voltage, pump, and /or AUX, 120VAC, terminal strips are on the bottom of boiler inside the High voltage junction box.

Wiring overview

See details on the following pages for the wiring connections out lined below:

Required wiring connections

- 120VAC power to boiler; 120VAC power out to boiler circulator and outdoor temperature sensor (unless exempt as described in this manual).
- Low water cut-off.
- ODT – The Outdoor sensor must be installed unless specifically exempted in the Energy Act statement on page 2.

Connections as needed by systems

- Thermostat, end switch or other inputs for call for heat.
- System zone circulators, valves, relays, etc.
- System circulator, when required.
- System supply and return temperature sensors required for primary/secondary piping systems.

Optional wiring connections

- External limits; proof-of-closure interlocks (combustion air damper, flow switch, etc.); 0–10VDC for target or modulation control; remote alarm; additional heat demand contact; and communication cables for building management system interface (MODBUS -sold separately).

Wire entrances (see next page)

Wire entrance knockouts are provided on the top right, the bottom middle and the bottom right of the boiler cabinet:

1. Line voltage— five (5) knockouts on the bottom middle of the cabinet (Line In, Output 1, 2, 3, 4). Outputs 1 & 4 not used for combi models.
2. Low voltage— three (3) knockouts on the bottom right side of the cabinet and one (1) knockout on the top right, (Use one of these knockouts for BMS and multi-boiler communication wiring).

WARNING Installer MUST use a strain relief through jacket knockouts. Failure to do so can cause severe personal injury, death or substantial property damage.

WARNING Installer MUST SEAL all electrical entrances using a sealed strain relief or a strain relief sealed with duct seal putty or silicone. Sealing the entrances prevents the boiler from drawing air from inside the boiler room. This is particularly important if the boiler is located in the same room as other gas appliances. Failure to seal entrances could result in sever personal injury, death or substantial property damage.

Wire routing in the cabinet (see next page)

Line voltage: (120VAC in, circulator outputs)

1. Line voltage should be wired from the bottom middle electrical entrances going into the High voltage junction box.
2. Strip end of wire no more than 1/4" to avoid exposing uninsulated wire.
3. It is recommended to install an On/Off service switch in a junction box mounted near the boiler. Installation must meet all National and local electrical codes.

Low voltage:

1. Mount low voltage wire grommet(s) to desired low voltage knockout(s).
2. Thermostat, aquastat, limit devices, system sensors, 0-10VDC input and outdoor temperature sensor wire pairs should be routed through the grommet(s)/knockout(s).

Field wiring (continued)

3. Wires should be connected directly into the corresponding terminal block.
4. Low water cutoff harness should be routed from location shown in page 41 to control module connection shown in Section G, page 38. Provide strain relief and a seal at cabinet entry if mounted external of the cabinet.
5. Bundle all wires together with provided wire ties. Loop wire tie with bundled wires through wire tie mount and secure mount to control bracket in bottom right mounting hole.
6. After wires and connectors are attached to the control terminal blocks, make sure wires are properly sealed in the cabinet electrical entrances.

Multiple boiler communication wiring

1. Route communication harness through knockout and connect to J12 – Kit-RS485 Communication Harness P/N 383700272 (sold separately).
2. Mount junction box near boiler and connect harness to j-box circuit board J1 connection.
3. Wire circuit board according to Section N of page 41.

Figure 17 Field wiring overview - Line and low voltage entrances

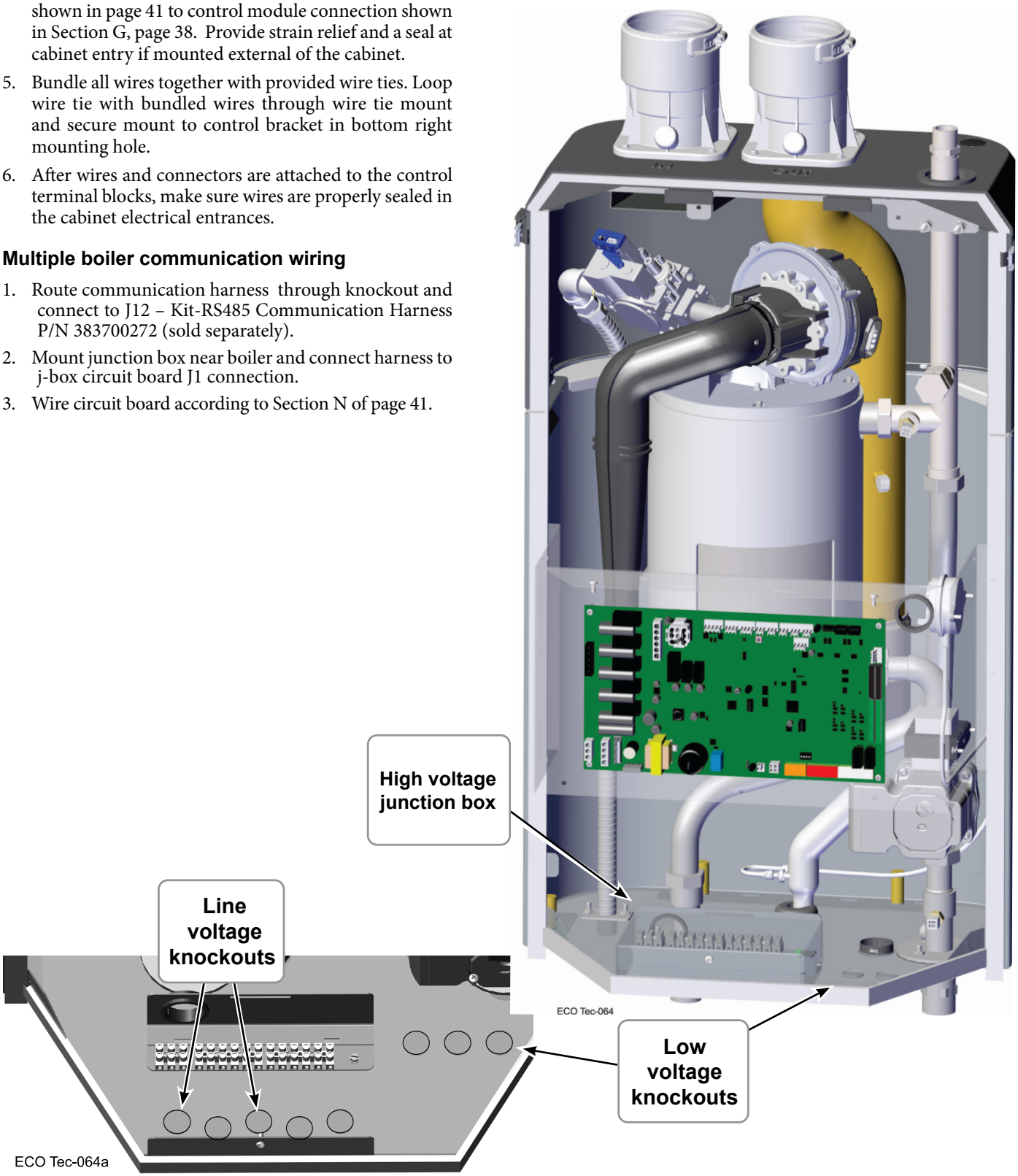

Field wiring *(see wiring diagram, Figure 18, page 44) (continued)*

NOTICE **Combi models use Input/Output pairs 1 and 4 for 3-way valve operation and cannot be used for any other purpose. Use Input 2 for Indirect DHW (if needed) and Input 3 for Space Heating applications.**

A. 120VAC Power Supply – *REQUIRED*

Terminal Strip T1

1. Provide and install a properly-sized, fused disconnect or service switch as required by applicable codes. (15-amp for most cases.)
   a. Use table at right to determine total load.
2. Connect properly sized 120VAC power wiring to the **ECO Tec** boiler line voltage terminal block T1 as shown at right.
3. If possible, provide a surge suppressor in the supply power line. This will reduce the possibilities of control damage due to line surges.
4. Must wire ground to this terminal to provide boiler grounding. Failure to properly ground the boiler can lead to abnormal operation and potential hazards.

Determine total load	
Boiler & boiler pump (combined load)	2.5 amps
Output 1 . . . . . (2.2 amps max)	____ amps
Output 2 . . . . . (2.2 amps max)	____ amps
Output 3 . . . . . (2.2 amps max)	____ amps
Output 4 . . . . . (2.2 amps max)	____ amps
TOTAL	

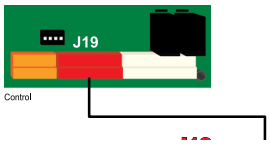

See Figure 18, page 44 for details

B. 120VAC Outputs 1, 2, 3 & 4 – *As needed for systems*

Terminal Strip T2 & T3

Note: Input/Output 1 & 4 are unassigned/ not available in Combi models.

1. Output 1: (Heat Only) T2: 4, 5, & 6
2. Output 2: T2: 7, 8, & 9
3. Output 3: T3: 10, 11, & 12
4. Output 4: (Heat Only) T3: 13, 14, & 15.
5. Maximum load: 2.2 amps (use relay if circulator load is higher). See WARNING below.
6. These four outputs (Output 1, Output 2, Output 3, and Output 4) can provide 120VAC to the following listed below:
   - A zone circulator.
   - A system circulator.
   - A DHW circulator (used to circulate through an indirect tank).
   - An auxiliary Item that may be energized during an input call, such as an air damper.
7. When using inputs/outputs for heat/Indirect DHW demands, each input (Input 1, Input 2, Input 3, and Input 4) controls its respective 120VAC output (Output 1, Output 2, Output 3, and Output 4). Outputs are energized only when BOTH conditions below are met:
   a. The corresponding input indicates a call for heat/ Indirect DHW (i.e. contact closure).
   b. The PRIORITY assigned to the Input/Output pair is ACTIVE (i.e. the zone may be calling but the pump won't activate unless the boiler is currently running on that system/priority).

NOTICE The 3-way valve will operate for Combi models, activating Output 1 for Combi DHW calls, and activating Output 4 for any Space Heating calls.

8. When using the inputs/outputs for the AUX PUMP/OUTPUT function, the output is controlled by selectable conditions set up in the control.
   a. Use the AUX PUMP/OUTPUT function for devices such as system pumps, combustion air dampers, and other auxiliary equipment to activate when the selected condition is met.
   b. See page 70 for more information on the setup and selection of operating conditions.

NOTICE **For Priority Indirect DHW Application:**
The DHW aquastat can be connected to any one of the four (4) input/output pairs for Heat Only models and Inputs 2 or 3 for Combi models. The selected input should be assigned to LOCAL PRIORITY 1 during the WIZARD setup or manually in the System Settings menu for Heat Only models or LOCAL PRIORITY 2 for Combi models.

Use Priority 2 - Network 1 for system piped DHW applications.

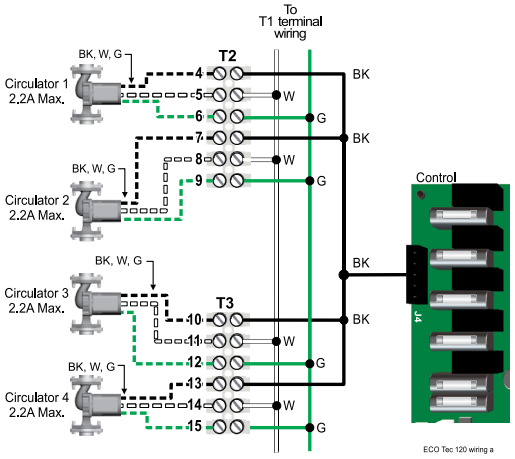

See Figure 18, page 44 for details.

WARNING **Output circuits are 120VAC. If an output is to operate a low voltage circuit or must be an isolated contact, use an isolation relay.**

WARNING **CIRCULATOR POWER — The maximum allowable current for each circulator is 2.2 amps at 120VAC.** For circulators with higher amp ratings, install a circulator relay or starter. Connect only the 120VAC coil to the circulator terminals.

Field wiring *(see wiring diagram, Figure 18, page 44) (continued)*

NOTICE **Combi models use Input/Output pairs 1 and 4 for 3-way valve operation and cannot be used for any other purpose. Use Input 2 for Indirect DHW (if needed) and Input 3 for Space Heating applications.**

C. Inputs 1, 2, 3 and 4 (demands) – *As needed for systems*

Connector J17 (Input 1, 2, & 3) & Connector J16 (Input 4, 0-10VDC Input)

1. Input 1 – Connector J17 – 1, 2 & 3 (common)
2. Input 2 – Connector J17 – 4, 5 & 6 (common)
3. Input 3 – Connector J17 – 7, 8 & 9 (common)
4. Input 4 – Connector J16 – 1, 2 & 3 (common)
5. These four (4) inputs on each boiler can indicate a call for heat to the control by means of a dry contact closure (thermostat, aquastat, or switch). (See right and Figure 18, page 44).
6. The control provides inputs for up to four (4) demands and up to three (3) systems (priorities).
7. **For Priority Indirect DHW Application:**

   The DHW aquastat can be connected to any one of the four (4) input/output pairs for Heating Only models and Inputs 2 or 3 for Combi models. The selected input should be assigned to LOCAL PRIORITY 1 during the WIZARD setup or manually in the System Settings menu for Heating Only models or LOCAL PRIORITY 2 for Combi models.
8. The default control setting uses each input (INPUT 1, INPUT 2, INPUT 3 and INPUT 4) to control its respective 120VAC output (OUTPUT 1, OUTPUT 2, OUTPUT 3 and OUTPUT 4). For Combi models, input 1 and 4 and output 1 and 4 are reserved for Combi calls for heat and 3-way valve operation.

NOTICE Use of 0–10VDC input for modulation disables Input 2 T/T input from creating calls for heat. See page 40 for instructions.

An input can be assigned to an AUX PUMP/OUTPUT function to operate a system pump or interlock with a combustion air damper. Inputs assigned for this function cannot be used for heat demand operation. See page 70 for more information on the setup and selection of operating conditions.

Use Priority 2 - Network 1 for system piped DHW applications.

TT or end switch inputs
(INPUTS 1, 2, 3 and 4)
With External 0-10VDC inputs

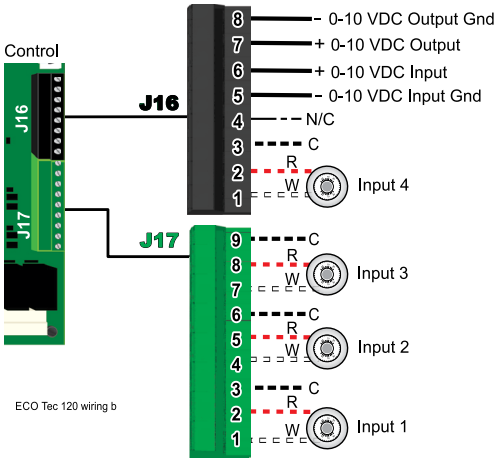

See Figure 18, page 44 for details.

WARNING **Thermostats — DO NOT** supply 24-volt power to the thermostat circuits (Input 1, Input 2, Input 3 and Input 4 in Figure 18, page 44) or attempt to supply 24 volts for any other application.

For thermostats that require a continuous 24-volt power source, connect the common wire ("C") (see Figure 18, page 44). Do NOT exceed 120mA total amp draw at 24VAC per thermostat.

Zone valves — If using 3-wire zone valves, use relays to provide dry contacts to the Control thermostat connections. The zone valve end switches of 3-wire valves carry 24VAC from the valve.

Thermostat anticipator setting — 0.1 amps.

Field wiring *(see wiring diagram, Figure 18, page 44) (continued)*

NOTICE **Combi models use Input/Output pairs 1 and 4 for 3-way valve operation and cannot be used for any other purpose. Use Input 2 for Indirect DHW (if needed) and Input 3 for Space Heating applications.**

D. System supply and return temperature sensors – *Required when using primary secondary piping design.* *Connector J19*

1. It is recommended to use two (2) strap-on temperature sensors (separate kit option). Attach one to the system supply piping and the other to the system return piping. For piping larger than 5 inch diameter or nonmetallic piping, using immersion sensors will provide faster response.
2. Locate the supply sensor at least six pipe diameters, but no further than 3 feet, downstream from the boiler connection to the main to ensure adequate mixing.
3. Return sensor – wire between J19 #1 and #2.
4. Supply sensor – wire between J19 #3 and #4.
5. Thermostat wire can be used to connect these sensors.

NOTICE It is required for all primary/secondary heating systems shown in this manual that the System Supply and Return sensors to be installed for proper control function. System may not properly provide desired temperature if sensors are not installed according to these instructions.

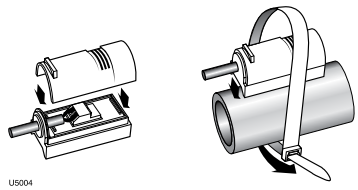

Strap to supply & return piping

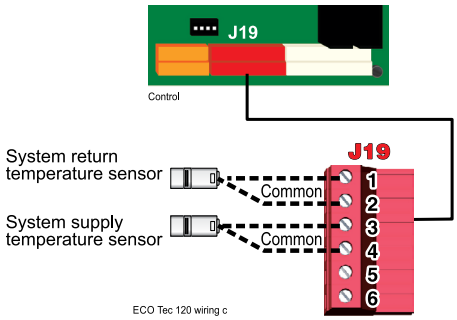

See Figure 18, page 44 for details

E. Outdoor temperature sensor – *REQUIRED unless exempted*

Connector J19

1. The control provides programmable options if using an outdoor temperature sensor. This sensor is supplied with the boiler.
2. **The outdoor sensor must be installed unless specifically exempted in the Energy Act statement on page 2.**
3. Mount the outdoor sensor on an exterior wall, shielded from direct sunlight or flow of heat or cooling from other sources.
4. The wire outlet on the sensor must be oriented DOWN to prevent water entry.
5. Connect the sensor leads to the terminal shown at right and in the wiring diagrams (see Figure 18, page 44). Thermostat wire can be used to connect the sensor.

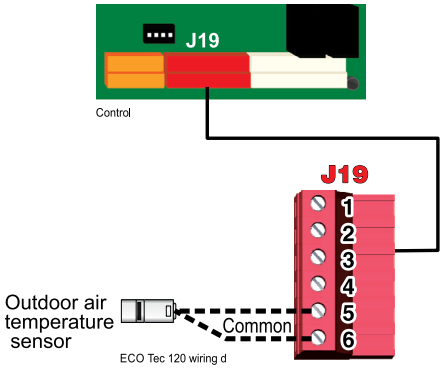

See Figure 18, page 44 for details

F. External limits – *OPTIONAL*

To cause MANUAL reset: Connector J20 #1 & #2

The control will require manual reset after circuit is interrupted.

Remove factory-installed jumper and connect isolated contacts of external limits across J20 pins 1 and 2 to cause the control to enter manual reset lockout if the limit circuit opens. The limit must close and the control must be manually reset using the procedure given in this manual. See drawing at right and wiring diagram Figure 18, page 44.

NOTICE The control will lockout when a limit in its manual reset circuit opens (J20 pins 1 & 2). The control activates its alarm terminals and shuts the boiler down. An operator (user or technician) must manually reset the control to restart the boiler.

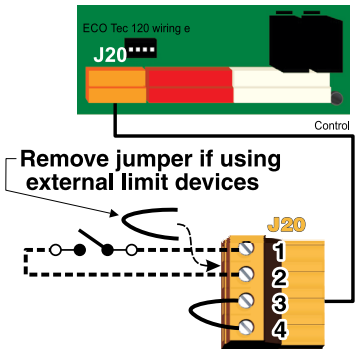

See Figure 18, page 44 for details.

Field wiring *(see wiring diagram, Figure 18, page 44) (continued)*

NOTICE **Combi models use Input/Output pairs 1 and 4 for 3-way valve operation and cannot be used for any other purpose. Use Input 2 for Indirect DHW (if needed) and Input 3 for Space Heating applications.**

To cause **AUTOMATIC** reset: Connector J20 #3 & #4

The control will reset automatically after circuit is interrupted.

1. Remove factory-installed jumper and connect isolated contacts of external limits across J20 pins 3 and 4 to cause the control to shut down the boiler on limit opening, then automatically restart 150 seconds after the limit closes.
2. See drawing at right and wiring diagram (Figure 18, page 44).

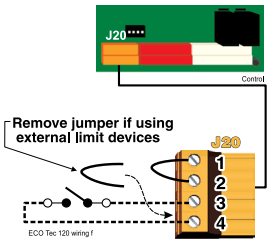

See Figure 18, page 44 for details.

G. Low water cutoff (LWCO) – *Required (Installer Supplied)*

Connector J21

1. Install a low water cut-off (required - Install supplied)
2. Wiring Weil-McLain LWCO Kit:
   a. When possible, use the Weil-McLain Low water cut-off kit listed in the back of this manual. It includes a probe-type low water cut-off and provides a simple harness connection for the wiring.
   b. Connect as shown at bottom center in the control wiring diagram (Figure 18, page 44).
3. Wiring another LWCO — must have isolated contact:
   a. Other low water cut-offs can be used with the **ECO Tec** only if the device uses an isolated contact for the LWCO function.
   b. Connect as shown at bottom right.

Wiring for Weil-McLain LWCO Kit

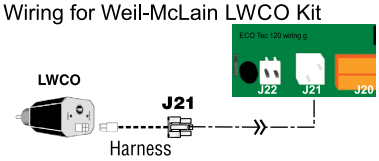

Wiring other isolated contact LWCO

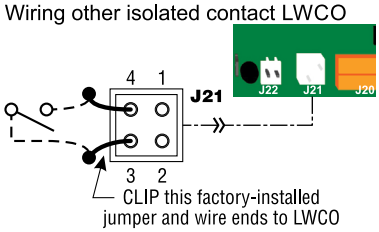

See Figure 18, page 44 for details.

H. Alarm contacts – *OPTIONAL*

Connector J18 #4 & #5

1. The control's alarm dry contact (J18, terminals 4 and 5) closes when the boiler enters manual lockout only.
2. Connect these terminals for remote alarm notification.
3. Contact electrical ratings: 24VAC or less; 0.5 amp or less.

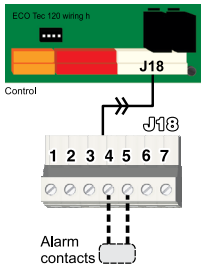

See Figure 18, page 44 for details.

I. Additional heat demand contacts – *OPTIONAL*

Terminal Block J18 #6 & #7

1. The circuit board can be set to activate another heat source using its additional heat demand dry contacts through terminal block J18 pins 6 & 7.
2. Connect these terminals to call for heat from the other heat source.
3. Contact electrical ratings: 24VAC or less; 0.5 amp or less.
4. Set the control to activate the heat demand contacts as needed.
5. For Additional Heat Demand, refer to setup in Control section for more information.

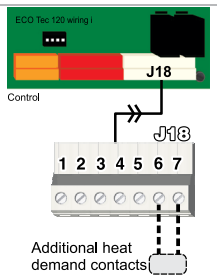

See Figure 18, page 44 for details.

Field wiring *(see wiring diagram, Figure 18, page 44) (continued)*

NOTICE **Combi models use Input/Output pairs 1 and 4 for 3-way valve operation and cannot be used for any other purpose. Use Input 2 for Indirect DHW (if needed) and Input 3 for Space Heating applications.**

J. Proof of closure (flow switch and/or CAD)

Jumper on Connector J18

1. A flow switch or combustion air damper (CAD) interlock can be configured by removing the jumper on connector J18 and wiring components as shown at right and in the wiring diagram (Figure 18, page 44).
2. No control settings are required when using a flow switch.
3. Recommended configuration of the control for a CAD interlock:
   a. Assign **INPUT 3** as a **AUX PUMP/OUTPUT** function.
   b. For the **AUX PUMP/OUTPUT** operating mode, select local or **System Damper** for use with CAD Interlock. This ensures the damper will be activated any time the boiler is called on to fire.
   c. **OUTPUT 3** will provide 120VAC to the damper motor. Use an isolation relay if damper motor requires another voltage or more than 2.2 amp if using 120VAC.
   d. For multi-boiler wiring of CAD interlock, wire all Proof of Closure inputs in series with the endpoint devices and each boiler's Closure Switch input. For Local Damper operation, wire each Proof of Closure input individually, do not wire in series with other boiler's Closure Switch inputs.

NOTICE * The devices used must provide electrically isolated contacts, because the J18 jumper circuit carries 5 VDC.

J18-1 has a PTC trip current of 340mA with a hold current rating of 140mA at 20 degrees C.

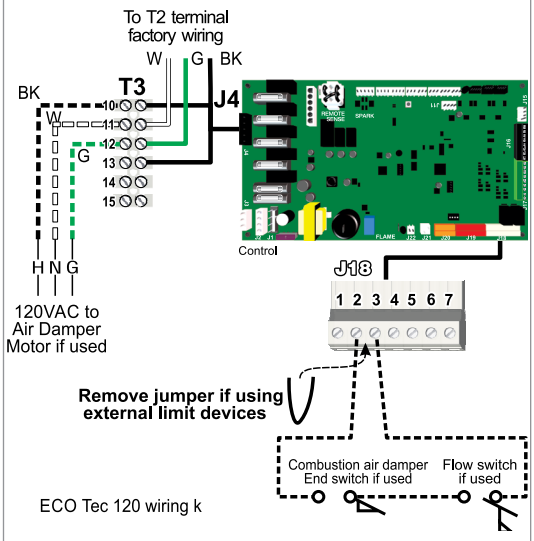

See Figure 18, page 44

K. 0–10 VDC Remote TARGET input – *OPTIONAL*

Connector J16 #5 & #6

1. See illustration at right and Figure 18, page 44 (wiring diagram) for details.
2. Remote target using 0–10VDC input requires a 0–10VDC input signal at J16-5/6 as shown at right.
   a. The input positive connection must be at J16 terminal 6 and the common connection at terminal 5.
3. This illustration also shows how to connect TT or end switch contacts at INPUT 1, INPUT 2, INPUT 3 and INPUT 4.
   a. If a Heat/Indirect DHW demand is required, connect the demand's dry contact to an unused input on the control and its pump/valve to the respective output. Then assign and setup a priority to the input using the Wizard or manually through the contractor menu.
   b. A dry contact heat demand must be applied to one of the inputs in order to initiate a call for heat.
4. The 0–10VDC signal is used to adjust the supply target temperature, using the TARGET ADJUST setting. Set TARGET ADJUST during the WIZARD or manually in the PRIORITY SETTINGS menu for the desired system/ priority.
   a. Many options are available for configuring the control. The following is a suggested setup that uses factory default settings as much as possible.
   b. Use PRIORITY 1 for the Indirect DHW heating system when used. This priority's default values are set for Indirect DHW, direct-piped to the boiler. Verify that settings are suitable for the application, change if needed. Use Priority 2 for Combi models.
   c. Use PRIORITY 2 for the heating systems. Use PRIORITY 3 for Combi models.
      - The factory default settings for PRIORITY 2 or 3 make either priority a good choice for space heating applications. Set PRIORITY 2/3 values to the following:
      - Set TARGET ADJUST value to 0–10V.
      - Set VOLTS FOR MAX TARGET at the voltage that will call for the highest target temperature. Set MAX TARGET TEMP at this temperature.
      - Set VOLTS FOR MIN TARGET at the voltage that will call for the lowest target temperature. Set MIN TARGET TEMP at this temperature.
      - For voltages between VOLTS FOR MAX and VOLTS FOR MIN, the target temperature will range proportionately between MAX TARGET TEMP and MIN TARGET TEMP.

NOTE: The 0–10VDC signal replaces the Outdoor Temp sensor as the target temperature modifier (TARGET ADJUST setting). The control does not control target.

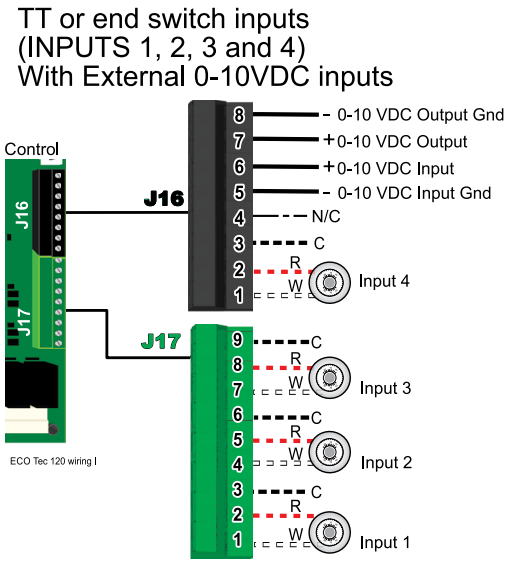

See Figure 18, page 44 for details.

Field wiring *(see wiring diagram, Figure 18, page 44) (continued)*

NOTICE **Combi models use Input/Output pairs 1 and 4 for 3-way valve operation and cannot be used for any other purpose. Use Input 2 for Indirect DHW (if needed) and Input 3 for Space Heating applications.**

L. 0–10 VDC Input – *(Single boiler only)*

Connector J16 #5 & #6

1. See illustration at right and Figure 18, page 44 for details.
2. This illustration also shows how to connect TT or end switch contacts at INPUT 3 and INPUT 4 for other uses.
3. Note that using 0–10VDC input replaces INPUT 2 for generating a heat demand. Do **NOT** wire any input to INPUT 2 as shown at right.
4. Remote modulation requires a 0–10VDC input signal at J16-5/6 as shown at right.
   a. The 0–10VDC input positive connection must be at terminal 6 and common connection at terminal 5.
5. Control setup:
   a. Many options are available for configuring the control. The following is a suggested setup that uses factory default settings as much as possible.
   b. If Indirect DHW is required:
      - Connect the DHW aquastat to INPUT 3 or INPUT 4 and assign the input used to PRIORITY 2.
      - Verify that control settings are suitable for the application, change if necessary.
   c. Use PRIORITY 3 for the system to be remote modulated.
      - Assign INPUT 2 to the priority chosen. Accept all defaults for INPUT 2 — no changes should be necessary during the WIZARD.
      - After the WIZARD has been completed, go to the SYSTEM SETTINGS – INPUT USAGE menu for INPUT 2. Change SOURCE to 0–10V (default setting is TT1). See page 64 for System Settings menu information.
6. Operation:
   a. The boiler comes on at 0.9VDC and turns off at 0.5VDC. 1 VDC = 10% input. 10 VDC = 100% input. These voltage settings are adjustable.
   b. OUTPUT 2 (120VAC) is activated and deactivated as the heat demand is turned on and off.

NOTE: The control can be configured to use either 0–10VDC for target operation (see previous section) or modulation, **but not both**.

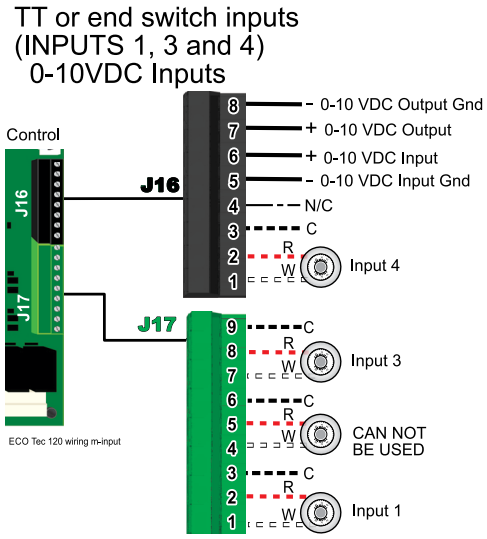

See Figure 18, page 44 for details.

M. 0–10 VDC Output

Connector J16 #7 & #8

1. See illustration at right and Figure 18, page 44 for details.
2. Control setup:
   a. For network 0-10V output, connect on Master Boiler and assign Net1/Net2 to use Additional Heat Demand (AHD). For local priority 0-10V output, connect on either Master or Shadow and assign Local 1/Local 2 to use AHD. For Single boiler, connect on any Input and assign Priority 1, 2 or 3 to use AHD.
   b. Adjust Max Rate Volts to desired maximum voltage output. Adjust Min Rate Volts to desired minimum voltage output.
3. Operation:
   a. The 0–10VDC Output only activates when Additional Heat Demand is set to be used, a call for heat that uses AHD is active and Temp Dependent is set to Yes. Valid systems sensors must be present.
   b. The 0-10VDC Output will follow the requested modulation rate, with 10% = Min Rate Volts, and 100% = Max Rate Volts. Voltages between are scaled accordingly.

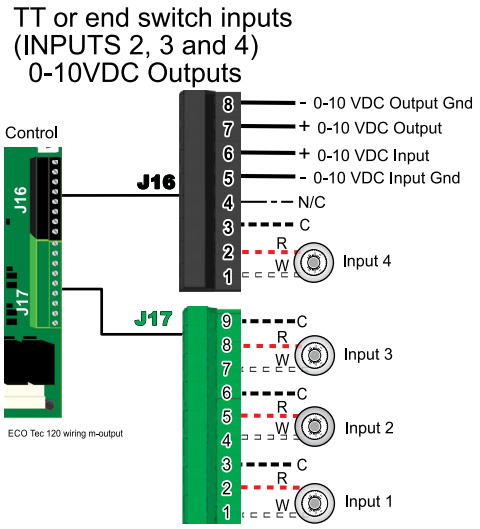

See Figure 18, page 44 for details

Field wiring *(see wiring diagram, Figure 18, page 44)*

NOTICE **Combi models use Input/Output pairs 1 and 4 for 3-way valve operation and cannot be used for any other purpose. Use Input 2 for Indirect DHW (if needed) and Input 3 for Space Heating applications.**

N. Multiple Boiler and BMS Connections

Connector J12

1. The **ECO Tec** Unity 2.0 control is capable of multiple boiler communication and can control up to eight **ECO Tec** or Unity™ control boilers in one installation. The **ECO Tec** boiler MUST be the Master boiler in these applications. One multi-boiler wiring kit is required per boiler and sold separately (P/N 383-700-272).
2. The boiler control is also capable of Building Management System (BMS) communication. For applications using both BMS and multi-boiler, use only the multi-boiler wiring kit (P/N 383-700-272).
3. Attach the RS485 communication harness (included in the multi-boiler wiring kit) to J12 on the control board.
4. Wiring for RS485 communication harness endpoint circuit board is as follows:
   a. JP4-1 = A2 (RS485 Multi-boiler Bus A+)
   b. JP4-2 = B2 (RS485 Multi-boiler Bus B-)
   c. JP4-3 = GND (RS485 Multi-boiler Bus GND)
   d. JP4-4 = A3 (RS485 Multi-boiler Bus A+)
   e. JP4-5 = B3 (RS485 Multi-boiler Bus B-)
   f. JP4-6 = GND (RS485 Multi-boiler Bus GND)
   g. JP4-7 = GND (BMS Ground)
   h. JP4-8 = BMS B (BMS B-)
   i. JP4-9 = BMS A (BMS A+)
5. Boiler to boiler wiring connections (see wiring at right)
   a. Use shielded 3-wire cable. Do not exceed 1,000 feet length.
   b. Connect 3-wire cable between Boiler-to-Boiler OUT (JP4-GND, B2, A2) on one boiler to Boiler-to-Boiler IN (JP4-GND, B3, A3) on the next boiler.
   c. Continue this wiring until all boilers are interconnected.

NOTICE *DO NOT return last shadow's wires to Master's A3/B3/GND ports! This will create a communication loop, which will cause duplication of information and clashes in communication. The result is undesired and unknown behavior, up to and including complete loss of communication.*

6. **For applications using only BMS**, use the wiring harness supplied with the boiler (and also sold separately, P/N 383-700-401). Remove pre-cut insulation on the harness and use wire nuts to tie in field wiring. BMS harness leads are as follows:
   a. J12-1 = BMS A+
   b. J12-2 = BMS B-
   c. J12-5 = BMS Ground
7. MODBUS to BMS
   a. The control is equipped with MODBUS communication to communicate with a BMS.
   b. Use terminal JP4 (JP4-BMS A+, BMS B-, GND) to wire to the BMS control.
   c. If the BMS uses BACnet protocol, install a BACnet converter between the BMS and the **ECO Tec** MODBUS-to-BMS terminals on JP4.
8. Navigate to the Modbus Setting screen on the display. This is accessed via the contractor menu by pressing and holding the **WM** Logo from the home screen.
9. Adjust all necessary Modbus settings to match the BMS system being utilized.

Multi-boiler or Combined Multi-boiler/BMS Applications - Wiring Diagram

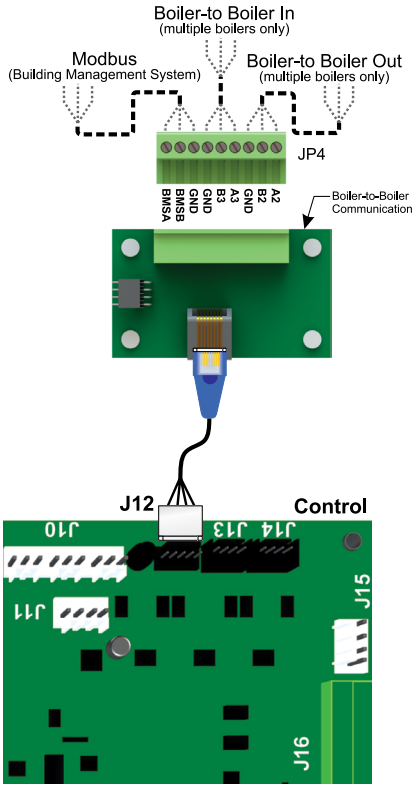

BMS Only Application - Wiring Diagram

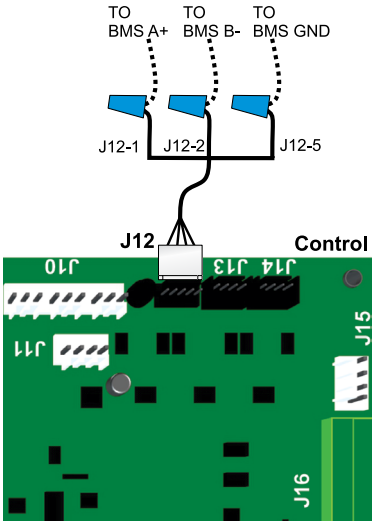

ECO Tec 120 wiring s

Field wiring (see wiring diagram, Figure 18, page 44)

O. Touch screen display connections – *Display to Control*

Connector J13 or J14

1. The electronic color touch screen display is factory wired to the control and is connected to the J13 or J14 connector.
2. The Display harness is wired to a spring terminal on the mounting bracket. The wires are as follows: J14 is used as the example. J13 uses the same wiring pin out on the control board.
   a. J14-1 White to A+
   b. J14-2 Green to B-
   c. J14-3 Black to C
   d. J14-4 Red to R

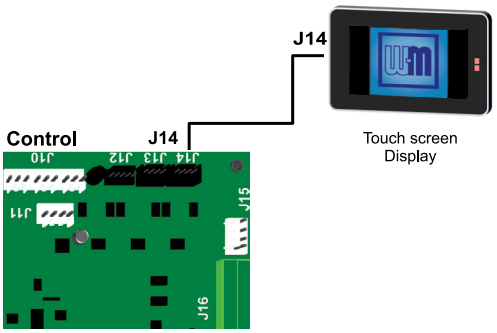

ECO Tec 120 wiring od

View of inside back of display.

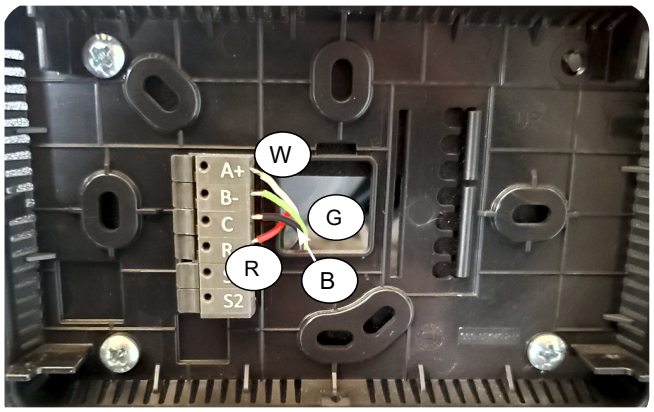

ECO Tec-805

Page Intentionally Blank

Wiring diagram — schematic

Figure 18 ECO Tec schematic wiring diagram (see Figure 19, page 46 for legend and notes)

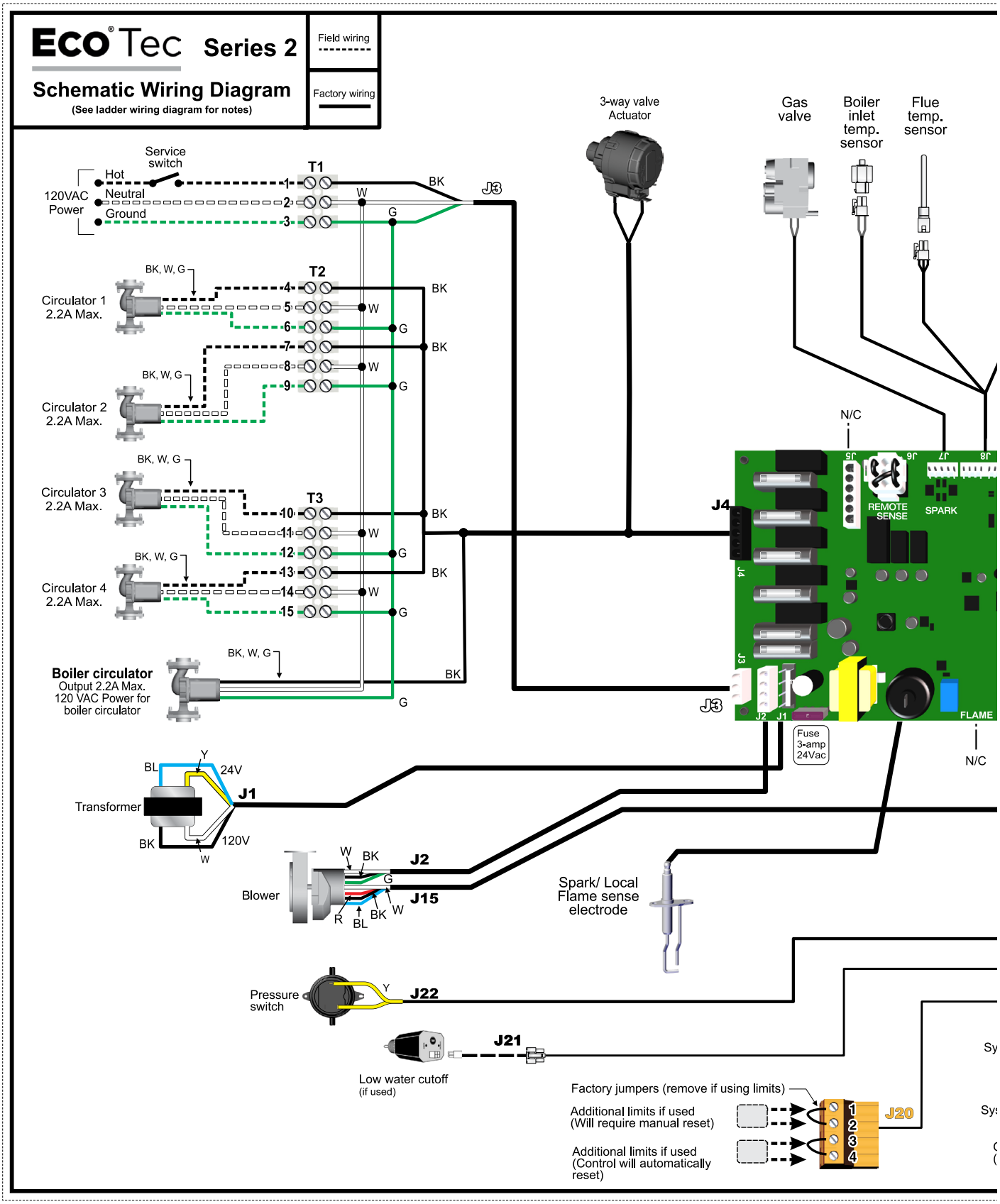

Wiring diagram — schematic (continued)

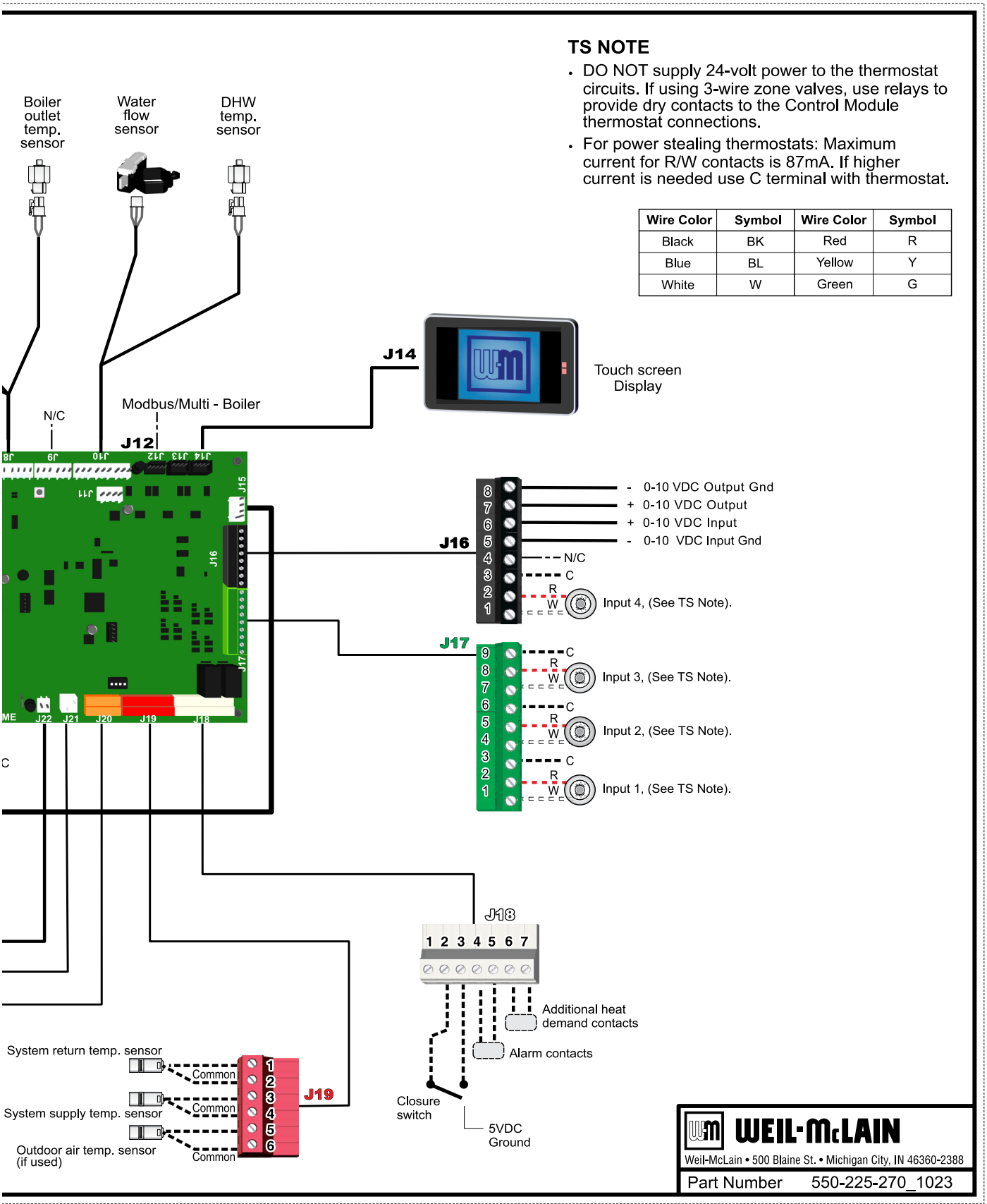

Wire Color	Symbol	Wire Color	Symbol
Black	BK	Red	R
Blue	BL	Yellow	Y
White	W	Green	G

Wiring diagram — ladder

Figure 19 ECO Tec ladder wiring diagram (see Figure 18, page 44 for schematic wiring diagram)

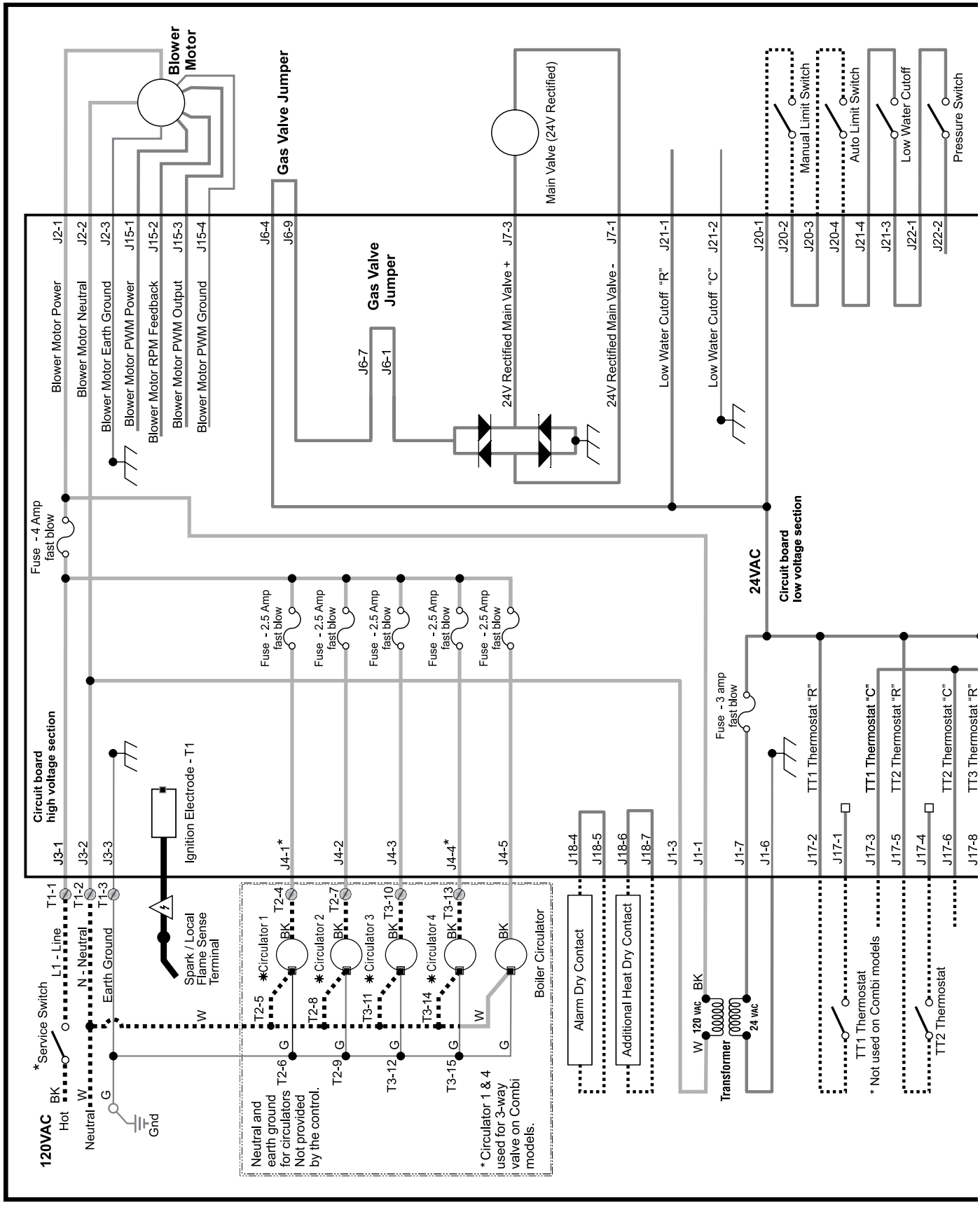

Wiring diagram — ladder (continued)

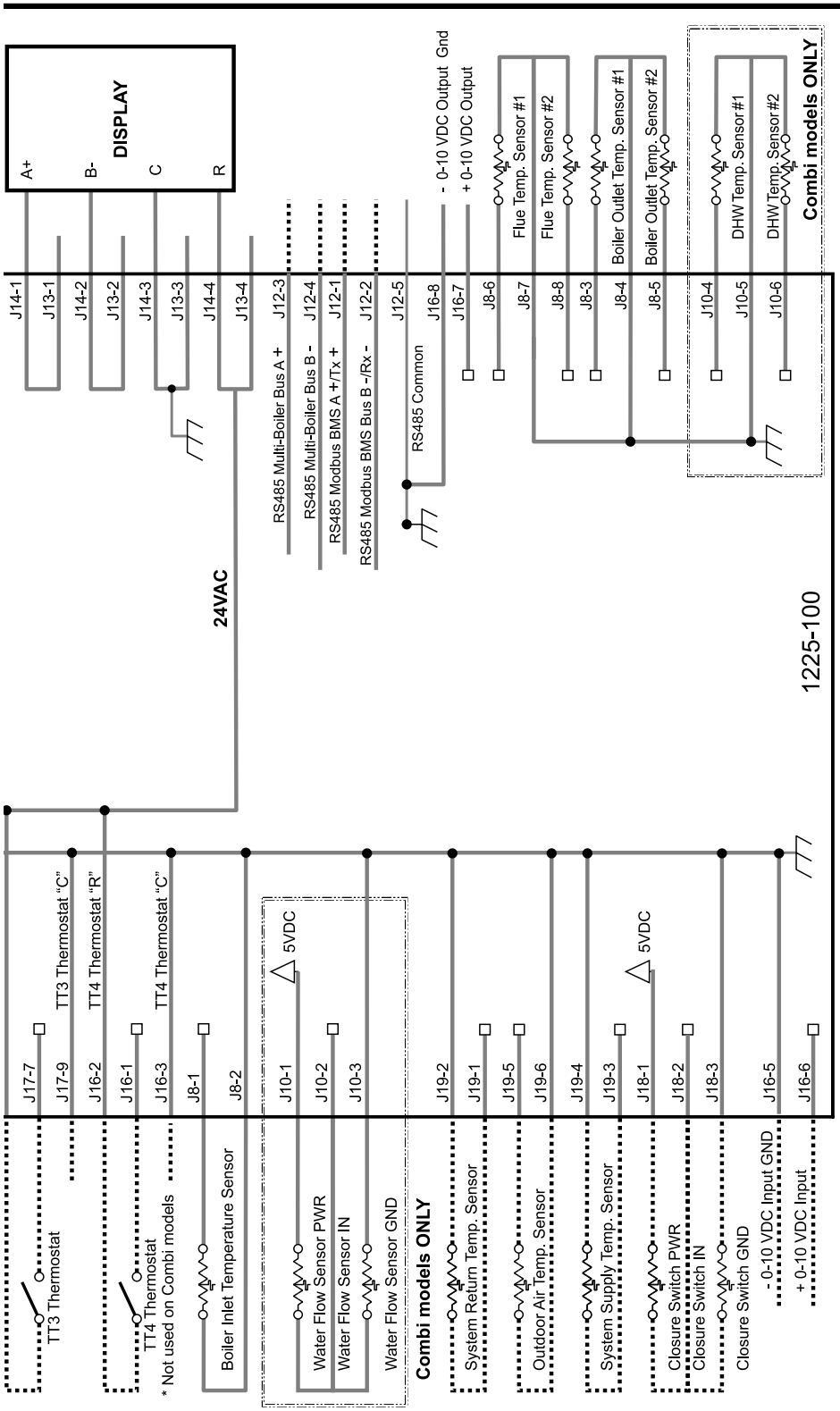

ECO® Tec Series 2

Ladder Wiring Diagram

⚠WARNING

Electrical shock hazard — can cause severe injury or death. Disconnect power before installing or servicing.

NOTICE

- All contacts shown without power applied.

✶ **Items not provided.**

NOTES *(for Schematic and Ladder Diagrams)*

1. All wiring must be installed in accordance with:
   U.S.A. — NEC ANSI/NFPA 70 - latest edition and any other national, state, or local code requirements.
   Canada — CSA C22.1 C.E.C. Part 1 and any other national, provincial, or local code requirements.
2. Connect additional limits (if used) between terminals J20-1 and J20-2 if the boiler circuit board is to manual reset on limit action. Connect between terminals J20-3 and J20-4 for automatic reset. Remove jumper across terminals used.
3. If any of the original wire as supplied with the appliance must be replaced, use minimum 105° C wire or equivalent. Exceptions: Ignition lead wire, ignition ground wire, and flame sense wire must be replaced only with Weil-McLain parts.
4. Thermostat anticipator setting (single zone) — set anticipator for 0.1 amps.
5. For multiple zoning, use either zone valves or circulators. Refer to the component manufacturer's instructions and the manual for application and wiring suggestions. Boiler circulator must remain with boiler, and cannot be used for system circulation in any way.
6. Refer to control component instructions packed with the boiler for application information.
7. Preferably, use the provided Weil-McLain LWCO Kit, part number 511-100-005, with LWCO, Molex plug and wire harness. Remove the factory Molex, and plug the LWCO harness ends into the low water cutoff receptacle and J21 on the circuit board. To field wire a non-powered (isolated contact) low water cutoff, clip the factory jumper in the factory-installed Molex plug, strip the wires, and connect to the low water cutoff limit terminals.

Legend for ladder wiring diagram only

- 120VAC field wiring
- Low voltage field wiring
- Field ground connectors
- 120VAC factory wiring
- Low voltage factory wiring
- High voltage spark ignition wiring
- Ground connectors

WEIL-McLAIN

Weil-McLain • 500 Blaine St. • Michigan City, IN 46360-2388

Part Number 550-225-271_1021

Zoning with the ECO Tec Control

NOTICE **Combi models use Input/Output pairs 1 and 4 for 3-way valve operation and cannot be used for any other purpose. Use Input 2 for Indirect DHW and Input 3 for Spacing Heating applications.**

A. Zoning with CIRCULATORS – *suggested applications*

Four space heating zones (no Indirect DHW)

(Heating Only models shown).

1. Review wiring information on page 35 (120VAC outputs) and page 36 (24VAC inputs).
2. The configuration at right uses the four input/output pairs to receive thermostat inputs on J17-1/2, J17-4/5, J17-7/8 and J16-1/2; and circulator outputs as shown.
3. Choose the space heating system type that matches the heating system during the WIZARD setup or manually in the NETWORK PRIORITY 2 menu in the System Settings menu.
4. Use the factory default settings for the system type chosen, or change if needed.

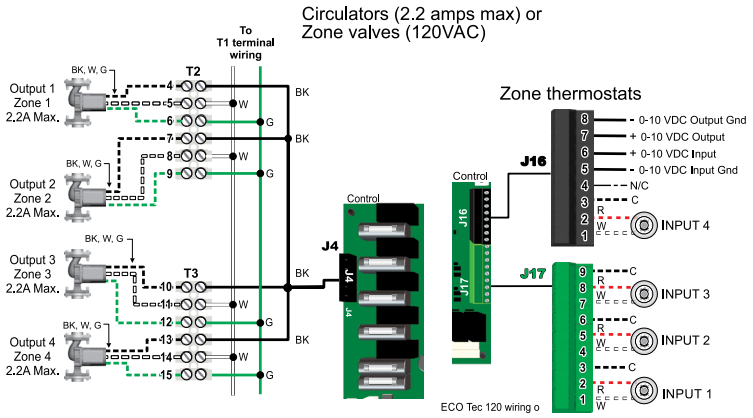

Three space heating zones plus Indirect DHW piped directly to boiler (Heating Only models shown).

1. Review wiring information on page 35 (120VAC outputs) and page 36 (24VAC inputs).
2. The configuration at right uses INPUT 3 and 4 for space heating thermostats. INPUT 1 uses the input from a DHW aquastat.
3. Set Inputs 2, 3 and 4 to NETWORK PRIORITY 2. To set up NETWORK PRIORITY 2, choose the space heating system type that matches the heating system during the WIZARD setup or manually in the NETWORK PRIORITY 2 menu in the System Settings menu.
4. Assign INPUT 1 to LOCAL PRIORITY 1, or use INPUT 2 NETWORK PRIORITY 2 for Combi models.
5. Use the factory default settings for DHW and for the heating system type chosen, or change if needed.

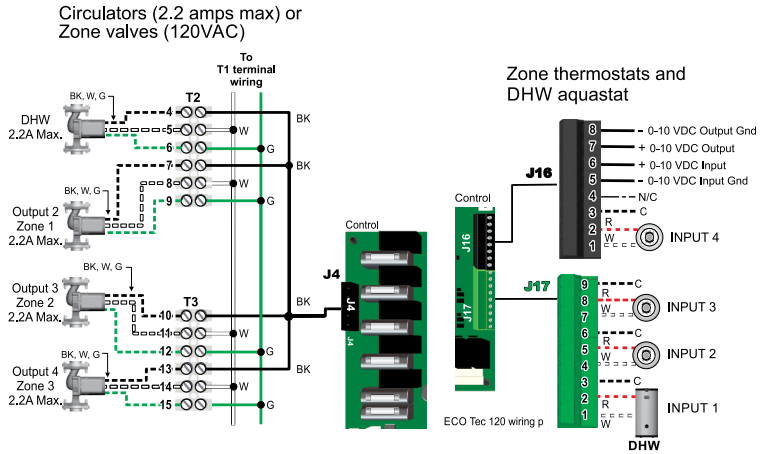

Zoning with the ECO Tec Control (continued)

NOTICE **Combi models use Input/Output pairs 1 and 4 for 3-way valve operation and cannot be used for any other purpose. Use Input 2 for Indirect DHW and Input 3 for Spacing Heating applications.**

B. Zoning with ZONE VALVES – *suggested applications*

Two space heating zones (no Indirect DHW)
(Heating Only models shown)

1. Review wiring information on page 35 (120VAC outputs) and page 36 (24VAC inputs).
2. The configuration at right uses INPUT 2, 3, and 4 for space heating thermostats. INPUT 1 is reserved here for configuring the operation of the system circulator.
3. Set Inputs 2, 3 and 4 to NETWORK PRIORITY 2. To set up NETWORK PRIORITY 2, choose the space heating system type that matches the heating system during the WIZARD setup or manually in the NETWORK PRIORITY 2 menu in the System Settings menu.
4. Use the factory default settings for the heating system type chosen, or change if needed.
5. Assign INPUT 1 (Input 2 for Combi models)to AUX PUMP/OUTPUT. Then select INPUTS PRIORITY SETTING when prompted for when to activate the output. This will cause the system pump to run when either of the zones calls for heat. Confirm that Priority 2 RUN AUX PUMP/OUT is set to YES.
6. INPUT 1, J17-1/2, (Input 2, J17-4/5 for Combi models) cannot be used for a wired connection because it is being used in the control setup to run the system circulator.

WARNING The system must be equipped with a by-pass pressure regulating valve. Flow can occur with zone valves closed.

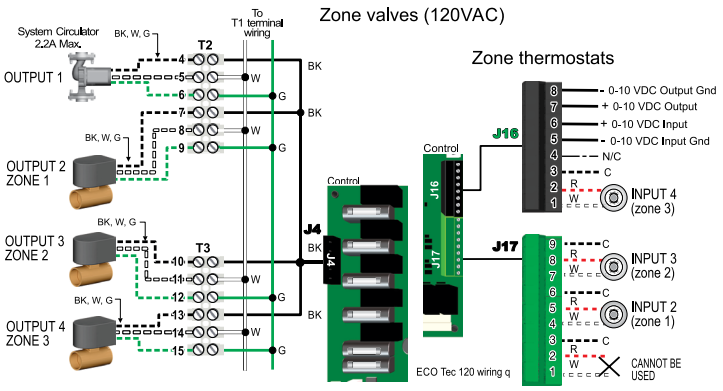

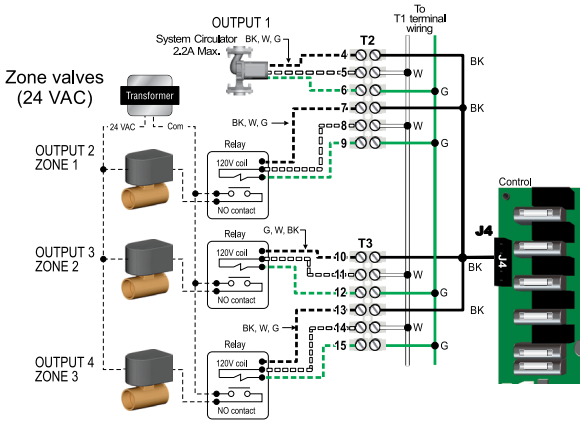

Control operation

Figure 20 Boiler essential settings **(REQUIRED on initial start-up)**

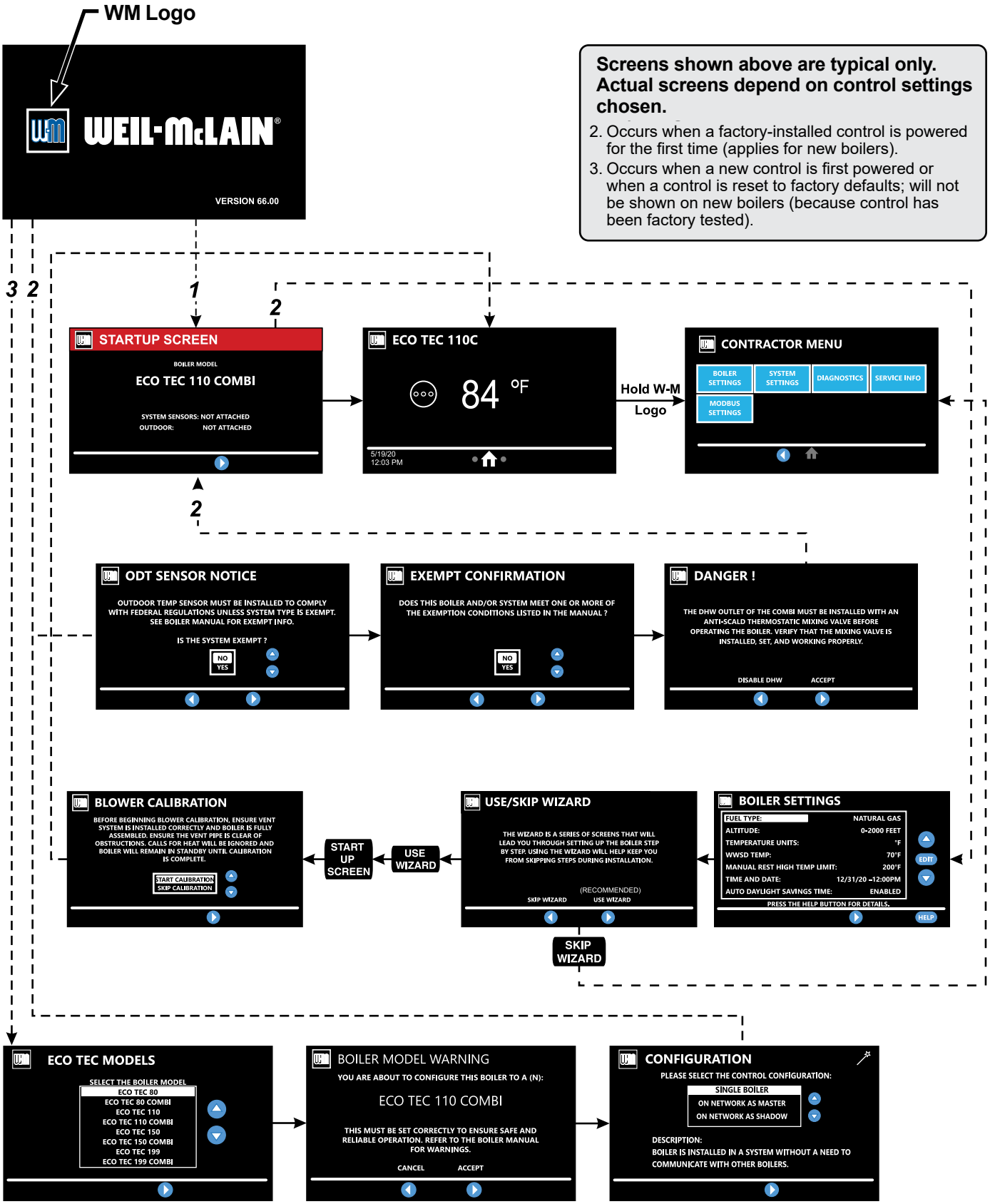

ECO Tec-001aCO

Control settings menus

Figure 21 **ECO Tec** control display screens and typical navigation – Advanced mode, multiple boilers

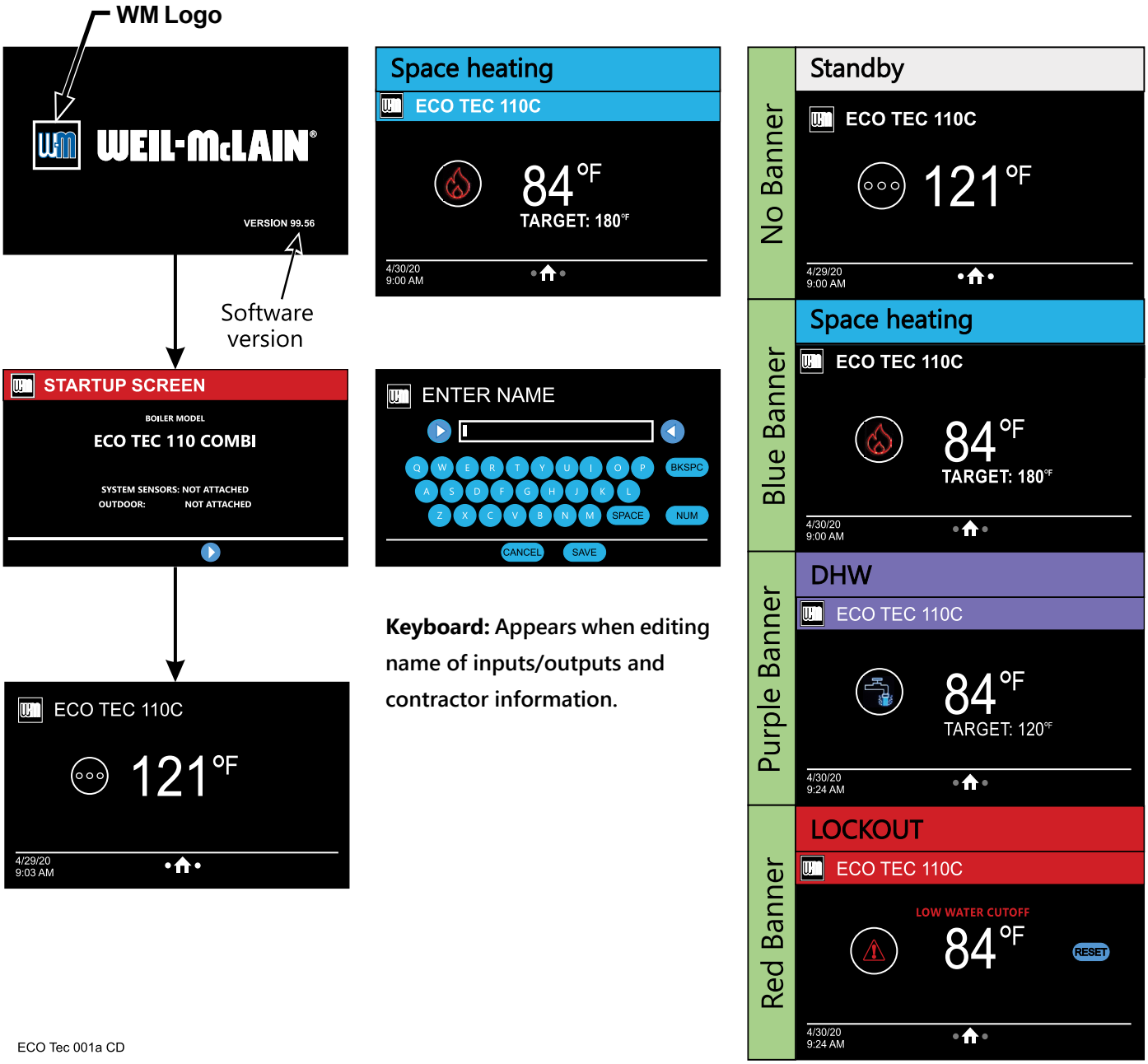

Navigation controls

Swipe: Slide finger left or right on the screen to navigate forward and backward on applicable screens.

Press: Touch icons on screen to perform specified action.

Scroll: Place finger on slide bar empty space and hold to scroll. Applicable screens can also be swiped up or down to scroll.

Double tap: Applicable on editable parameters. Allows user to enter edit mode by double tapping parameter.

Screens shown above are typical only. Actual screens depend on control settings chosen.

NOTICE See detailed information about controls settings (parameters) on the following pages.

Available control settings and system presets

Figure 22 **ECO Tec** Control / Priority settings

PRIORITY SETTINGS				
PARAMETER NAME	**Range/ options**	**Default setting**	**COMBI default**	**UNITS**
• ASSIGNED INPUTS	1, 2, 3, 4, 0-10V, FLOW	––	FLOW	––
• SYSTEM TYPE	See System Type Presets	OFF	COMBI DHW	––
• TARGET MODULATION SENSOR	SYSTEM SUPPLY, BOILER OUT, DHW OUT	SYSTEM SUPPLY if detected, Boiler Out if not	DHW OUT	––
• TARGET ADJUST	Outdoor Temp, 0-10V, none	Outdoor Temp (If attached)	None	––
• MAX TARGET TEMP	See System Type Presets	See System Type Presets	N/A	°F
• HOT WATER TEMP (COMBI ONLY)	See System Type Presets	N/A	120	°F
• MIN TARGET TEMP	See System Type Presets	See System Type Presets	N/A	°F
• COMBI ENABLED (COMBI ONLY)	ON, OFF	N/A	ON	-
• OUTDOOR TEMP FOR MIN TARGET	50 - 100	70	N/A	°F
• OUTDOOR TEMP FOR MAX TARGET	-20 to 49	0	N/A	°F
• VOLTAGE FOR MAX TARGET (TARGET ADJUST)	5.0 - 10.0	10.0	N/A	V
• VOLTAGE FOR MIN TARGET (TARGET ADJUST)	0.0 - 4.9	0.0	N/A	V
• TARGET BOOST TIME	OFF, 1 - 240	OFF	N/A	M
• SYSTEM SUPPLY OFF DIFF	5 - 15	10	N/A	°F
• DHW OFF DIFF	1 - 20	N/A	10	°F
• SYSTEM SUPPLY ON DIFF	5 - 30	10	N/A	°F
• DHW ON DIFF	1 - 20	N/A	1	°F
• MAX BOILER TEMP	60-185	Max Target Temp plus 5 °F	180	°F
• ADD BLR DIFF	2 to 10	5	N/A	°F
• DROP BLR DIFF	2 to 10	5	N/A	°F
• MOD DELAY TIME	1 to 15 minutes	2 minutes	N/A	––
• STABILIZE TIME	3 to 30 minutes	5 minutes	N/A	––
• ADD DELAY TIMER	30 to 240 seconds	60 seconds	N/A	––
• DROP DELAY TIMER	30 to 240 seconds	60 seconds	N/A	––
• BOILER OUT OFF DIFF	2 - 15	5	5	°F
• BOILER OUT ON DIFF	2 - 30	5	5	°F
• COLD START ERROR	0 - 150	50	N/A	°F

NOTICE See detailed information about controls settings (parameters) on the following pages.

Available control settings and system presets

Figure 23 **ECO Tec** Control / Priority settings *(continued)*

PRIORITY SETTINGS

PARAMETER NAME	Range/ options	Default setting	COMBI default	UNITS
• MAX ON TIME	OFF, 1 - 240	30	60	M
• MIN ON TIME	OFF, 1 - 240	15	N/A	M
• PREHEAT MODE (COMBI ONLY)	OFF, Economy, High Performance	N/A	Economy	––
• PREHEAT TEMP (COMBI ONLY)	70 - 180	N/A	120 (Econ), 140 (H. Perf)	°F
• PREHEAT CIRC DIFF (COMBI ONLY)	1 - 30	N/A	30 (Econ), 10 (H. Perf)	°F
• PREHEAT ON DIFF (COMBI ONLY)	1 - 30	N/A	10 (Econ), 5 (H. Perf)	°F
• PREHEAT OFF DIFF (COMBI ONLY)	1 - 30	N/A	10	°F
• ECO BOOST (COMBI ONLY)	OFF, ON	N/A	ON	––
• ECO BOOST SETPOINT (COMBI ONLY)	70 - 180	N/A	130	°F
• ECO BOOST ON DIFF (COMBI ONLY)	1 - 30	N/A	10	°F
• ECO BOOST OFF DIFF (COMBI ONLY)	1 - 30	N/A	10	°F
• RUN BOILER PUMP	YES, NO	Yes	Yes (unchangeable)	––
• RUN AUX/PUMP OUT	YES, NO	No	No	––
• PRE PUMP	OFF, 1 - 240	OFF	OFF	S
• POST PUMP	OFF, 1 - 240	30	10	S
• MAXIMUM RATE	11 - 100	100	100	%
• MINIMUM RATE	10 - 99	10	10	%
• ADDITIONAL HEAT DEMAND ACT CONTACT	OFF, 1ST, 2ND, Outdoor Temperature	OFF	N/A	––
• RESPONSE TIME	OFF, 1 - 240	OFF	N/A	M
• TEMP DEPENDENT	YES, NO	NO	N/A	––
• OUTDOOR TEMP SETPOINT	0 - 50	15	N/A	°F
• ACT CONTACT BELOW SETPOINT	1st, 2nd	1st	N/A	––

Available control settings and system presets

Figure 24 **ECO Tec** settings available

Menus and Items	Default setting	Range/options
• **MAX SYS MBH** *(Network priorities only)*	AUTO	AUTO or 100 to 32,000 MBTU's
• **MIN BOILERS** *(Network priorities only)*	1	1 to 8
• **MAX RATE VOLTAGE**	10.0	5.0 - 10.0
• **MIN RATE VOLTAGE**	1.0	0.0 -4.9
NETWORK SETTINGS (page 60)	**Default setting**	**Range/options**
• **CONTROL TYPE**	––	Single, Master, Shadow
• **BOILER ADDRESS**	––	1 to 8
• **THIS BOILERS NET MAX ON TIME**	30	Off, 1 to 240
• **THIS BOILERS NET MIN ON TIME**	15	Off, 1 to 240
• **THIS BOILERS MAX RATE ON NET**	96%	100% to 21%
• **THIS BOILERS MIN RATE ON NET**	20%	20% to 99%
ROTATION AND SEQUENCE (page 61)	**Default setting**	**Range/options**
• **SEQUENCE TYPE**	None	Smart, Parallel, Series
• **BASERATE HIGH**	N/A	Auto, 20% to 100%
• **BASERATE LOW**	N/A	20% to 100%
• **LEAD BOILER ROTATE**	Total Hours	Off, By Boiler, Total Hours, Incremental Hours
• **ROTATE FREQUENCY**	7	1-30, 60, 90, 120, 150, 180, 210, 240, 270, 300, 330, 365
• **FORCE LEAD ROTATE**	Yes	Yes, or No
• **CURRENT ORDER**	––	Shows current rotation sequence
	Default setting	**Range/options**
• **INPUT 1**	––	NONE or Single boiler – PRIORITY 1, 2, or 3 Master or shadow boiler – NETWORK PRIORITY 1 or 2 or LOCAL PRIORITY 1 or 2
• **INPUT 2**	––	
• **INPUT 3**	––	
• **INPUT 4**	––	
Diagnostics (see Boiler Manual)		
SERVICE (page 72)		

NOTICE See detailed information about controls settings (parameters) on the following pages.

Available control settings and system presets

Figure 25 System Type Presets (each option shown with factory settings)

System Type	8-Character Abbreviation	3-Character Abbreviation	Max Target Temp °F	Min Target Temp °F
Fan-coil	FAN-COIL	FCL	180	140
Finned Tube Baseboard	FIN BASE	FTB	180	130
Cast Iron Baseboard	IRONBASE	CIB	180	120
Cast Iron Radiators	RADIATOR	CIR	180	120
Radiant - slab on grade	RAD SLAB	RSG	120	80
Radiant - thin slab	RAD SLAB	RTS	140	80
Radiant - below floor (staple up)	RADFLOOR	RSU	160	90
Radiant - above floor (sleeper system)	RADFLOOR	RAF	140	90
Domestic Hot Water	DOMESTIC	DHW	180	N/A
Custom (user defined)	XXXXXXXX (user input)	first three of user input	180	70

HOMEOWNER NAVIGATION menus

WARNING **Boiler Model, Altitude and Fuel Type are critical settings.** Failure to set correctly could result in severe personal injury, death or substantial property damage.

1. Access contractor menus by pressing and holding the WM Logo for 7 seconds from the home screen.
2. See the following pages for explanations of control setting options.

Figure 26 ECO Tec Homeowner Navigation menu access — accessing Homeowner menus

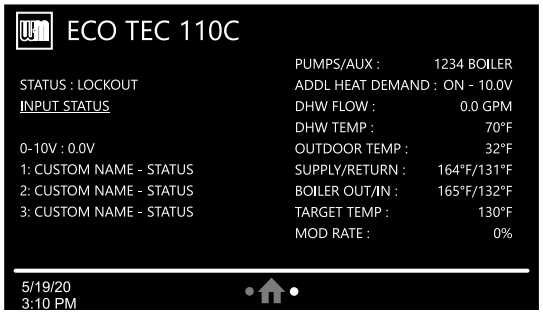

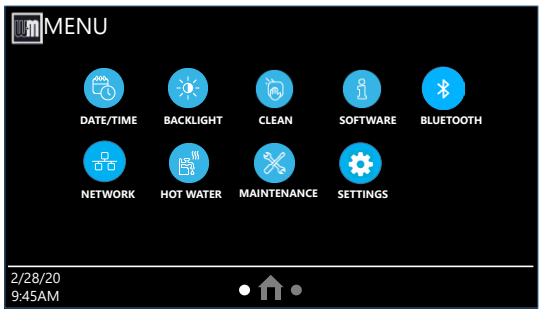

Screens shown above are typical only. Actual screens depend on control settings chosen.

MENU Item	PURPOSE
HOMEOWNER SCREEN	• Banner info • Status image • Fault name and reset button • Time/Date • Navigation buttons – 2 dots and Home • Current temperature • Target Temperature (when a priority is active)
BOILER INFORMATION SCREEN	• Status: Shows the current sequence of operation status with the active priority. • Input Status: Shows the current status of each call for heat. • 0-10v: Shows the current 0-10v input value from external device. • 1-4: Shows inputs 1 through 4, what they are assigned to, their custom names and their status. Input 4 will not show for Combi models. • Pumps/Aux: Shows which AUX PUMP/OUTPUTs are currently active. • Additional Heat Demand: Shows whether AHD is off or on. Only appears if a priority is selected to use AHD. • DHW Flow: Shows the current flow rate of the Combi DHW in GPM. Only visible for Combi models. • DHW Temp: Shows the current temperature of the Combi DHW sensor. Only visible for Combi models. • Outdoor Temp: Shows the current outdoor temperature sensor value. Only visible if selected to use. • Supply/Return: Shows the current System Supply and System Return temperature. Only visible if selected to use. • Boiler Out/In: Shows the current Boiler Out and Boiler In temperatures. • Target Temp: Shows the current Target Temperature of the active priority. • Mod Rate: Shows the modulation rate of the boiler's blower motor.
DATE/TIME BUTTON	• Allows user to edit the current date and time.
BACKLIGHT	• Allows user to edit how bright the screen is during normal operation and when dormant.
CLEAN	• Locks the screen so nothing can be pressed for 10 seconds while the user cleans the screen.
SOFTWARE	• Displays the current software revisions of the control and display, log file and fault file size.

HOMEOWNER NAVIGATION menus (continued)

WARNING **Boiler Model, Altitude and Fuel Type are critical settings.** Failure to set correctly could result in severe personal injury, death or substantial property damage.

1. Access contractor menus by pressing and holding the WM Logo for 7 seconds from the home screen.
2. See the following pages for explanations of control setting options.

Figure 27 ECO Tec Homeowner Navigation menu access — accessing Homeowner menus (continued)

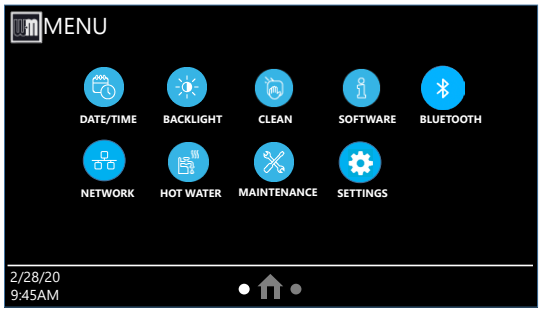

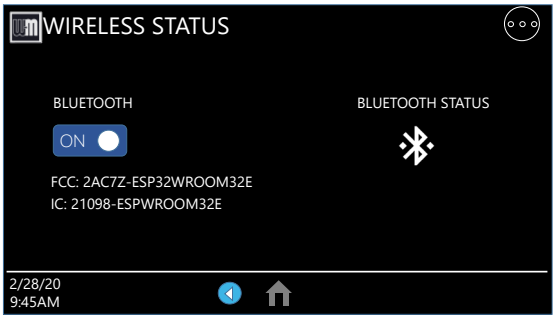

MENU Item	PURPOSE
BLUETOOTH **Assembled From tested components Complete system not tested**	• Allows the user to turn Bluetooth ON or OFF. Swipe right from HOME and press BLUETOOTH to reach FCC and IC information. • Bluetooth allows the user to connect remotely to the Weil-McLain ProTool app, where the user can wirelessly communicate to the boiler. The app functions include, but are not limited to, allowing the user to install the latest software for their boiler control, display and Bluetooth radio, gives quick access to boiler information, and provides contact information to WM Technical Services. FCC: Wireless device unique identifier registered with the U.S. Federal Communications Commission. IC: Wireless certification approval number unique to all devices, required for Canada. • This device complies with Part 15 of the FCC Rules. Operation is subject to the following two conditions: (1) this device may not cause harmful interference, and (2) this device must accept any interference received, including interference that may cause undesired operation.
NETWORK	• Shows all boilers on the Network, their current status, temperature and Mod Rate.
HOT WATER	• Allows the user to edit the Hot Water Temp of the Combi demand, as well as enable or disable PREHEAT mode or ECO BOOST.
MAINTENANCE	• Allows the user to view contractor and maintenance information, as well as reset the maintenance reminder when present.
SETTINGS	• Allows the user to edit temperature units, screen time out, daylight savings time and sound effect of presses.

Screens shown above are typical only. Actual screens depend on control settings chosen.

CONTRACTOR menus

WARNING **Boiler Model, Altitude and Fuel Type are critical settings.** Failure to set correctly could result in severe personal injury, death or substantial property damage.

1. Access contractor menus by pressing and holding the WM Logo for 7 seconds from the home screen.
2. See the following pages for explanations of control setting options.

Figure 28 ECO Tec Control menu access — accessing contractor menus

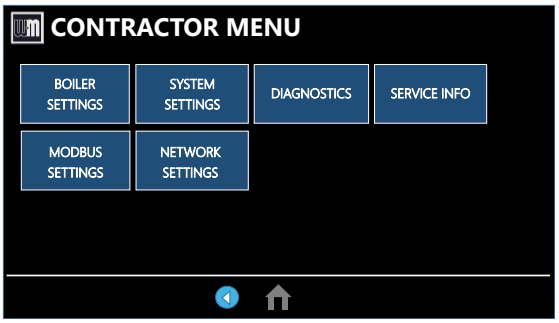

MENU Item	PURPOSE	More information
BOILER SETTINGS	• Set/change boiler model, control type, high altitude setting, Outdoor Temp sensor requirement, manual reset high limit and WWSD temperature settings, outdoor sensor temp adjustment, circulator exercising, freeze protection setup, and restore to factory default option, fuel type and blower calibration.	See page 59.
SYSTEM SETTINGS	• These settings assign Priority 1, 2 or 3 to each of the four inputs to the control and see an overview of assigned priorities.	See page 64.
DIAGNOSTICS	• Use to review current and historical information including previous lockouts.	See **ECO Tec** Boiler Manual.
SERVICE INFO	• Used to set contractor contact information, boiler information and maintenance dates.	See page 72.
MODBUS SETTINGS	• Used to adjust Modbus related settings such as Baud Rate, Parity and Stop Bits, Modbus Address and turning Modbus on/off.	See **ECO Tec** MODBUS Supplement.
NETWORK SETTINGS	• Used to adjust Max Time for Net, Min Time for Net, Max Rate for Net, Min Rate for Net and select Rotation and Sequence screen.	See page 60.

Screens shown above are typical only. Actual screens depend on control settings chosen.

BOILER SETTINGS menu

WARNING **Boiler Model, Altitude and Fuel Type are critical settings.** Failure to set correctly could result in severe personal injury, death or substantial property damage.

1. Access contractor menus by pressing and holding the WM Logo for 7 seconds from the home screen.
2. See the following pages for explanations of control setting options.

Figure 29 ECO Tec BOILER SETTINGS options

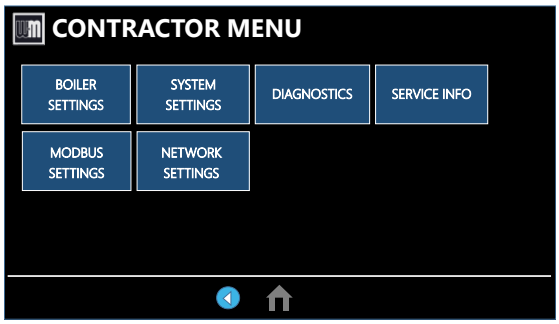

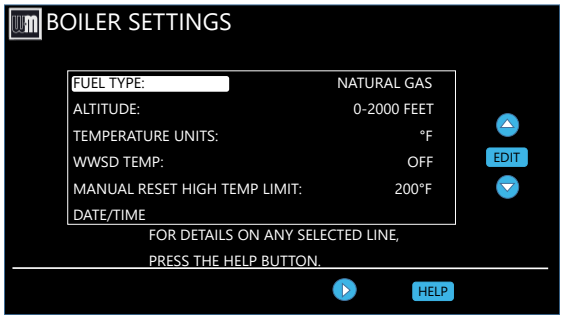

Screens shown above are typical only. Actual screens depend on control settings chosen.

MENU Item	DESCRIPTION
BOILER MODEL	• WARNING MUST be set to correct model. • Check the boiler model against the model listed on the boiler's rating plate. Change the selection to the correct model if not. Also verify the model number on the **ECO Tec** control display at power-up. Failure to correct would result in severe personal injury, death or substantial property damage.
FUEL TYPE	• WARNING MUST be correct — Select between Propane and Natural gas is used. Follow screen instructions to change if necessary.
ALTITUDE	• Must be set correctly if altitude is greater than 2,000 feet. Settings in 500 -foot increments.
OUTDOOR TEMP SENSOR EXEMPT	• Select YES only if boiler is exempt from the requirement for outdoor reset operation stipulated in Section 303 of the 2007 Energy Act. See information provided elsewhere in this manual.
MANUAL RESET HIGH TEMP LIMIT	• If boiler outlet water temperature exceeds this temperature, the **ECO Tec** control will shut down the boiler and enter lockout. Changing this setting is NOT recommended.
WWSD TEMP	• WWSD stands for warm weather shut down. It means the boiler will not be allowed to fire if the outdoor temperature is greater than the WWSD setting. When the boiler is kept off because the outdoor temperature is above WWSD, the graphic display will show WWSD, and the boiler will remain in standby until the outdoor temperature drops below WWSD temperature. WWSD does not apply to DHW systems or CUSTOM priorities. The outdoor sensor must be installed to use this function.
ADJUSTOUTDOOR	• Use this setting to calibrate the outdoor sensor when needed to compensate for variations in lead length or other factors that could affect total resistance in sensor circuit.
CIRCULATOR EXERCISING	• For each circulator, select whether you want the control to automatically start the circulator and run for 10 seconds for each 72-hour period of inactivity.
FREEZE PROTECT CIRCS	• This function automatically fires the boiler at low fire and starts the circulators chosen if the heat exchanger sensors detect a temperature less than 45° F. Burner is turned on if temperature drops below 40° F. Circulators and burner turn off when the temperature rises above 48° F.
BLOWER CALIBRATION	• Use this function to re-calibrate the blower motor for optimal blower performance. NOTE: All calls for heat must be off and boiler must be in "Standby" to use this function.
RESET FACTORY DEFAULTS	• This screen has two options. RESTART WIZARD keeps all contractor information, time and date, run times and errors, and boiler model and allows the user to restart the wizard from the beginning. RESET FACTORY DEFAULTS clears all information from the control including model number and returns the control to a factory received state.

NETWORK SETTINGS menu

WARNING **Boiler Model, Altitude and Fuel Type are critical settings.** Failure to set correctly could result in severe personal injury, death or substantial property damage.

1. Access contractor menus by pressing and holding the WM-Logo for 7 seconds.
2. See Figure 28, page 58 for the screen sequences up to the CONTRACTOR menu.

Figure 30 ECO Tec NETWORK SETTINGS menu (see Figure 28, page 58 to access CONTRACTOR menu - Network)

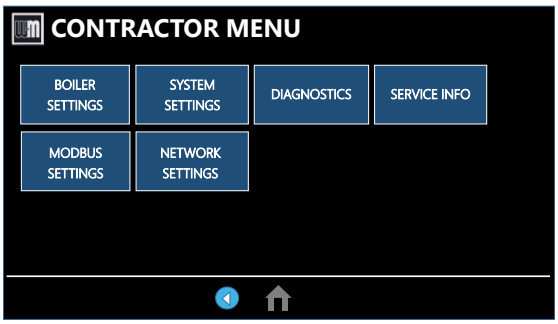

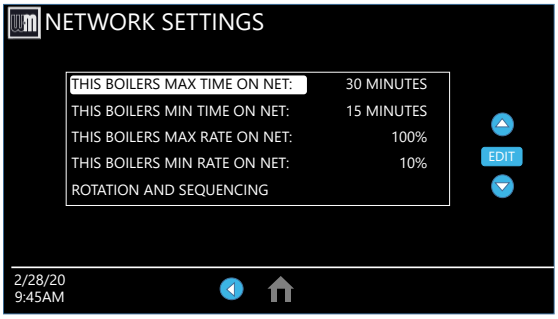

MENU ITEM	PURPOSE	More information
THIS BOILERS MAX TIME ON NET	• Maximum amount of time this boiler will operate on a network call for heat from the Master boiler before switching to a LOCAL PRIORITY 2 demand (if no LOCAL PRIORITY 1 demand is present).	None
THIS BOILERS MIN TIME ON NET	• Minimum amount of time this boiler will operate on a network call for heat from the Master boiler before switching to a LOCAL PRIORITY 1 demand.	None
THIS BOILERS MAX RATE ON NET	• Maximum rate the boiler will run at during NETWORK calls.	None
THIS BOILERS MIN RATE ON NET	• Minimum rate the boiler will run at during NETWORK calls.	None
ROTATION & SEQUENCE	• Select the method by which the boilers will turn on and off. • Choose between SMART, PARALLEL, or SERIES. (This setting is only accessible on Master boiler.)	See Figure 31, page 61 for explanation of sequencing options

Screens shown above are typical only. Actual screens depend on control settings chosen.

ROTATION AND SEQUENCE

WARNING **Boiler Model, Altitude and Fuel Type are critical settings.** Failure to set correctly could result in severe personal injury, death or substantial property damage.

1. Access contractor menus by pressing and holding the WM-Logo for 7 seconds.
2. See Figure 28, page 58 for the screen sequences up to the CONTRACTOR menu.

Figure 31 ECO Tec NETWORK SETTINGS menu (see Figure 28, page 58 to access CONTRACTOR menu)

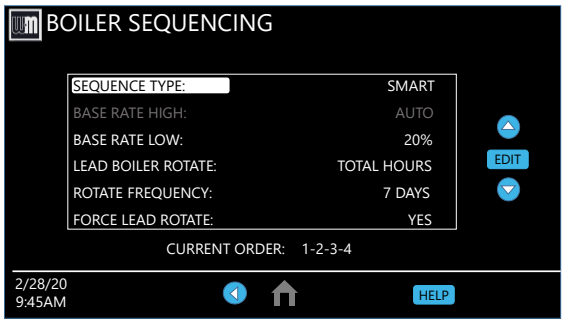

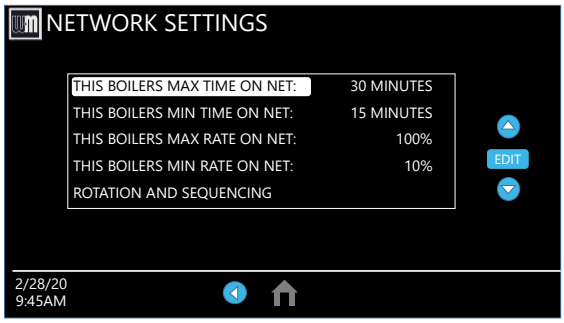

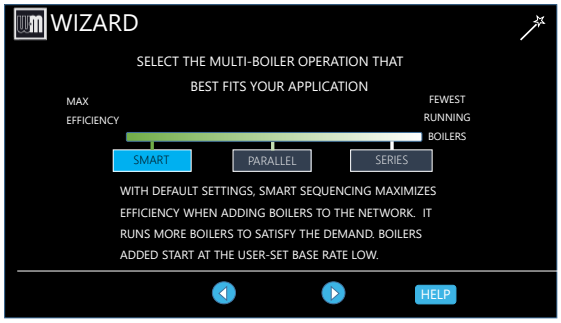

Screens shown above are typical only. Actual screens depend on control settings chosen.

MENU ITEM	PURPOSE
SEQUENCE TYPE	• Select the method of which the boilers will turn on and off. Choose between SERIES, PARALLEL, or SMART. **Sequencing** means the way in which boiler firing rate is controlled as boilers are turned on and off by the Master boiler. – With the default settings, **SMART SEQUENCING** maximizes efficiency when adding boilers to the network. It runs more boilers to satisfy the demand. Boilers added start at the user-set Base Rate Low. – With the default settings, **PARALLEL SEQUENCING** balances efficiency and number of boilers running. Each boiler modulates up to the user-set Base Rate High before adding another boiler. – With the default settings, **SERIES SEQUENCING** minimizes the number of boilers running. Each boiler modulates to its Max Rate before adding another boiler.
BASE RATE HIGH	• This sets highest modulation rate before turning on the next boiler. • In SMART mode this valve is automatically calculated. See Figure 32, page 62 for more information.
BASE RATE LOW	• This sets rate that the next boiler in sequence is going to turn on when called. • In PARALLEL/SERIES mode this valve is automatically calculated. See Figure 32, page 62 for more information.
LEAD BOILER ROTATE	• Choose how to rotate the boiler sequencing. Choose either OFF, BY BOILER ID, TOTAL HOURS, or INCREMENTAL HOURS. Firing sequence is changed every rotation period (ROTATE FREQUENCY – see setting explanation below).
	• OFF — Master boiler is always the first to fire. Others fire in the order of their network ID.
	• BY BOILER ID — Lead boiler toggles in the sequence of network ID numbers (changes from boiler number 1 to number 2, then boiler number 2 to number 3, etc.).
	• TOTAL HOURS — The boiler with the most ***lifetime*** operating hours is moved to the last in the firing sequence. The boiler with the least ***lifetime*** operating hours is made first in the sequence. Others are ordered by their respective ***lifetime*** operating hours.
	• INCREMENTAL HOURS — Firing sequence is based on the operating time ***during the previous rotation period***. The boiler with the least operating time is started first; the boiler with the most operating time is started last; all others are started in order of their operating time.
ROTATE FREQUENCY	• Recalculates the boiler order every ## days based on LEAD BOILER ROTATE setting.
FORCE LEAD ROTATE	• Select YES or NO. When the rotation frequency timer expires and the new order is calculated, this forces off the boiler lowest in the sequence. Then the boiler highest in the sequence fires to replace it.
CURRENT ORDER	• Shows the current firing order of the boilers on the network. • This list updates based on how many boilers are detected and the order of sequence based on the above settings. • Sequence is shown as left-most boiler is first to turn on. Right-most boilers are the first to turn off.

ROTATION AND SEQUENCE (continued)

Figure 32 ECO Tec sequencing options — SMART, PARALLEL or SERIES (examples shown for 3-boiler network)

SMART Sequencing	PARALLEL Sequencing	SERIES Sequencing
Fewest Running Boilers →		
← Max Efficiency		
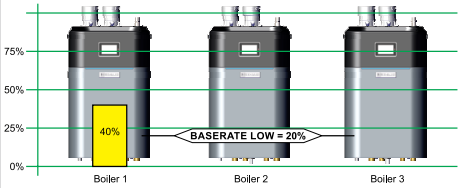	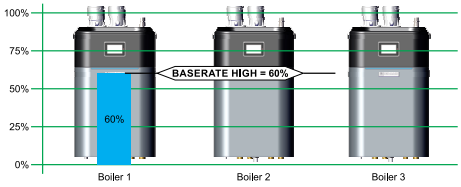	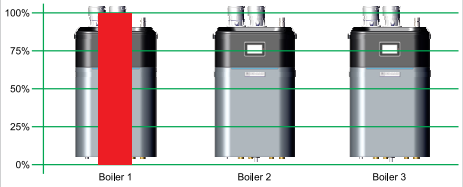
STAGE 1 – Lead boiler modulates up to a low firing rate before turning on the next boiler in the sequence. The STABILIZE TIME allows time for the boilers to modulate to meet system demand before turning on additional boilers.	STAGE 1 – Lead boiler modulates up to a maximum of Base Rate High before turning on the next boiler in the sequence. The STABILIZE TIME allows time for the boilers to modulate to meet system demand before turning on additional boilers.	STAGE 1 – Lead boiler modulates up to a maximum of 100% before turning on the next boiler in the sequence. The STABILIZE TIME allows time for the boilers to modulate to meet system demand before turning on additional boilers.
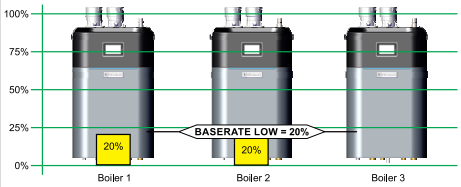	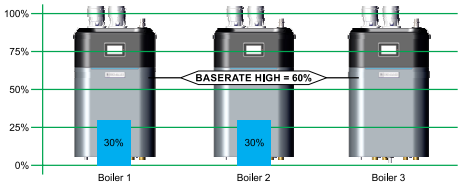	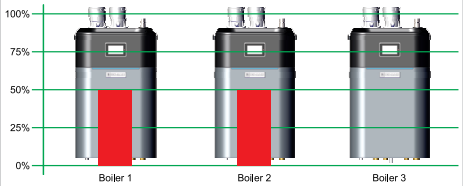
STAGE 2 – Boiler #2 in sequence ignites and both boilers modulate to BASE RATE LOW. After a short MOD DELAY TIME, the boilers will be released to modulate.	STAGE 2 – Boiler #2 in sequence ignites and both boilers modulate to so their combined energy output matches the energy output of Boiler #1 at Base Rate High. After a short MOD DELAY TIME, the boilers will be released to modulate.	STAGE 2 – Boiler #2 in sequence ignites and both boilers modulate to so their combined energy output matches the energy output of Boiler #1 at 100%. After a short MOD DELAY TIME, the boilers will be released to modulate.
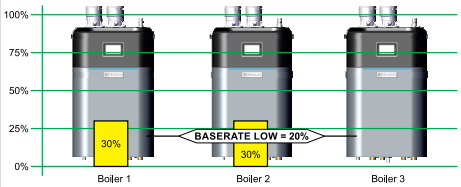	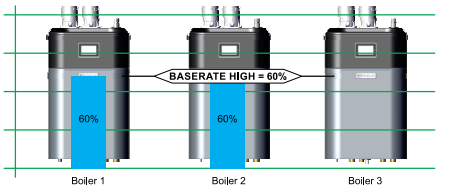	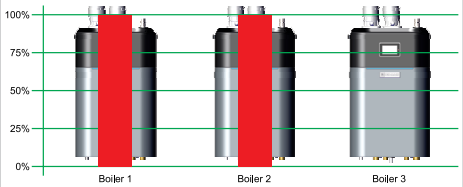
STAGE 3 – Both boilers modulate up to a low firing rate before turning on the next boiler in the sequence. The STABILIZE TIME allows time for the boilers to modulate to meet system demand before turning on additional boilers.	STAGE 3 – Both boilers modulate up to a maximum of Base Rate High before turning on the next boiler in the sequence. The STABILIZE TIME allows time for the boilers to modulate to meet system demand before turning on additional boilers.	STAGE 3 – Both boilers modulate up to a maximum of 100% before turning on the next boiler in the sequence. The STABILIZE TIME allows time for the boilers to modulate to meet system demand before turning on additional boilers.
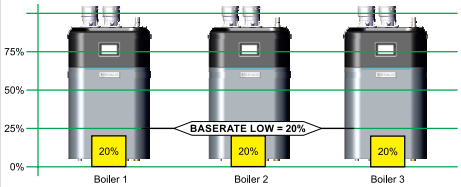	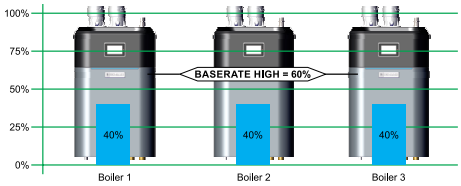	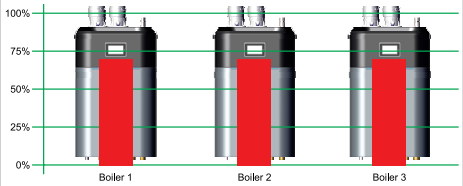
STAGE 4 – Boiler #3 in sequence ignites and then all boilers modulate to BASE RATE LOW. After a short MOD DELAY TIME, the boilers will be released to modulate.	STAGE 4 – Boiler #3 in sequence ignites and then all boilers modulate to so their combined energy output matches the energy output of Boilers #1 and #2 at Base Rate High. After a short MOD DELAY TIME, the boilers will be released to modulate.	STAGE 4 – Boiler #3 in sequence ignites and then all boilers modulate to so their combined energy output matches the energy output of Boilers #1 and #2 at 100%. After a short MOD DELAY TIME, the boilers will be released to modulate.
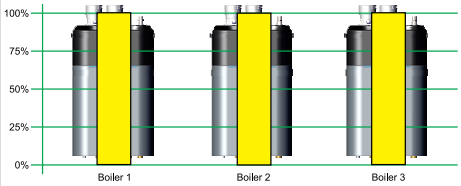	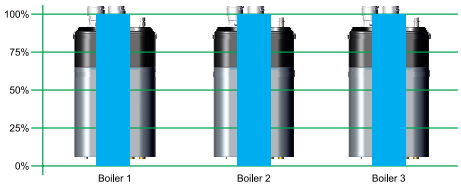	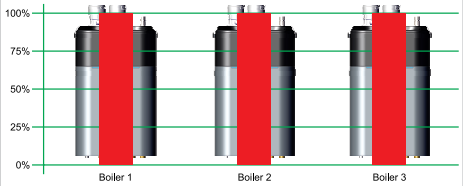
STAGE 5 – After all available boilers are firing, boilers are release to modulate up to 100% of rate.	STAGE 5 – After all available boilers are firing, boilers are release to modulate up to 100% of rate.	STAGE 5 – After all available boilers are firing, boilers are release to modulate up to 100% of rate.

ROTATION AND SEQUENCE (continued)

Figure 33 Boiler sequencing — adding and dropping boilers

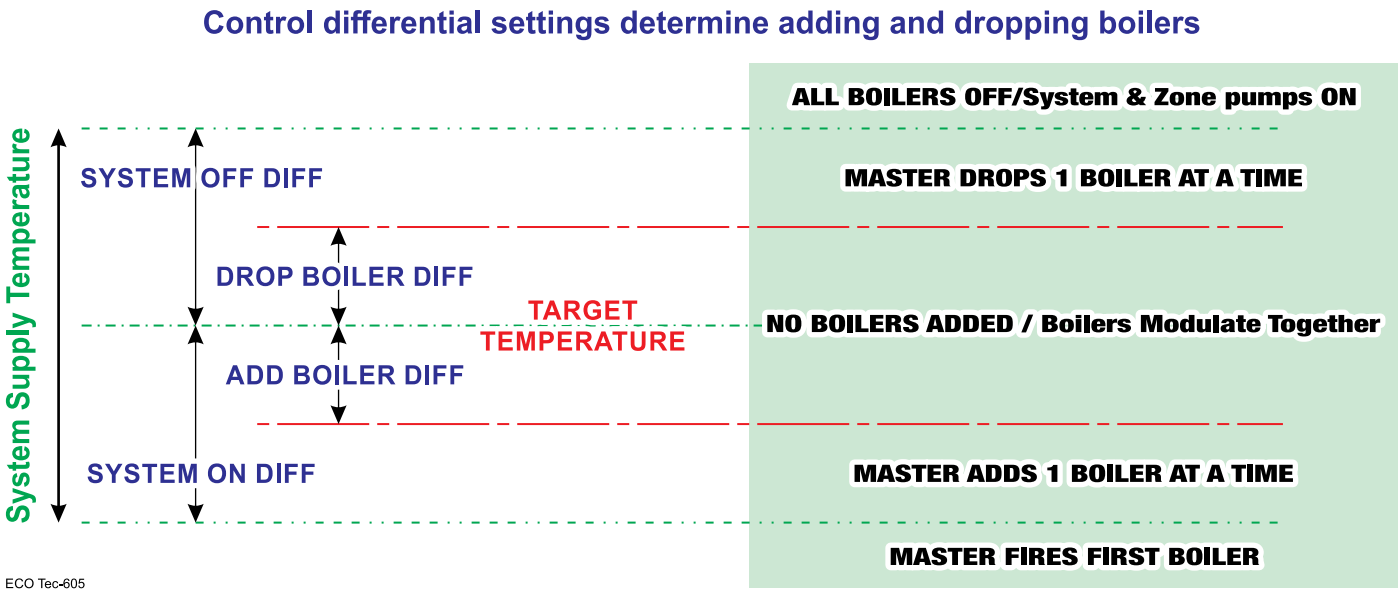

System Settings

WARNING **Boiler Model, Altitude and Fuel Type are critical settings.** Failure to set correctly could result in severe personal injury, death or substantial property damage.

1. Access contractor menus by pressing and holding the WM Logo for 7 seconds from the home screen.
2. See the following pages for explanations of control setting options.

Figure 34 System Settings menu options

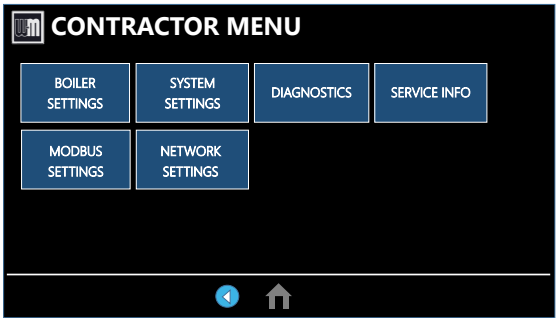

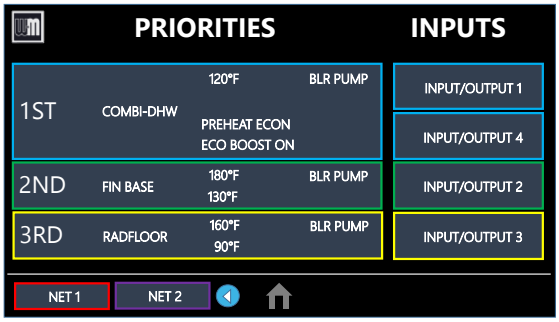

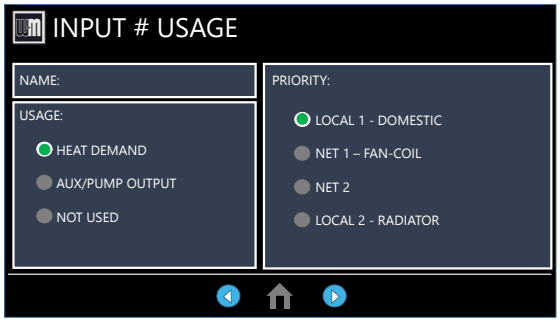

MENU Item	DESCRIPTION
INPUTS	• Press on any of the Input squares to navigate to the Input assignment screen. Assign priorities to inputs and the source of Input 2. • Custom name will appear above Input/output # when a name is entered.
PRIORITIES	• Press on any of the Priorities buttons to navigate to that priority settings. • Each box displays from left to right: the priority number, system type, Max Target Temp on top of Min Target Temp (when used), and populates BLR Pump and/or SYS PUMP when selected to run these during that priority. The color of the box corresponds to the color of the Input/output #.

Screens shown above are typical only. Actual screens depend on control settings chosen.

Network Boiler PRIORITY menu

⚠WARNING **Boiler Model, Altitude and Fuel Type are critical settings.** Failure to set correctly could result in severe personal injury, death or substantial property damage.

1. Access contractor menus by pressing and holding the WM Logo for 7 seconds from the home screen.
2. See the following pages for explanations of control setting options.

Figure 35 ECO Tec Network Boiler PRIORITY options

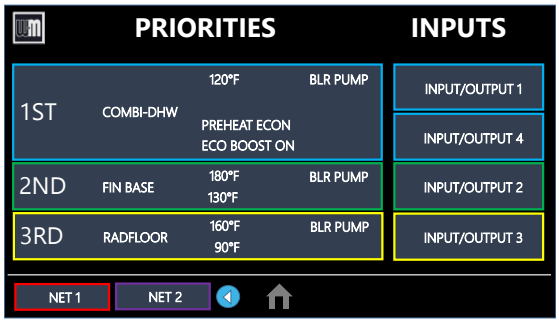

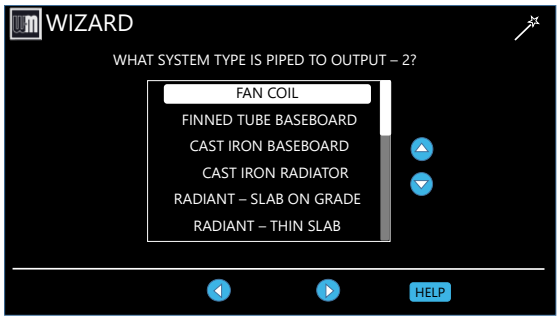

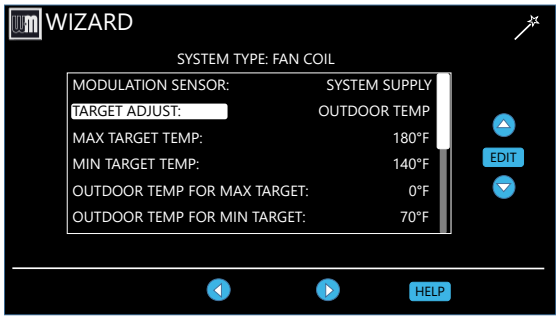

Screens shown above are typical only. Actual screens depend on control settings chosen.

MENU Item	DESCRIPTION
SYSTEM TYPE	• Select the system type for this PRIORITY, based on the heating terminal units in the system (see Figure 25, page 55). Use the CUSTOM selection to set the control for a different system type. The factory preset values for Max Target Temp, MIN TARGET TEMP, Outdoor Temp for Min Target and OUTDOOR TEMP FOR MAX TARGET are chosen based on the normal best setting for the terminal units.
TARGET MODULATION SENSOR	• Choose SYSTEM SUPPLY or BOILER OUT to determine which will be the primary temperature sensor. The control will modulate boiler input to reach the TARGET temperature. (Default is SYSTEM SUPPLY only if sensor is attached.) If system sensors are not used, boiler defaults to using boiler outlet sensor in place of system sensor. NOTE: Not adjustable on Combi DHW priority or Network Priorities.
TARGET ADJUST	• Select how target temperature is calculated by control: NONE (no reset, fixed target temperature), 0-10V (target temperature based on analog input from remote source), Outdoor Temp (outdoor reset operation; default setting when an outdoor temperature sensor is attached). NOTE: Not adjustable on Combi DHW priority.
MAX TARGET TEMP	• Set Max Target Temp to the required supply water temperature for the system at design maximum heat loss (typically 180° F for finned tube baseboard on new installations.) NOTE: Not adjustable on Combi DHW priority.
MIN TARGET TEMP	• MIN TARGET TEMP should equal the desired minimum supply water temperature for the system. • This line is not shown on priorities configured as DHW system type or Heating system type, if outdoor temperature sensor not used. NOTE: Not adjustable on Combi DHW priority.
OUTDOOR TEMP FOR MIN TARGET	• OUTDOOR TEMP FOR MIN TARGET is the outdoor temperature at which the target temperature reaches its minimum (MIN TARGET TEMP). • This line is not shown on priorities configured as DHW system type or Heating system type, if outdoor temperature sensor not used. NOTE: Not adjustable on Combi DHW priority.
OUTDOOR TEMP FOR MAX TARGET	• OUTDOOR TEMP FOR MAX TARGET means the outdoor temperature at which the target temperature reaches its maximum value (MAX TARGET TEMP). • OUTDOOR TEMP FOR MAX TARGET should equal the Outdoor Temp (outdoor design temperature) for the installation's location. • This line is not shown on priorities configured as DHW system type or Heating system type, if outdoor temperature sensor not used. NOTE: Not adjustable on Combi DHW priority.
VOLTAGE FOR MAX TARGET	• Only appears if Target Adjust or Source for Input 2 is set to 0-10V. For Target Adjust, this sets the voltage at which Max Target Temp temperature is requested. For Source on Input 2, this sets the voltage that corresponds to Max Rate.

Network Boiler PRIORITY menu (continued)

WARNING **Boiler Model, Altitude and Fuel Type are critical settings.** Failure to set correctly could result in severe personal injury, death or substantial property damage.

1. Access contractor menus by pressing and holding the WM Logo for 7 seconds from the home screen.
2. See the following pages for explanations of control setting options.

Figure 36 ECO Tec Network Boiler PRIORITY options

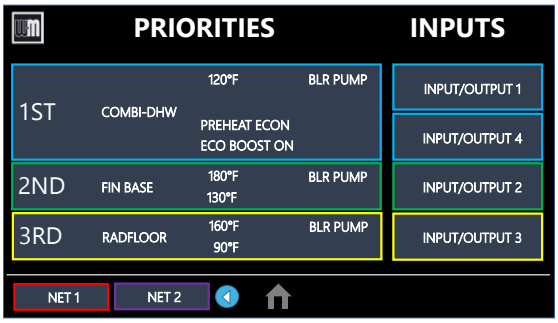

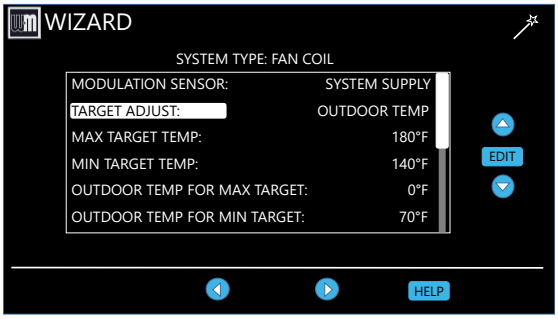

Screens shown above are typical only. Actual screens depend on control settings chosen.

MENU Item	DESCRIPTION
Voltage FOR Min Target	• Only appears if Target Adjust or Source for Input 2 is set to 0-10V. For Target Adjust, this sets the voltage at which Min Target Temp temperature is requested. For Source on Input 2, this sets the voltage that corresponds to Min Rate.
Cold Start Error	• At ignition, the difference between the Target temperature and the current temperature is compared to this value to decide the starting modulation rate once released to modulation. If the difference is less than or equal to this value the modulation rate will start at Min Rate. If it is greater than this value, the control will calculate a higher modulation starting rate. NOTE: Not adjustable on Combi or Network Priorities.
Hot Water Temp	• Set target temperature to the required Combi water temperature for the application according to design with mixing valve.
Combi Enabled	• Select whether to enable or disable Combi functionality. • Disabling Combi functions will ignore DHW flow calls for heat and only allow Central Heat on inputs 2 & 3 to service calls for heat.
DHW On Diff	• The DHW Outlet temperature must fall below the Hot Water Temp minus this value in order to proceed to ignition.
DHW Off Diff	• If the DHW Outlet temperature exceeds the Hot Water Temp plus this value, the burner will shut off.
PREHEAT Mode	• Select the mode of PREHEAT, between Off, Economy and High Performance.
PREHEAT Temp	• Select the target temperature of the PREHEAT functionality. The boiler will drive to this temperature until PREHEAT Off Diff is achieved, or is interrupted by a call for heat. • PREHEAT will end if Boiler Out and Boiler In exceed this temperature.
PREHEAT Circ Diff	• When in Standby, if the Boiler Out temperature falls below the PREHEAT Temp minus the PREHEAT Circ Diff, the boiler will activate the boiler circulator.
PREHEAT On Diff	• Temperature differential that is checked when Preheat starts due to temp falling below Circ Diff. Checks water temp to determine whether to stop Preheat or continue to turning on burner.
PREHEAT Off Diff	• While modulating on PREHEAT mode, if the Boiler Out temperature exceeds the PREHEAT Temp plus this value, the burner will shut off and PREHEAT mode will exit.
ECO BOOST	• Select whether or not to use the ECO BOOST feature. If conditions are met, the burner will continue to fire after Combi flow ends to recover temperature within the heat exchanger. • ECO Boost will end if Boiler Out and Boiler In exceed this temperature.
ECO BOOST Setpoint	• This setpoint is the temperature that will be driven to by the ECO BOOST.
ECO BOOST On Diff	• If a Combi DHW call for heat ends, the Boiler Out temperature is compared to the ECO BOOST Setpoint minus ECO BOOST On Diff. If below this value, the burner will continue to fire.
ECO BOOST Off Diff	• If firing due to ECO BOOST and the Boiler Out temperature exceeds the ECO BOOST Setpoint plus this value, the burner will shut off and ECO BOOST will end.

Network Boiler PRIORITY menus (continued)

WARNING **Boiler Model, Altitude and Fuel Type are critical settings.** Failure to set correctly could result in severe personal injury, death or substantial property damage.

1. Access contractor menus by pressing and holding the WM-Logo for 7 seconds.
2. See Figure 28, page 58 for the screen sequences up to the CONTRACTOR menu.

Figure 37 **ECO Tec** Network Boiler PRIORITY menus (access menus from CONTRACTOR menu

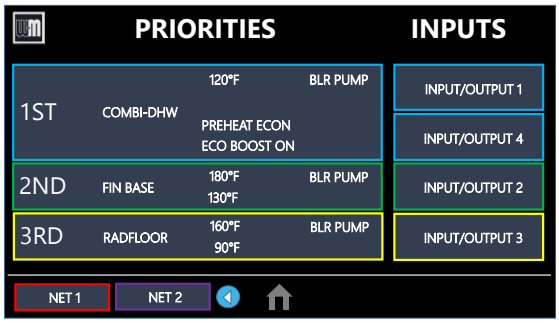

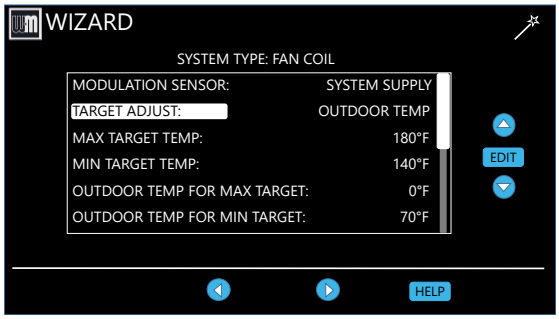

Screens shown above are typical only. Actual screens depend on control settings chosen.

MENU ITEM	DESCRIPTION
BOOST TIME	• Every time the call for heat surpasses this duration of time the target temp will increase (boost) up 10°F to a maximum temperature of SUPPLY MAX.
SYSTEM OFF DIFF	• This is the amount the temperature must rise above system target to turn the boiler(s) OFF.
SYSTEM ON DIFF	• This is the amount the temperature must drop below system target to begin network modulation routine. (This line may NOT appear, depending on TARGET ADJUST setting.)
ADD BLR DIFF	• If the system supply temperature has not reached target minus this differential at the end of the STABILIZE TIME, the control will turn on the next available boiler in the boiler firing order.
DROP BLR DIFF	• If the system supply temperature rises to more than target plus this differential, the control will turn off the last firing boiler in the boiler firing order. Drop Delay Timer limits how quickly multiple boilers drop off.
MOD DELAY TIME	• The time allowed for the boilers to adjust to the requested firing rate before beginning Stabilize Time and resuming modulation.
STABILIZE TIME	• The time allowed for all boilers actively heating a network priority to reach target modulation rate requested by the master. If the timer expires and system temperature is less than target – ADD BLR DIFF, the master will add the next available boiler. If there are no more available boilers, the master will freely modulate the boilers to satisfy the heat demand.
ADD DELAY TIMER	• Timer starts when the modulation rate of all boilers actively heating a network priority are at BASE RATE HIGH, MAX RATE FOR NET, or are being self-limited. If the timer expires and system temperature is less than target – ADD BLR DIFF, the master will add the next available boiler.
DROP DELAY TIMER	• Minimum time before a boiler will be dropped off. This timer only begins after the first boiler has been dropped. It applies as each additional firing boiler is dropped.
MAX BLR TEMP	• If the boiler outlet temperature approaches [MAX BOILER TEMP – BOILER ON DIFF] before the system supply temperature reaches its target, the control will modulate the boiler based on the boiler outlet temperature. The boiler will cycle and modulate based on the boiler ON and OFF differential settings. (This line does NOT appear if Target Mod Sensor is set to Boiler Out).
BOILER ON DIFF	• This is the amount the temperature must drop below target (or Boiler Max) to turn the boiler ON.
BOILER OFF DIFF	• This is the amount the temperature must rise above target (or Boiler Max) to turn the boiler OFF.
MAX ON TIME	• Maximum time boiler will run on this priority if it is being asked to run on another priority. Will rotate among all priorities its being asked to run. Network boilers are also controlled by MAX TIME FOR NET (see Figure 30, page 60). • NETWORK PRIORITY 1 only — Maximum time master will operate the network on NETWORK PRIORITY 1 if NETWORK PRIORITY 2 is calling for heat. • NOTICE When the master boiler detects a local call for heat from any boiler that is currently operating for a network demand, the master control will allow that boiler to switch to its local priority and replace the lost network energy of that boiler appropriately.

Network Boiler PRIORITY menus (continued)

WARNING **Boiler Model, Altitude and Fuel Type are critical settings.** Failure to set correctly could result in severe personal injury, death or substantial property damage.

1. Access contractor menus by pressing and holding the WM-Logo for 7 seconds.
2. See Figure 28, page 58 for the screen sequences up to the CONTRACTOR menu.

Figure 38 **ECO Tec** Network Boiler PRIORITY menus (access menus from CONTRACTOR menu (continued)

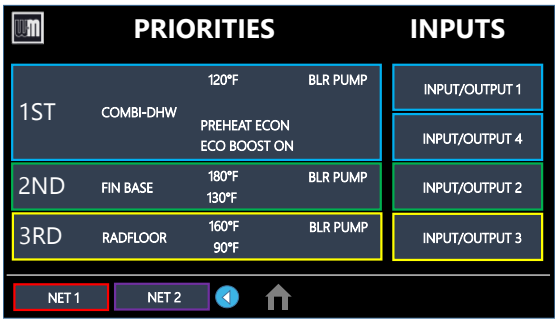

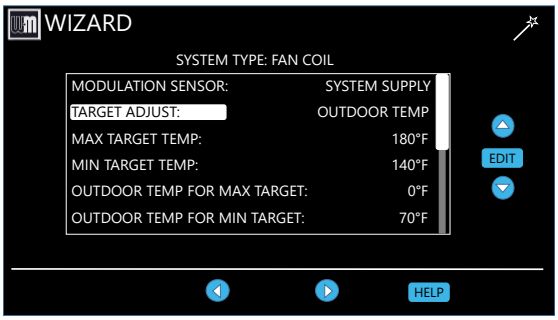

MENU ITEM	DESCRIPTION
MIN ON TIME	• Minimum time the boiler will run on an existing priority before switching to a lower priority, or back to an existing higher priority. If a new higher priority is called during MIN ON TIME, the boiler will immediately switch to actively heat the higher priority. Network boilers are also controlled by MIN TIME FOR NET (see Figure 30, page 60). • NETWORK PRIORITY 2 only — Minimum time master will operate on a network priority 2 if network priority 1 is calling for heat.
RUN BOILER PUMP	• Selects whether the Boiler Pump is turned on while running on this priority.
RUN AUX PUMP/OUTPUT	• When set to YES, input/output pairs on any network boiler assigned as AUX PUMP/OUTPUT -> ANY TT INPUT BY ITS PRIORITY, will activate. Set this to NO for priorities that do not need this AUX PUMP/OUTPUT to be active.
PRE PUMP	• Time associated PUMPS and AUX PUMP/OUTPUT are run before entering prepurge.
POST PUMP	• Time associated PUMPS and AUX PUMP/OUTPUT are run after the call for heat has ended and before switching to another call for heat.
MAX SYS BTUs	• Limits the energy allowed by the boiler network to be put into this priority's system. The default is set to AUTO (the sum of all network boiler sizes). If the total size of the boiler network is too large for a system, adjust MAX SYS MBH lower to the appropriate energy. MAX SYS MBH can be set greater than AUTO if more **ECO Tec** boiler are planned to be installed to the same network. This setting can be adjusted in 100 MBH increments (100 MBH = 100,000 BTU/hours).
MIN BOILERS	• The Master turns on this many boilers in the network on an initial call for heat in order to avoid delays due to accumulative wait times between boilers. When switching to another network priority, MIN BOILERS is re-evaluated based on the other priority's setting.
MAX RATE	• Maximum rate this boiler will modulate up to while running on this priority. • These are only adjustable for single/local priorities, and network boiler rates should be adjusted in the Network Settings menu.
MIN RATE	• Minimum rate this boiler will modulate down to while running on this priority. • These are only adjustable for single/local priorities, and network boiler rates should be adjusted in the Network Settings menu.

Screens shown above are typical only. Actual screens depend on control settings chosen.

Network Boiler PRIORITY menus (continued)

WARNING **Boiler Model, Altitude and Fuel Type are critical settings.** Failure to set correctly could result in severe personal injury, death or substantial property damage.

1. Access contractor menus by pressing and holding the WM Logo for 7 seconds from the home screen.
2. See the following pages for explanations of control setting options.

Figure 39 **ECO Tec** Network Boiler PRIORITY menus (access menus from CONTRACTOR menu (continued)

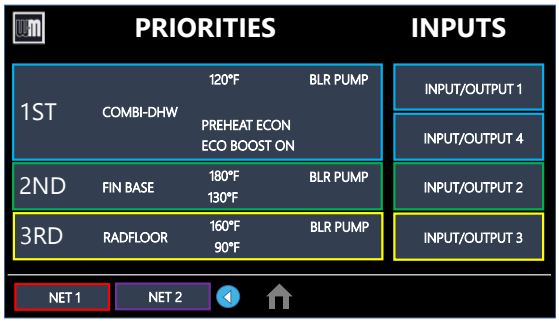

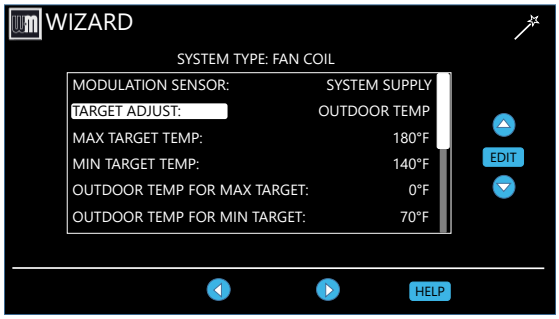

Screens shown above are typical only. Actual screens depend on control settings chosen.

MENU Item	DESCRIPTION
ADD'L HEAT DEMAND ACTIVATE CONTACT	• If this is set to 1st: Immediately on a call for heat, the heat demand contacts close and the RESPONSE TIME timer starts. If the call for heat from this demand is still active at the end of the Response Time and the system has not reached [Target Temp - System On Diff], the boiler system will start. If the system temperature is within this range, the boiler system will not start unless the temperature drops below this value. The add'l heat demand contact opens when the heat demand turns off. • If this is set to 2nd: The boiler system starts immediately on a call for heat and starts the RESPONSE TIME timer. If the call for heat is still active when the RESPONSE TIME expires, the boiler will close its additional heat demand contact. • If this set to ODT: The boiler system will start based on the Outdoor Temperature, the activate contact below setpoint and the Outdoor Temp setpoint valve. • Timers reset when priorities are switched. • NETWORK PRIORITY 1 or 2 — The additional heat demand must be wired to the master boiler. • LOCAL PRIORITY 1 or 2 — The additional heat demand must be wired to the individual boiler. A master boiler cannot use additional heat demand on a local priority.
RESPONSE TIME	• Time to wait for system to respond before taking the Activate Contact action. If ACTIVATE CONTACT is OFF, this line does not appear.
TEMP DEPENDENT	• Selecting YES will require the System Supply Temperature to be below the Target temperature before it will activate the Additional Heat Demand contacts. Selecting YES will also activate the 0-10v output along side the contacts. Selecting NO will disregard System Supply Temperature and activate AHD contacts strictly according to the Activate Contact setting. **NOTE:** If no valid System Supply and Return sensor pair are detected the Temp Dependent YES setting cannot be used and the contact will be disabled until a valid sensor pair is detected.
OUTDOOR TEMPERATURE SETPOINT	• Selecting the outdoor temperature valve to be used in conjunction with the Activate Contact Below Setpoint setting. **NOTE:** A valid outdoor temperature sensor must be detected to use this feature. If one is not detected, this feature will be temporarily disabled until one is found
ACTIVATE CONTACT BELOW SETPOINT	• Select 1st to activate the contact before the boiler when below the Outdoor Temperature Setpoint and after the boiler when above. Select 2nd to activate the contact in reverse order.
MAX RATE VOLTAGE	• When blower modulation is at maximum the control will output this voltage from 0-10v output when using Additional Heat Demand.
MIN RATE VOLTAGE	• When blower modulation is at minimum the control will output this voltage from 0-10v output when using Additional Heat Demand.

AUX Pump/Output

WARNING **Boiler Model, Altitude and Fuel Type are critical settings.** Failure to set correctly could result in severe personal injury, death or substantial property damage.

1. Access contractor menus by pressing and holding the WM Logo for 7 seconds from the home screen.
2. See the following pages for explanations of control setting options.

Figure 40 AUX PUMP/OUTPUT operation

Option	Activation conditions	Suggested uses
ALWAYS ON	• Output is always energized whenever the control is powered.	• Hot loop for seasonal boilers that are manually shut down at end of season and started up at start of heating season.
EXTERNAL SWITCH	• The output is energized on closure of an external switch wired to this input and is de-energized when the external switch opens.	• Hot loop for boilers whose CH is manually shut down at end of season and started up at start of heating season, but remain available for local calls (DHW, etc.).
OUTDOOR BELOW WWSD	• This output is energized only when outdoor temperature is below the WWSD setting (see BOILER SETTINGS menu). • This setting is non-selectable if WWSD is set to OFF or Outdoor Temp is not connected at initial boiler power. If Outdoor Below WWSD is already chosen and WWSD is later set to OFF, Outdoor Below WWSD will behave as Always On.	• Hot loop for boilers whose CH is automatically shut down based on outdoor temperature (inferred heat loss), but remain on for local calls (DHW, etc.).
ANY INPUT	• The assigned output is energized if there is an input closure on this boiler. • The assigned output will de-energize once there are; no input on this boiler, post-purge has finished and post-pump time has expired. • If the closed input is configured for a heat demand, its output will de-energize after post-purge and post-pump.	• Energize a system pump relay if pump must run during all heating calls.

INPUT PRIORITY SETTINGS	• The assigned output is energized:
	  • If there is an input closure on this boiler.
	  . . . **and** . . .
	  • RUN AUX PUMP/OUTPUT is set to YES for the priority assigned to the closed input.
	• The assigned output will de-energize once there are no input closures on any of the network boilers, post-purge has finished, and post-pump time has expired.
		• Energize a system pump relay if pump must run only on some heat calls (such as systems with locally-connected DHW heating).

SYSTEM DAMPER	• The assigned output is energized when the boiler receives a call for heat and starts to pre-purge. • The assigned output is de-energized once the burner is off and post-purge is complete. • Energizes any time any boiler on the network receives a heating demand or AHD is activated	• Use for interlocking with combustion air damper, flow switch, etc.
LOCAL DAMPER	• The assigned output is de-energized once the burner is off and post-purge is complete. • Only activates if this boiler is attempting to fire.	• Use for interlocking with combustion air damper, flow switch, etc.

Figure 41 SYSTEM/LOCAL DAMPER operation — start, run and stop, based on boiler status

Option	Standby	TT Closed	Pre-Pump	Pre-Purge	Burner Running	Post-Purge	Post-Pump	Standby	Comments
ANY INPUT OR INPUT PRIORITY SETTINGS	*off*	*ON* →	→	→	→	→	→	*off*	• See Figure 40 for explanation of differences between the ANY TT INPUT options.
SYSTEM/LOCAL DAMPER	*off*	*off*	*off*	*ON* →	→	→	*off*	*off*	

NETWORK INPUTS menu

WARNING **Boiler Model, Altitude and Fuel Type are critical settings.** Failure to set correctly could result in severe personal injury, death or substantial property damage.

1. Access contractor menus by pressing and holding the WM-Logo for 7 seconds.
2. See Figure 28, page 58 for the screen sequences up to the CONTRACTOR menu.

Figure 42 ECO Tec NETWORK SETTINGS menu (see Figure 28, page 58 to access CONTRACTOR menu - Network)

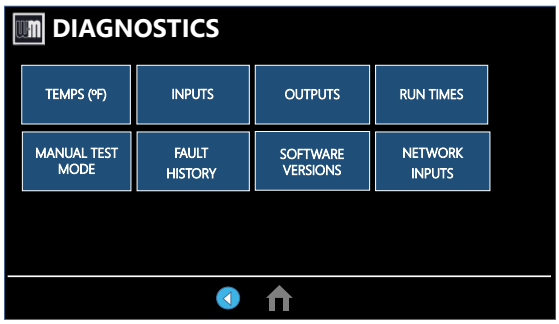

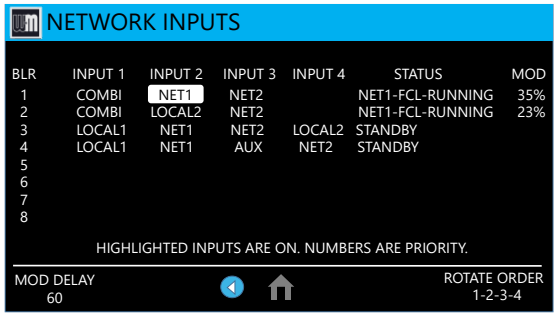

MENU Item	DESCRIPTION
NETWORK INPUTS	• Network inputs allow users to see all boilers on the network and what inputs they have active.
ROTATION ORDER	• Shows the current rotation order of the system.
NETWORK STATE & TIMER	• Timer shows maximum remaining time this state can be active. • Shows the current state of the Network's call for heat. • Waiting for burner means the Network is attempting to add the first boiler to the Network. • Mod Delay is the period where the boiler holds modulation rate to bring all boilers to same rate. • Stabilization is the period where the boilers attempt to reach Base Rate High. When this expires, a boiler will be added to the Network. • Added boiler shows once Base Rate High is achieved. When this expires, another boiler will be added to the Network.

Screens shown above are typical only. Actual screens depend on control settings chosen.

SERVICE menus

Figure 43 SERVICE menus — navigation

Service Info	Comment
Name	Contractor name to appear in maintenance reminders and during lockouts.
Phone	Contractor phone number.
Model	Displays the boiler model selected in the boiler setup.
CP Number	Enter the Consumer Protection (CP) number of the boiler.
Installed	Enter the date the boiler was installed.
Last Maintenance Performed	Date automatically entered when Reset Reminder is chosen by contractor.
Next Maintenance Due	Date automatically calculated when Reset Reminder is selected by contractor.
Interval Settings	Contractor selects maintenance reminder frequency based on service history.
Reset Reminder	Contractor selects this to update Last maintenance Date and Next Date. Homeowner uses this to ignore the reminder and update only the Next Date.
Last Calibration Date	Displays the date of last calibration preformed.

SERVICE INFO

Use this section to enter contractor's information, Consumer Protection (CP) number, install date and to enter an automatic notice for maintenance (default is 12 months). Because this shows on the display, it is an automatic means of notifying the homeowner of need for scheduled maintenance by the technician. Select RESET REMINDER to reset for the next maintenance date.