Weil–McLain
LGB–9 Water

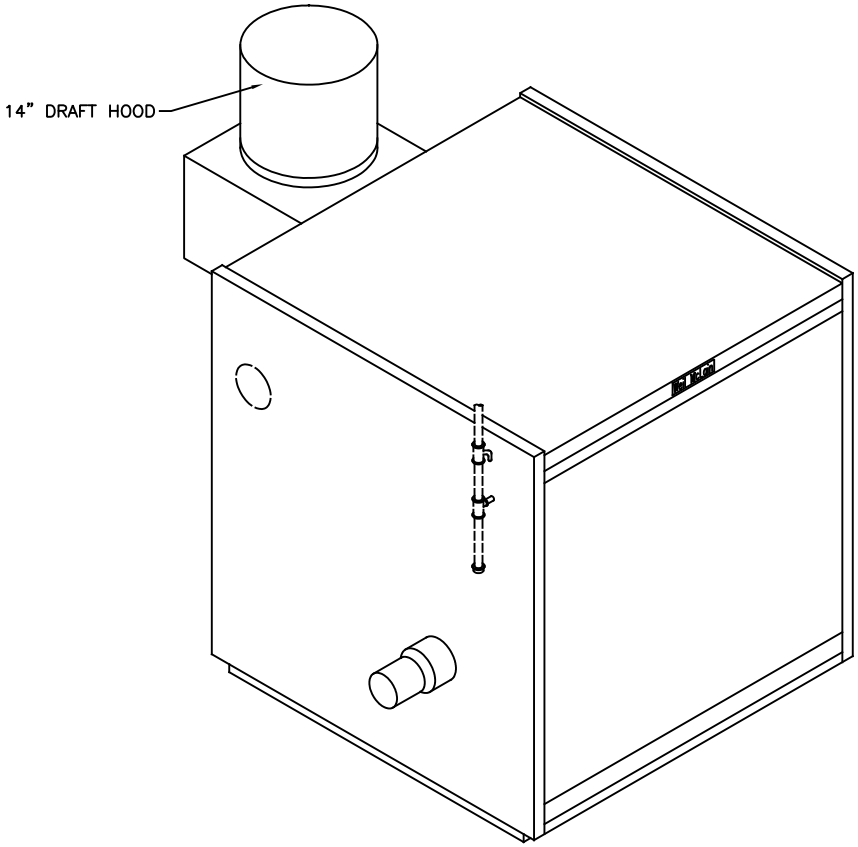

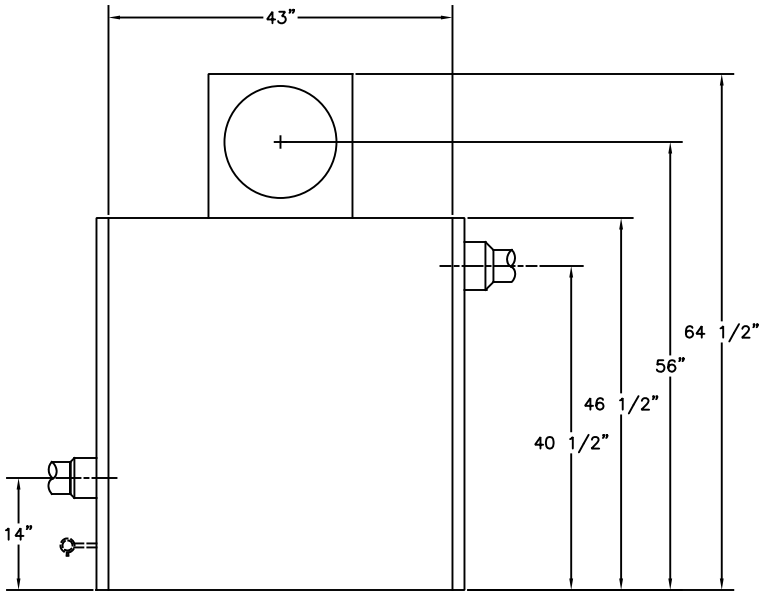

TOP

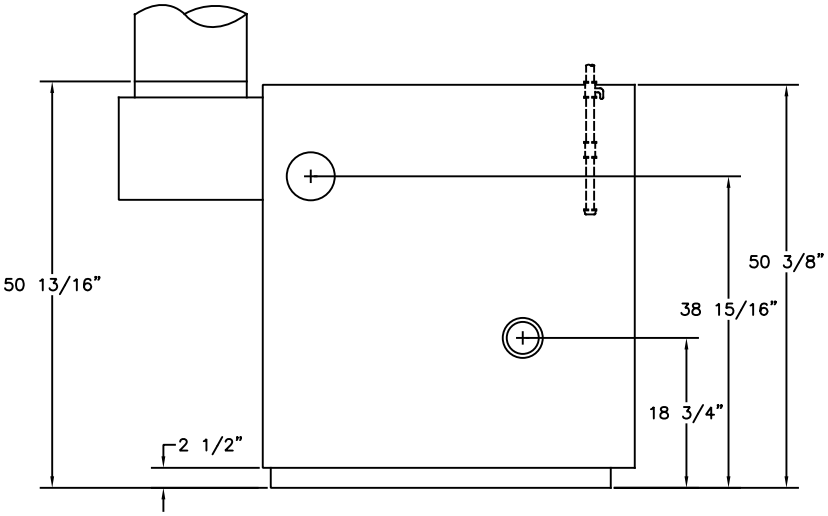

LEFT

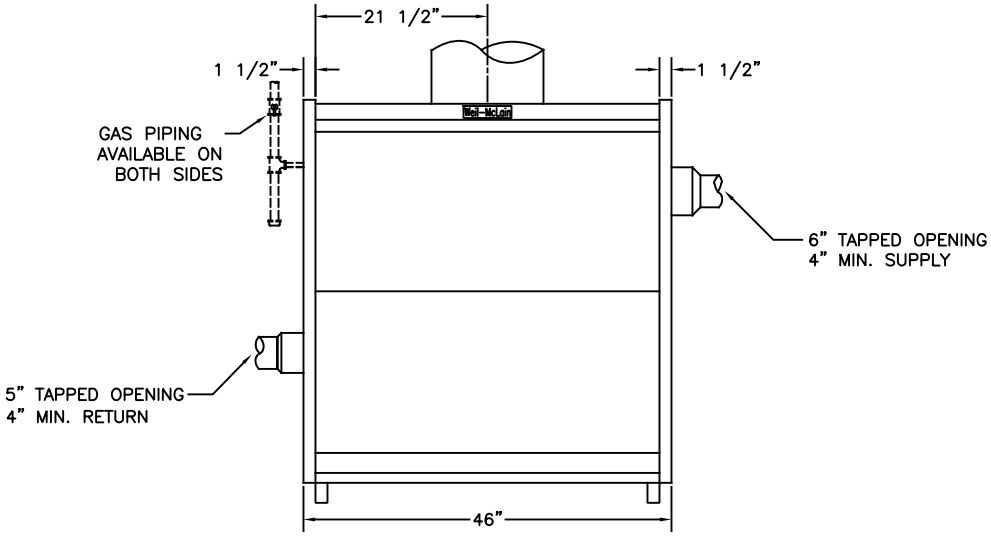

FRONT