Weil–McLain
LGB–13 Water

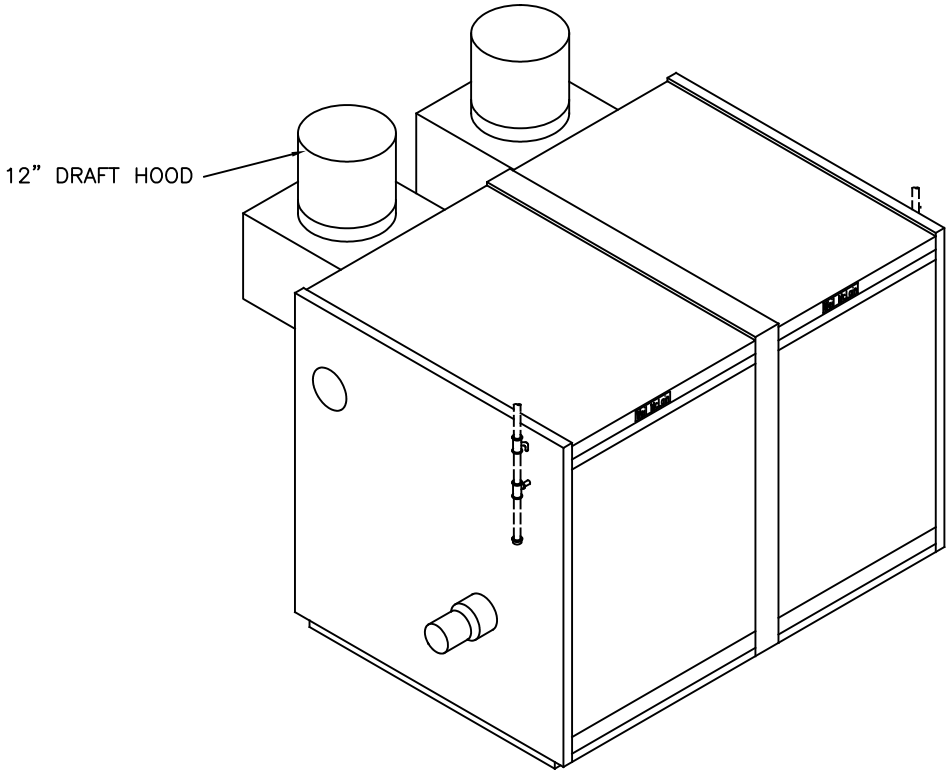

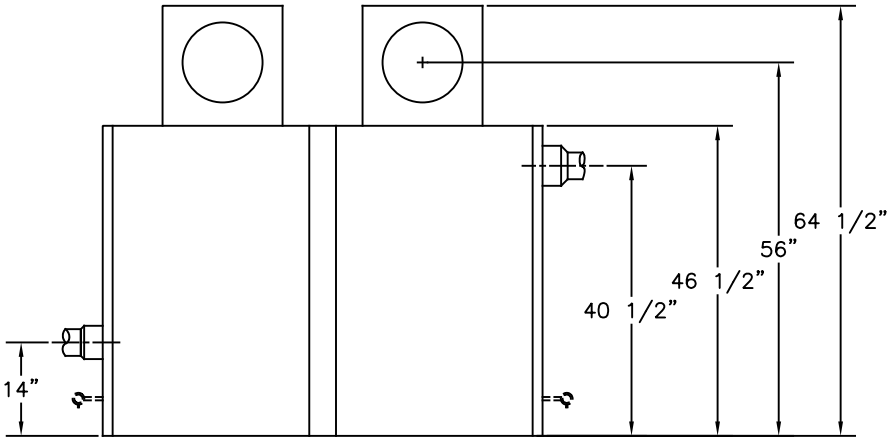

TOP

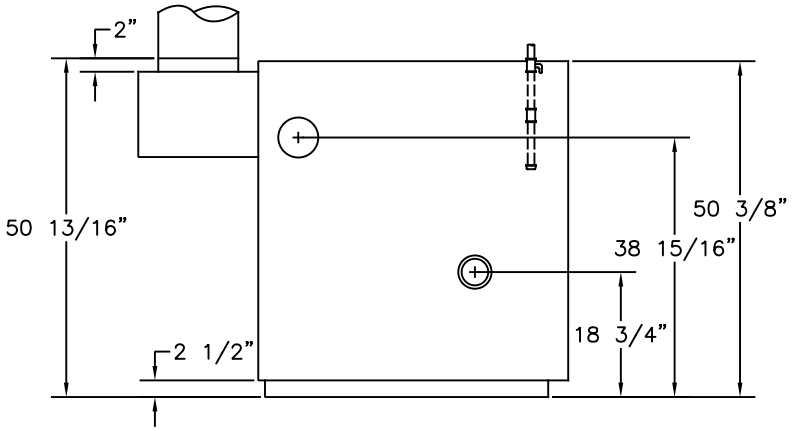

LEFT

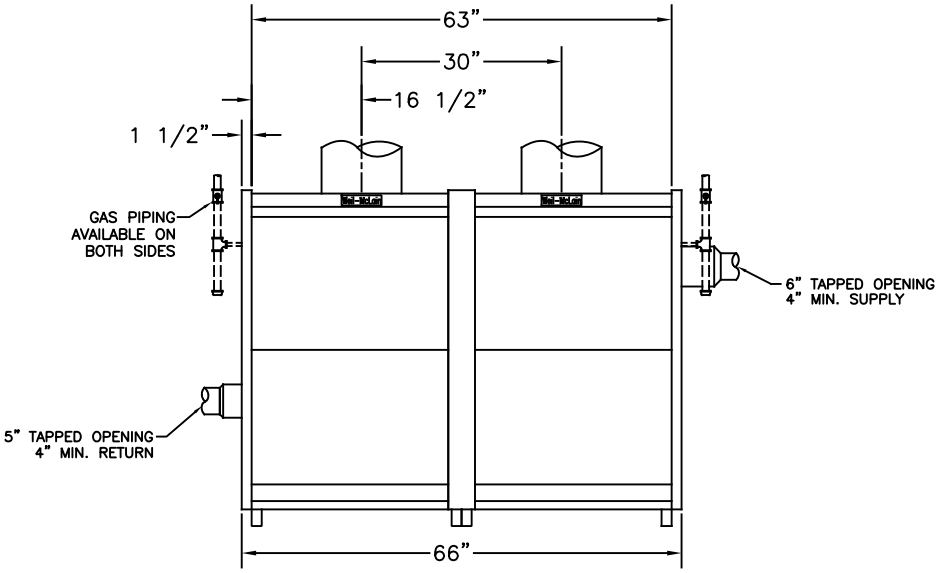

FRONT